BRAKING®

POWER UNDER CONTROL

CATALOGO
2015
CATALOGUE

Braking è...

... passione e adrenalina.

... in pista al fianco dei piloti nei campionati Mondiali velocità, fuoristrada e supermotard.

... nei box accanto ai tecnici e agli ingegneri per trovare nuove soluzioni, per vincere nuove sfide.

... dove i centesimi di secondo fanno la differenza.

... un insieme di elementi.

... passione e innovazione. Passione per le moto, per le alte prestazioni. Innovazione per creare nuovi standard qualitativi, per superare i limiti, per raggiungere un nuovo primato.

... tecnologia e qualità. Tecnologia per rendere i sogni accessibili. Qualità per farli durare a lungo.

... nelle competizioni mondiali ed è sulle moto di tutti i giorni.

... presso i migliori rivenditori in tutto il mondo.

...sul podio anche quest'anno per la 96ª volta.

Braking is...

... passion and adrenaline.

... on the track beside the riders in the road, off-road and supermoto worldwide Championships.

... at the boxes beside the technicians and engineers finding new solutions, to win new challenges.

... where the hundreds of second make the difference.

... a whole of elements.

... passion and innovation. Passion for bikes, for high performance. Innovation for creating new quality standards, for going beyond the limits, for achieving a new record.

... technology and quality. Technology for making dreams accessible. Quality for making them long lasting.

... in the World competitions and on every day bikes.

... at the best dealer shops all over the world.

...on top of the podium, winning 96 World Championships.

> www.braking.com

FIND US ON

INDEX / INDICE

> 004-008

PRODOTTI/PRODUCTS

MOTO/BIKES

> 009-157

> 158-263

DISCHI/DISKS

KIT DISCHI & PASTIGLIE/DISKS & PADS KIT p. 243
KIT MAGGIORAZIONE/OVERSIZE KIT p. 244-252
KIT RICAMBIO/REPLACEMENT KIT p. 252

PASTIGLIE DI RICAMBIO/REPLACEMENT PADS p. 410

PASTIGLIE/PADS

> 264-413

> 414-421

SUPPORTI PINZA/CALIPER BRACKETS

KIT RICAMBIO/REPLACEMENT KIT p. 421

KIT RICAMBIO/REPLACEMENT KIT p. 428

POMPE & LEVE
MASTER CYLINDERS & LEVERS

> 422-428

> 429

RICAMBI KIT RUOTA
WHEEL KIT REPLACEMENT

TUBAZIONI & RACCORDI
TUBES & FITTINGS

> 430-431

WHY BRAKING? / PERCHÉ BRAKING?

Racing

96 Campionati Mondiali vinti. Per chi vuole esattamente gli stessi prodotti usati dai campioni del Mondo. Il meglio della tecnologia a disposizione dell'utente finale. I migliori Partner per garantire qualità e performance: Nissin e Sunstar.

96 Winning World Championships. For those who want the same products used by the top World Champions. The best tecnology available to all users. The best Partners to guarantee quality and Performance: Nissin and Sunstar.

Challenge

"Challenge - la trasformazione"
Per chi vuole customizzare la propria moto con ricambio di qualità maggiore rispetto all'originale.
Dedicato a chi viaggia e a chi vuole differenziarsi nel moto turismo.

"Challenge - upgrade"
For Those who want the best products to customize their motorcycle, with better quality than original replacements parta.
For those who travel and want to look "different" in the tourism world.

Urban

"Urban - il ricambio"
Per chi vuole un ricambio con la stessa qualità dell'originale.
Siamo gli specialisti del ricambio nel frenante e nella trasmissione.
Offriamo il servizio, il prezzo e un marchio riconosciuto come originale.

"Urban - replacement"
For those who want replacement parts with the same quality as the original products. We are specialists for brake and drive systems.
We offer service, price and a brand well-known worldwide as original.

96 TITOLI VINTI / WINNING 96 WORLD TITLES

2014
96 AMA Pro Superbike
Josh Hayes (Team Monster Energy Graves Yamaha)
95 World Supersport
Michael Van Der Mark (Team Pata Honda)
94 AMA National MX 250
Jeremy Martin (Yamalube Star Racing Yamaha)
93 MX Women's
Chiara Fontanesi (Team Fontana Racing)

2013
92 STK 600
Franco Morbidelli (San Carlo Team Italia)
91 AMA Superbike
Josh Herrin (Team Monster Energy Yamaha Graves)
90 EWC
Matt Phillips (Team Husqvarna Monster E. Ch Racing)
89 WMX
Chiara Fontanesi (Team Fontana Yamaha Racing)

2012
88 AMA Superbike
Josh Hayes (Team Monster Energy Yamaha Graves)
87 Lucas Oil AMA 250 Pro Motocross
Blake Baggett (Team Kawasaki Pro Circuit)

2011
86 Enduro Classe EJ (Junior)
Jeremy Joly (Team Honda HM Zanardo)
85 Enduro Classe E3
Mika Ahola (Team Honda HM Zanardo)
84 Enduro Classe E1
Juha Salminem (Team Husqvarna Azzalin)
83 AMA SBK
Josh Hayes (Yamaha Factory)
82 AMA Motocross
Dean Wilson (Team Kawasaki Pro Circuit)
81 E2 Enduro
Antoine Meo (Husqvarna)
80 World MX3
Bill Julien (Honda)
79 AMA Supercross Lites Western Region
Brock Tickle (Team Monster Energy Kawasaki Pro Circuit)

2010
78 AMA Superbike
Josh Hayes (Team Yamaha Graves Motorsport)
77 Supersport
Kenan Sofuoglu (Team Hannspree Ten Kate Honda)
76 Enduro Classe E1
Antoine Meo (Team Husqvarna CH Racing)
75 Enduro Classe E2
Mika Ahola (Team Honda HM Zanardo)
74 AMA Champion Supercross Lite W. Region
Jake Weimer (Team Monster Energy ProCircuit)
73 AMA Supercross Lite Eastern Region
Christophe Pourcel (Team Monster Energy Kawasaki Pro Circuit)

winning 96 WORLD TITLES

PARTNERSHIP

BREVETTI / PATENTS

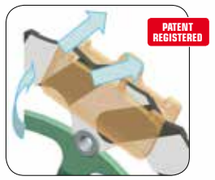

Le fresate alterne create sui due lati del disco facilitano il meccanismo di autoventilazione del disco.

CARATTERISTICHE > VANTAGGI
- autoventilazione > coefficiente di frenata costante in tutte le condizioni
- pressione specifica estremizzata > capacità di frenata massima
- minor peso > migliore maneggevolezza

Alternative grooves are created on both surfaces of the disk creating a self-ventilation mechanism.

FEATURES > BENEFITS
- self-ventilating > constant friction coefficient at all conditions
- very high contact pressure > highest braking grip
- light weight > better handling

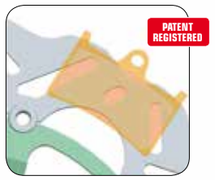

Il diametro interno ed esterno del disco con profilo non tondo migliora l'espansione radiale del disco in condizioni di stress termico estremo, inoltre la molteplicità di spigoli facilita il processo di ravvivamento delle pastiglie freno.

CARATTERISTICHE > VANTAGGI
- molteplicità di spigoli > migliore progressività
- pressione specifica maggiore > migliore capacità di frenata
- capacità di dissipazione calore > coefficiente di frenata costante in tutte le condizioni
- minor preso > migliore maneggevolezza

Outer and inner diameter of the disk have a non-round design to enable better radial expansion of the rotor under extreme heat conditions, moreover edges are set to grow brake pad regeneration process.

FEATURES > BENEFITS
- multiple tuned edges > progressive response
- higher contact pressure > more braking grip
- better heat dissipation > constant friction coefficient at all conditions
- less weight > better handling

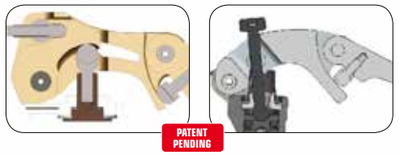

Grazie all'innovativo sistema brevettato CAM CONTROL, il movimento della leva è trasmesso al pistone attraverso una superficie a camma che si traduce in una progressione non lineare, ottimale per le competizioni.

LE CARATTERISTICHE INTRODOTTE DA QUESTO SISTEMA SONO
- il braccio di leva varia in funzione del movimento della leva
- la forza esercitata sulla leva è trasmessa totalmente al pistone in direzione assiale alla camera
- la regolazione meccanica è separata dalla funzionalità idraulica
- sostituendo la camma in dotazione con una con differente profilo è possibile adattare la pompa a differenti condizioni di utilizzo (*optional in fase di sviluppo)

Thanks to the new patented CAM CONTROL system, the lever movement is transmitted to the piston through a cam surface, thus creating a non linear progression, perfect for competitions.

THE CHARACTERISTICS OF THIS SYSTEM ARE
- The lever arm changes according to the lever movement
- The force applied on the lever is completely transmitted to the piston with an axial direction towards the chamber
- The mechanical regulation is separated from the hydraulic function
- When you replace the given cam with one having a different profile, it is possible to adapt the master cylinder to different using conditions (*optional - to be developed)

DISKS / Dischi

ONROAD & SUPERMOTARD

BATFLY STRADA

BATFLY® STRADA presenta un mozzo direzionale più leggero del precedente riducendo i nottolini da 12 a 9 e con la sede direzionale con angolo di 14° e una nuova geometria di pista autoventilante che migliora la dissipazione del calore sulla pista stessa.

BATFLY® STRADA offers a directional carrier, lighter than the previous version - 9 instead of 12 rivets, a directional seat with a 14° angle and a new outline for the self-ventilating outer ring, which improves the heat dissipation on the ring.

SK2

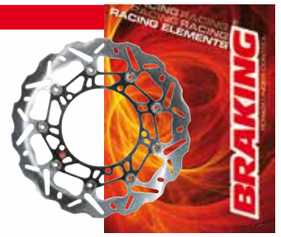

SK2 presenta un mozzo direzionale del 9% più leggero del precedente, una nuova geometria di pista risultato della collaborazione con i più forti team del mondo e con una sede nottolino direzionale con angolo di 14°.

SK2 has a directional carrier, which is 9% lighter than the previous one, a new profile for its outer ring thanks to cooperating with the strongest teams in the world, and a directional seat with a 14° angle.

BATFLY ENDURO

Il nuovo disco BATFLY® ENDURO offre l'unicità della tecnologia batfly BRAKING®. La progressione della potenza frenante è unica.

The new ENDURO BATFLY® disk features BRAKING® original BATFLY® technology. Unique progression of brake power. Specific for enduro application.

W-FLO

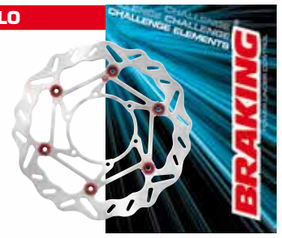

Il disco flottante WAVE® gamma economica con mozzo in acciaio.
Intercambiabile con il disco originale.

The entry level WAVE® floating disk with steel carrier. Replacement of original OEM disks.

W-FIX

Disco WAVE® tradizionale fisso per applicazioni anteriori e posteriori.
Ricambio del disco originale.

Traditional WAVE® fix disk for both front and rear applications.
Replacement of original OEM disk.

R-STX

Il classico disco tondo con mozzo in alluminio.

The classic round disk with aluminium alloy carrier.

R-FLO

Il disco flottante base con mozzo in acciaio.
Ricambio del disco originale.

The entry level floating disk with steel carrier.
Replacement of original OEM disks.

R-FIX

Disco tondo fisso tradizionale per applicazioni anteriori e posteriori.
Ricambio del disco originale.

Traditional round fix disk for both front and rear applications.
Replacement of original OEM disks.

DISKS / Dischi

OFFROAD

BATFLY ALUMINIUM

Il disco BATFLY® con profilo WAVE® subisce ora un'ulteriore evoluzione da vero "CAMPIONE"!! Le fasce frenanti vengono ora proposte con soluzioni di fissaggio al mozzo e alla pista in alluminio ad alte prestazioni.

The BATFLY® rotor with WAVE® profile reaches a new evolution. The brake rotors outer track mounts to the newly designed carrier at 6 points; both the carrier and the rivets are now aluminum instead of stainless steel which reduces weight.

S3 BATFLY

Il disco BATFLY® con profilo WAVE® viene ora proposto con un'ulteriore evoluzione per adattarsi alle richieste dei piloti più esperti.

The BATFLY® rotor with WAVE® profile gets upgraded & appeals to the most demanding off road riders in the world.

W-FLO

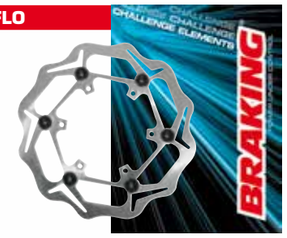

6 volte campione del mondo, il nuovo W-FLO contiene il brevetto WAVE®. Con un nuovo design e un mozzo completamente temprato, si è ridotto il rischio di ostruzioni da sassi. Peso imbattibile!

6 times world champion, the new W-FLO features WAVE®. With a new design of fully heat treated carrier, it has reduced the risk of stone obstructions. Unbeatable weight!.

W-FIX

Disco tradizionale WAVE® fisso per applicazioni anteriori e posteriori.

Traditional WAVE® fix disk for both front and rear applications.

W-FULL

Disco WAVE® fisso pieno per applicazioni posteriori.

WAVE® fix disk for rear applications.

R-FIX

Disco tondo fisso tradizionale per applicazioni anteriori e posteriori.

Traditional round fix disk for both front and rear applications.

DISKS / Dischi

SCOOTER

W-FLO

Disco flottante WAVE® campione del mondo disponibile anche per applicazioni scooter.

The world-champion WAVE® floating disk for scooter applications.

S3

Nuovo disco WAVE® semiflottante.

The new semi-floating WAVE® disk.

W-FIX

Disco WAVE® fisso tradizionale per applicazioni anteriori e posteriori.

Traditional WAVE® fix disk for both front and rear applications.

R-FLO

Il disco flottante base con mozzo in acciaio. Ricambio del disco originale.

The entry level floating disk with steel carrier. Replacement of original OEM disks.

R-FIX

Disco tondo fisso tradizionale per applicazioni anteriori e posteriori.
Ricambio per applicazioni originali.

Traditional round fix disk for both front and rear applications.

ATV

W-FIX

Disco WAVE® fisso tradizionale per applicazioni anteriori e posteriori.

Traditional WAVE® fix disk for both front and rear applications.

R-FIX

Disco tondo fisso tradizionale per applicazioni anteriori e posteriori.

Traditional round fix disk for both front and rear applications.

CRUISER

HUMMER

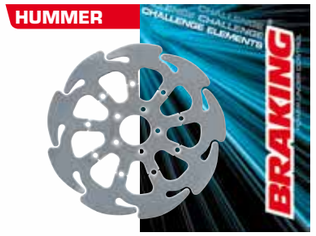

Il classico disco WAVE® per applicazioni custom con finitura lucida. Applicazioni anteriori e posteriori.

The classic WAVE® disk for cruiser applications with lapping polished finishing after grinding. Both front and rear applications.

R-FLO

Il disco flottante gamma base con mozzo in acciaio. Ricambio dei dischi originali. Applicazioni anteriori e posteriori.

The entry level floating disk with steel carrier. Replacement of original OEM disks. Both front and rear applications.

R-FIX

Disco tondo fisso tradizionale per applicazioni anteriori e posteriori.

Traditional round fix disk for both front and rear applications.

PADS / Pastiglie

ONROAD & SUPERMOTARD

P1R

Pastiglia racing con la miglior performance di durata e grip.

SBK class racing pad with best bite-durability performance.

CM66

La pastiglia racing con il grip maggiore. Durata limitata.

The racing pad with the strongest bite. Limited durability.

CM55 CM56

Pastiglia sinterizzata per utilizzo in più condizioni. Offre una prestazione di frenata costante e una ridotta usura. Mescola apprezzatissima. No uso racing.

Sintered metal brake pad for large range of conditions. It provides a stable brake performance and low wear rate. Top seller compound. Do not use for racing.

SM1

Mescola base semi-metallica. Prestazione morbida, potente, e priva di attrito. Ricambio per applicazioni originali. No uso racing.

Entry level semi-metallic compound. Smooth, powerful, quiet and non-grabbing performance. Do not use for racing.

OFFROAD

CM46

Questa mescola offre una prestazione in frenata potente, costante e senza fading anche in codizioni racing estreme. combinazione perfetta con i dischi batfly.

This compound provides a powerful, consistent and fade-free brake performance under extreme racing conditions. Perfect combination with Batfly disks.

CM44

Pastiglie freno sinterizzate per molteplici condizioni di utilizzo (fango o sabbia, sole o pioggia). Offre una frenata costante e una ridotta usura sia in pista che per l'utilizzo nel fuoristrada.

Sintered metal brake pad for large range of conditions (mud or sand, sun or rain). It provides a stable brake performance and low wear rate on the race track as well as off-road.

SM1

Mescola base semi-metallica. Prestazione morbida, potente, e priva di attrito. Ricambio per applicazioni originali. No uso racing.

Entry level semi-metallic compound. Smooth, powerful, quiet and non-grabbing performance. Do not use for racing.

SCOOTER

CM55

Pastiglia sinterizzata per utilizzo in più condizioni. Offre una prestazione di frenata costante e una ridotta usura. Mescola apprezzatissima. No uso racing.

Sintered metal brake pad for large range of conditions. It provides a stable brake performance and low wear rate. Top seller compound. Do not use for racing.

P30

Tecnologia sinterizzata all'avanguardia per un equilibrio perfetto tra performance e durata.

State of the art sintered technology for good balance between performance and durability.

SM1

Mescola base semi-metallica. Prestazione morbida, potente, e priva di attrito. Ricambio per applicazioni originali. No uso racing.

Entry level semi-metallic compound. Smooth, powerful, quiet and non-grabbing performance. Do not use for racing.

PADS / Pastiglie

CRUISER

CM77 CM88

Pastiglia freno sinterizzata adatta a più condizioni. Offre prestazione costante e bassa usura. Mescola top seller.

Sintered metal brake pad for large range of conditions. It provides a stable brake performance and low wear rate. Top seller compound.

SM1

Mescola base semi-metallica. Prestazione morbida, potente, e priva di attrito. Ricambio per applicazioni originali. No uso racing.

Entry level semi-metallic compound. Smooth, powerful, quiet and non-grabbing performance. Do not use for racing.

ATV

CM44

Pastiglie freno sinterizzate per molteplici condizioni di utilizzo (fango o sabbia, sole o pioggia). Offre una frenata costante e una ridotta usura sia in pista che per l'utilizzo nel fuoristrada.

Sintered metal brake pad for large range of conditions (mud or sand, sun or rain). It provides a stable brake performance and low wear rate on the race track as well as off-road.

P30

Mescola base semi-metallica. Prestazione morbida, potente, e priva di attrito. Ricambio per applicazioni originali. No uso racing.

Entry level semi-metallic compound. Smooth, powerful, quiet and non-grabbing performance. Do not use for racing.

MASTER CYLINDERS & LEVERS / Pompe e Leve

ONROAD & SUPERMOTARD

CAM-B1

La nuova pompa con leva snodata sviluppata con tecnologia CAM CONTROL. Modulabilità adatta all'utilizzo racing: ottimo grip e controllo. Offerta con 3 pistoni differenti da 19, 17 e 15.

The new master cylinder with foding extendable lever developed with the CAM CONTROL technology. It proves a modularity designed for racing: strong grip and high control. It comes with 3 different pistons from 19, 17 and 15.

LE

La gamma di leve regolabili e snodate per ricambio originale.

The range of machine made extendable levers to fit original master cylinders.

RS-B1

La pompa freno radiale fusa da Ø13, Ø16 e Ø19 con leva grigia snodata o con leva nera pluriregolabile e snodata.

Braking's cast brake master cylinder available in 13, 16 & 19mm piston diameters (16 for single disk; 19 for dual disk) with black folding & extendable lever (black version).

RS-C1

La pompa frizione radiale fusa da Ø13 e Ø16 con leva nera pluriregolabile e snodata oppure nella versione leva grigia fissa.

Braking's cast clutch master cylinder available in 13 & 16mm piston diameters with black folding & extendable lever or silver folding lever.

BRACKETS Supporti

OFFROAD

POW

Supporti in lega di alluminio per dischi oversize (KIT OKI).

Aluminum alloy machined brackets for oversize disks (OKI KIT). Higher braking power.

BIKES / MOTO
CATALOGUE 2015

STRADA/ONROAD P. 10-67

Agrati G.	p. 10	Gilera	p. 28	Moto Guzzi	p. 48
Aprilia	p. 10	Hero	p. 30	Mv Agusta	p. 50
Benelli	p. 12	Highland	p. 30	Mz	p. 52
Beta	p. 12	Honda	p. 30	Peugeot	p. 52
Bimota	p. 12	Husqvarna	p. 38	Rieju	p. 52
Bmw	p. 14	Hyosung	p. 40	Sachs	p. 52
Buell	p. 18	Kawasaki	p. 40	Scorpa	p. 54
Bultaco	p. 20	Ktm	p. 46	Suzuki	p. 54
Cagiva	p. 20	Kymco	p. 46	Sym	p. 58
Ccm	p. 22	Laverda	p. 46	Triumph	p. 58
Derbi	p. 22	Malaguti	p. 48	Voxan	p. 62
Ducati	p. 22	Mondial	p. 48	Yamaha	p. 62
Fantic M.	p. 28	Montesa	p. 48		
Gas Gas	p. 28	Morini	p. 48		

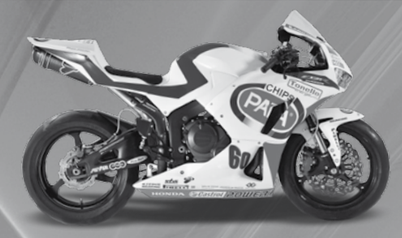

FUORISTRADA/OFFROAD P. 68-99

Agrati G.	p. 68	Honda	p. 74	Montesa	p. 92
Aprilia	p. 68	Honda-Hm	p. 76	Rieju	p. 92
Beta	p. 68	Hrd	p. 78	Scorpa	p. 92
Bmw	p. 70	Husaberg	p. 78	Sherco	p. 94
Cagiva	p. 70	Husqvarna	p. 80	Suzuki	p. 94
Derbi	p. 70	Kawasaki	p. 84	Tm	p. 94
Fantic. M.	p. 70	Kramit	p. 86	Vor	p. 96
Gas Gas	p. 72	Ktm	p. 86	Yamaha	p. 96
Gilera	p. 74	Kymco	p. 92		
Highland	p. 74	Mbk	p. 92		

SCOOTER P. 100-133

Aeon	p. 100	Gilera	p. 106	Motron	p. 118
Agrati G.	p. 100	Honda	p. 108	Peugeot	p. 118
Aprilia	p. 100	Husqvarna	p. 110	Pgo	p. 120
Benelli	p. 102	Italjet	p. 110	Piaggio	p. 120
Beta	p. 102	Kawasaki	p. 110	Suzuki	p. 126
Bmw	p. 102	Ktm	p. 110	Sym	p. 128
Cagiva	p. 102	Kymco	p. 110	Tgb	p. 130
Daelim	p. 104	Lml	p. 114	Villa	p. 130
Derbi	p. 104	Malaguti	p. 114	Yamaha	p. 130
Fantic M.	p. 106	Mbk	p. 116		

SUPERMOTARD P. 134-139

Aprilia	p. 134	Honda-Hm	p. 134	Rieju	p. 138
Beta	p. 134	Husaberg	p. 136	Sherco	p. 138
Derbi	p. 134	Husqvarna	p. 136	Suzuki	p. 138
Ducati	p. 134	Kramit	p. 136	Tm	p. 138
Highland	p. 134	Ktm	p. 136	Vor	p. 138
Honda	p. 134	Mbk	p. 138	Yamaha	p. 138

CRUISER P. 140-147

Harley D.	p. 140	Kymco	p. 144	Triumph	p. 146
Honda	p. 144	Moto Guzzi	p. 144	Yamaha	p. 146
Kawasaki	p. 144	Suzuki	p. 144		

QUAD/ATV P. 148-157

Adly	p. 148	Factory	p. 148	Pgo	p. 150
Aeon	p. 148	Gas Gas	p. 148	Polaris	p. 150
Arctic Cat	p. 148	Hercules	p. 148	Sachs	p. 154
Atk	p. 148	Honda	p. 148	Suzuki	p. 154
Bombardier	p. 148	Hyosung	p. 150	Sym	p. 154
Can-Am	p. 148	Kawasaki	p. 150	Tgb	p. 154
Cpi	p. 148	Kymco	p. 150	Yamaha	p. 154

* articolo in esaurimento / to be discontinued

STRADA / ONROAD

			DISCHI / DISKS									
			ANTERIORE / FRONT								POSTERIORE / REAR	
MODELLO / MODEL	CC	ANNO / YEAR	BATFLY STRADA	SK2	BATFLY ENDURO	R-STX	W-FLO	R-FLO	W-FIX	R-FIX	W-FIX	R-FIX
AGRATI G.												
TIGER XLE	50	1986-1988										
STRADA GTA	125	1983-1985										
TIGER XLE	125	1986-1988										
TIGER XR XRD	125	1985-1987										
APRILIA												
AF1	50	1986-1989										
AF1 FUTURA - AE	50	1990										
AF1 REPLICA	50	1989-1990										
ET TUAREG	50	1986-1990										
EUROPA	50	1990-1995										
MX	50	2003										
RED ROSE	50	1988-1989										
RED ROSE	50	1990-1991										
RED ROSE CLASSIC	50	1992-2002										
RS	50	2006-2010										
RS Extrema	50	1993-1995										
RS Extrema	50	1996-1998										
RS REPLICA	50	1999-2006										
RS4 (AJP Rear Caliper)	50	2011-2014							WF7109		WF7527	
RS4 (J.Juan Rear Caliper)	50	2011-2014							WF7109		WF7527	
TUONO	50	2003-2007										RF7526
AF1	125	1985-1986										
AF1	125	1987-1989										
AF1 FUTURA	125	1990-1992		WK001R		STX01						
AF1 REPLICA	125	1988-1989										
AF1 SINTESI	125	1988-1990										
CLASSIC	125	1996										
ETX	125	1984-1988										
ETX	125	1989										
EUROPA	125	1990-1992										
GP	125	1995-2000										
GP REPLICA	125	1993										
MX	125	2004-2007		WK001L		STX01					AP13RID	AP13RI
PEGASO	125	1990-1991									AP13RID	AP13RI
RED ROSE	125	1990-1994										
RED ROSE	125	1995-2002										
RS	125	1998-2005		WK001R		STX01						RF7526
RS	125	2006-2011		WK001R		STX01						RF7526
RS Extrema	125	1992-1997		WK001R		STX01					AP13RID	AP13RI
RS R PISTA	125	2004										
RS REPLICA	125	1992-1997		WK001R		STX01					AP13RID	AP13RI
RS4 (AJP Rear Caliper)	125	2011-2013							WF7109		WF7527	
RS4 (J.Juan Rear Caliper)	125	2011-2014							WF7109		WF7527	
SPORT PRO	125	1992-1994										
TUONO	125	2003-2007		WK001R		STX01						RF7526
GP REPLICA	250	1991-1994										
RS PISTA	250	2004										
RS REPLICA	250	1995-1997		WK039L / WK039R		STX39					AP08RID	AP08RI
RS REPLICA	250	1998-2003		WK039L / WK039R		STX39					AP08RID	AP08RI
RSV - GP	250	1995-1996										
RSV - GP	250	1997-2006										
ETX	350	1986-1989										
ETX	600	1986-1987										
PEGASO	600	1989-1990									AP13RID	AP13RI
MOTO 6.5	650	1995-2002										
PEGASO	650	1991-1996						AP13FL			AP13RID	AP13RI
PEGASO	650	1997-2000						AP13FL			AP13RID	AP13RI
PEGASO FACTORY	650	2007		WK001L		STX01					BW05RID	BW05RI
PEGASO FACTORY	650	2008-2009		WK001L		STX01					BW05RID	BW05RI
PEGASO I.E.	650	2001-2004						AP13FL			BW05RID	BW05RI
PEGASO STRADA	650	2005-2009		WK001L		STX01						
PEGASO TRAIL	650	2005-2008						AP13FL			BW05RID	BW05RI
SHIVER GT	750	2009		WK001L / WK001R		STX01						
SL SHIVER	750	2007-2014		WK001L / WK001R		STX01						
MANA	850	2007-2011		WK001L / WK001R		STX01						RF7543

STRADA / ONROAD

PASTIGLIE / PADS						LEVE / LEVERS	KIT MAGGIORAZIONE OVERSIZE KIT			
ANTERIORE FRONT				POSTERIORE REAR		ANTERIORE FRONT	ANTERIORE FRONT			
P1R	CM66	CM55	SM1	CM56	SM1	LE*	OKI	MODELLO / MODEL	CC	ANNO / YEAR
								AGRATI G.		
			612SM1					TIGER XLE	50	1986-1988
			648SM1					STRADA GTA	125	1983-1985
			684SM1		648SM1			TIGER XLE	125	1986-1988
			612SM1					TIGER XR XRD	125	1985-1987
								APRILIA		
			671SM1		648SM1			AF1	50	1986-1989
			694SM1		648SM1			AF1 FUTURA - AE	50	1990
			694SM1		648SM1			AF1 REPLICA	50	1989-1990
			612SM1	612CM56	612SM1			ET TUAREG	50	1986-1990
			694SM1		648SM1			EUROPA	50	1990-1995
			770SM1		648SM1			MX	50	2003
			671SM1					RED ROSE	50	1988-1989
			694SM1					RED ROSE	50	1990-1991
			694SM1					RED ROSE CLASSIC	50	1992-2002
			828SM1		621SM1			RS	50	2006-2010
			612SM1	612CM56	612SM1			RS Extrema	50	1993-1995
			612SM1		648SM1			RS Extrema	50	1996-1998
			770SM1		648SM1			RS REPLICA	50	1999-2006
		964CM55						RS4 (AJP Rear Caliper)	50	2011-2014
		964CM55			702SM1			RS4 (J.Juan Rear Caliper)	50	2011-2014
			770SM1		648SM1			TUONO	50	2003-2007
			648SM1		648SM1			AF1	125	1985-1986
				612CM56	612SM1			AF1	125	1987-1989
			726SM1	612CM56	612SM1			AF1 FUTURA	125	1990-1992
			726SM1	612CM56	612SM1			AF1 REPLICA	125	1988-1989
			726SM1	612CM56	612SM1			AF1 SINTESI	125	1988-1990
			684SM1	612CM56	612SM1			CLASSIC	125	1996
			612SM1	612CM56	612SM1			ETX	125	1984-1988
		746CM55	746SM1		743SM1			ETX	125	1989
			726SM1	612CM56	612SM1			EUROPA	125	1990-1992
P1R776	776CM66	776CM55			621SM1			GP	125	1995-2000
	688CM66	688CM55	688SM1		621SM1			GP REPLICA	125	1993
		746CM55	746SM1		743SM1			MX	125	2004-2007
			741SM1		743SM1			PEGASO	125	1990-1991
			684SM1	612CM56	612SM1			RED ROSE	125	1990-1994
			684SM1					RED ROSE	125	1995-2002
			726SM1	612CM56	612SM1			RS	125	1998-2005
		933CM55	933SM1		840SM1			RS	125	2006-2011
			726SM1	612CM56	612SM1			RS Extrema	125	1992-1997
			726SM1	612CM56	612SM1			RS R PISTA	125	2004
			726SM1	612CM56	612SM1			RS REPLICA	125	1992-1997
		964CM55						RS4 (AJP Rear Caliper)	125	2011-2013
		964CM55			702SM1			RS4 (J.Juan Rear Caliper)	125	2011-2014
			726SM1	612CM56	612SM1			SPORT PRO	125	1992-1994
			726SM1	612CM56	612SM1			TUONO	125	2003-2007
	688CM66	688CM55	688SM1	612CM56	612SM1			GP REPLICA	250	1991-1994
	784CM66	784CM55	784SM1	612CM56	612SM1			RS PISTA	250	2004
	688CM66	688CM55	688SM1		779SM1			RS REPLICA	250	1995-1997
	784CM66	784CM55	784SM1		779SM1			RS REPLICA	250	1998-2003
	688CM66	688CM55	688SM1		621SM1			RSV - GP	250	1995-1996
P1R776	776CM66	776CM55			621SM1			RSV - GP	250	1997-2006
			684SM1					ETX	350	1986-1989
			684SM1	612CM56	612SM1			ETX	600	1986-1987
			684SM1		743SM1			PEGASO	600	1989-1990
		780CM55			669SM1			MOTO 6.5	650	1995-2002
					743SM1			PEGASO	650	1991-1996
		780CM55			743SM1			PEGASO	650	1997-2000
		931CM55		773CM56	773SM1			PEGASO FACTORY	650	2007
								PEGASO FACTORY	650	2008-2009
		780CM55			743SM1			PEGASO I.E.	650	2001-2004
	784CM66	784CM55		773CM56	773SM1			PEGASO STRADA	650	2005-2009
		780CM55		773CM56	773SM1			PEGASO TRAIL	650	2005-2008
		933CM55		773CM56	773SM1			SHIVER GT	750	2009
		933CM55		773CM56	773SM1			SL SHIVER	750	2007-2014
		933CM55			684SM1			MANA	850	2007-2011

* articolo in esaurimento / to be discontinued

STRADA / ONROAD

			DISCHI / DISKS									
			ANTERIORE / FRONT								POSTERIORE / REAR	
MODELLO / MODEL	CC	ANNO / YEAR	BATFLY STRADA	SK2	BATFLY ENDURO	R-STX	W-FLO	R-FLO	W-FIX	R-FIX	W-FIX	R-FIX
MANA GT	850	2009-2013		WK001L / WK001R		STX01						RF7543
ETV Capo Nord	1000	2001-2007					AP19FLD	AP19FL			AP20RID	RF7527
ETV CAPO NORD ABS	1000	2001-2007					AP19FLD	AP19FL				
RST Futura	1000	2001-2004										
RSV	1000	1998-2000		WK001L / WK001R		STX01					AP08RID	AP08RI
RSV	1000	2001-2003		WK073L / WK073R		STX73					AP08RID	AP08RI
RSV FACTORY	1000	2003-2007		WK073L / WK073R		STX73					AP08RID	AP08RI
RSV R	1000	2000		WK001L / WK001R		STX01					AP08RID	AP08RI
RSV R	1000	2001-2003		WK073L / WK073R		STX73					AP08RID	AP08RI
RSV R	1000	2004-2008		WK073L / WK073R		STX73					AP08RID	AP08RI
RSV SP	1000	1999-2000		WK001L / WK001R		STX01					AP08RID	AP08RI
RSV4 FACTORY	1000	2009	BY773L / BY773R	WK073L / WK073R		STX73					WF7512	RF7528
RSV4 FACTORY	1000	2010-2011	BY773L / BY773R	WK073L / WK073R		STX73					WF7512	RF7528
RSV4 FACTORY APRC	1000	2011	BY773L / BY773R	WK073L / WK073R		STX73					WF7512	RF7528
RSV4 FACTORY APRC	1000	2012	BY773L / BY773R	WK073L / WK073R		STX73					WF7512	RF7528
RSV4 R	1000	2009	BY773L / BY773R	WK073L / WK073R		STX73					WF7512	RF7528
RSV4 R	1000	2010	BY773L / BY773R	WK073L / WK073R		STX73					WF7512	RF7528
RSV4 R	1000	2011-2012	BY773L / BY773R	WK073L / WK073R		STX73					WF7512	RF7528
SL 1000 FALCO	1000	2000-2004		WK001L / WK001R		STX01					AP08RID	AP08RI
TUONO	1000	2002-2005		WK073L / WK073R		STX73					AP08RID	AP08RI
TUONO FIGHTER	1000	2002-2005		WK001L / WK001R		STX01					AP08RID	AP08RI
TUONO R (2 pads per caliper)	1000	2003-2009		WK001L / WK001R		STX01					AP08RID	AP08RI
TUONO R (4 pads per caliper)	1000	2003-2005		WK073L / WK073R		STX73					AP08RID	AP08RI
TUONO V4 R	1000	2011		WK001L / WK001R		STX01					WF7512	RF7528
TUONO V4 R	1000	2012-2013		WK001L / WK001R		STX01					WF7512	RF7528
TUONO V4 R APRC	1000	2011		WK001L / WK001R		STX01					WF7512	RF7528
TUONO V4 R APRC	1000	2012-2013		WK001L / WK001R		STX01					WF7512	RF7528
TUONO V4 R APRC ABS	1000	2014		WK001L / WK001R		STX01					WF7512	RF7528
CAPONORD	1200	2013-2014		WK001L / WK001R		STX01					WF7521	RF7548
BENELLI												
2C SPORT	125	1982-1990										
2C TURISMO	125	1982-1989										
BX	125	1989-1994										
BXK	125	1988-1994										
JARNO	125	1989-1994										
354 SPORT	350	1983-1986										
504 SPORT	500	1978-1982										
654 SPORT	650	1978-1986										
SEI	750	1975										
CENTURY RACER	899	2011		WK001L / WK001R		STX01					BW05RID	BW05RI
TRE K	899	2011		WK001L / WK001R		STX01					BW05RID	BW05RI
SEI	900	1981-1983										
SEI	900	1984										
TORNADO TRE	900	2001-2002		WK001L / WK001R		STX01						
TORNADO TRE	900	2003-2006		WK073L / WK073R		STX73						
TORNADO TRE RS	900	2004-2006		WK073L / WK073R		STX73						
CAFE RACER	1130	2005-2007		WK073L / WK073R		STX73					BW05RID	BW05RI
CAFE RACER	1130	2011		WK001L / WK001R		STX01					BW05RID	BW05RI
CENTURY RACER	1130	2011		WK001L / WK001R		STX01					BW05RID	BW05RI
TITANIUM	1130	2005-2007		WK073L / WK073R		STX73					BW05RID	BW05RI
TNT	1130	2004		WK001L / WK001R		STX01					BW05RID	BW05RI
TNT	1130	2005-2006		WK001L / WK001R		STX01					BW05RID	BW05RI
TNT R160	1130	2011		WK001L / WK001R		STX01					BW05RID	BW05RI
TNT RS	1130	2005-2007		WK073L / WK073R		STX73					BW05RID	BW05RI
TORNADO	1130	2006		WK073L / WK073R		STX73						
TRE K	1130	2007										
TRE K	1130	2011		WK001L / WK001R		STX01					BW05RID	BW05RI
BETA												
ALP LONG RANGE	50	1991-1998										
KR ADVENTURE	50	1987-1989										
RK-6	50	1994-1997										
BIMOTA												
YB7	400	1989		WK001L / WK001R		STX01						
V-DUE	500	1997-2000		WK001L / WK001R		STX01						
BELLARIA	600	1991-1993										
YB9	600	1997-2000										

STRADA / ONROAD

PASTIGLIE / PADS						LEVE / LEVERS	KIT MAGGIORAZIONE OVERSIZE KIT			
ANTERIORE FRONT				POSTERIORE REAR		ANTERIORE FRONT	ANTERIORE FRONT			
P1R	CM66	CM55	SM1	CM56	SM1	LE*	OKI	MODELLO / MODEL	CC	ANNO / YEAR
		933CM55			684SM1			MANA GT	850	2009-2013
		780CM55		828CM56	828SM1			ETV Capo Nord	1000	2001-2007
		780CM55		828CM56	828SM1			ETV CAPO NORD ABS	1000	2001-2007
	784CM66	784CM55			746SM1			RST Futura	1000	2001-2004
	784CM66	784CM55		828CM56	828SM1			RSV	1000	1998-2000
	870CM66	870CM55		828CM56	828SM1			RSV	1000	2001-2003
	870CM66	870CM55		828CM56	828SM1			RSV FACTORY	1000	2003-2007
	784CM66	784CM55		828CM56	828SM1			RSV R	1000	2000
	870CM66	870CM55		828CM56	828SM1			RSV R	1000	2001-2003
	870CM66	870CM55		828CM56	828SM1	LE1001* / LE1008* / LE2001* / LE2008*		RSV R	1000	2004-2008
	784CM66	784CM55		828CM56	828SM1			RSV SP	1000	1999-2000
P1R930	930CM66	930CM55		828CM56	828SM1	LE1035 / LE2035 / LE2045		RSV4 FACTORY	1000	2009
P1R930	930CM66	930CM55		828CM56	828SM1			RSV4 FACTORY	1000	2010-2011
P1R930	930CM66	930CM55		828CM56	828SM1	LE1035 / LE2035 / LE2045		RSV4 FACTORY APRC	1000	2011
P1R930	930CM66	930CM55		828CM56	828SM1			RSV4 FACTORY APRC	1000	2012
P1R930	930CM66	930CM55		828CM56	828SM1			RSV4 R	1000	2009
P1R930	930CM66	930CM55		828CM56	828SM1	LE1035 / LE2035 / LE2045		RSV4 R	1000	2010
P1R930	930CM66	930CM55		828CM56	828SM1			RSV4 R	1000	2011-2012
	784CM66	784CM55		828CM56	828SM1			SL 1000 FALCO	1000	2000-2004
	870CM66	870CM55		828CM56	828SM1			TUONO	1000	2002-2005
	784CM66	784CM55		828CM56	828SM1			TUONO FIGHTER	1000	2002-2005
	784CM66	784CM55		828CM56	828SM1			TUONO R (2 pads per caliper)	1000	2003-2009
	870CM66	870CM55		828CM56	828SM1			TUONO R (4 pads per caliper)	1000	2003-2005
	784CM66	784CM55		828CM56	828SM1	LE1035* / LE1037* / LE2035* / LE2037*		TUONO V4 R	1000	2011
	784CM66	784CM55		828CM56	828SM1			TUONO V4 R	1000	2012-2013
	784CM66	784CM55		828CM56	828SM1	LE1035* / LE1037* / LE2035* / LE2037*		TUONO V4 R APRC	1000	2011
	784CM66	784CM55		828CM56	828SM1			TUONO V4 R APRC	1000	2012-2013
		960CM55		828CM56	828SM1			TUONO V4 R APRC ABS	1000	2014
		960CM55		773CM56	773SM1			CAPONORD	1200	2013-2014
								BENELLI		
			612SM1					2C SPORT	125	1982-1990
			612SM1					2C TURISMO	125	1982-1989
			726SM1	612CM56	612SM1			BX	125	1989-1994
			612SM1		648SM1			BXK	125	1988-1994
			726SM1	612CM56	612SM1			JARNO	125	1989-1994
			612SM1	612CM56	612SM1			354 SPORT	350	1983-1986
			612SM1	613CM56	613SM1			504 SPORT	500	1978-1982
			612SM1	612CM56	612SM1			654 SPORT	650	1978-1986
		613CM55						SEI	750	1975
								CENTURY RACER	899	2011
								TRE K	899	2011
			644SM1					SEI	900	1981-1983
		613CM55		613CM56	613SM1			SEI	900	1984
	784CM66	784CM55		612CM56	612SM1			TORNADO TRE	900	2001-2002
	870CM66	870CM55		828CM56	828SM1			TORNADO TRE	900	2003-2006
	870CM66	870CM55		828CM56	828SM1			TORNADO TRE RS	900	2004-2006
	870CM66	870CM55		828CM56	828SM1			CAFE RACER	1130	2005-2007
								CAFE RACER	1130	2011
								CENTURY RACER	1130	2011
	870CM66	870CM55		828CM56	828SM1			TITANIUM	1130	2005-2007
	784CM66	784CM55		612CM56	612SM1			TNT	1130	2004
	784CM66	784CM55		828CM56	828SM1			TNT	1130	2005-2006
								TNT R160	1130	2011
	870CM66	870CM55		828CM56	828SM1			TNT RS	1130	2005-2007
	870CM66	870CM55		828CM56	828SM1			TORNADO	1130	2006
	784CM66	784CM55						TRE K	1130	2007
								TRE K	1130	2011
								BETA		
			671SM1					ALP LONG RANGE	50	1991-1998
			648SM1		648SM1			KR ADVENTURE	50	1987-1989
			741SM1		648SM1			RK-6	50	1994-1997
								BIMOTA		
	688CM66	688CM55		612CM56	612SM1			YB7	400	1989
	688CM66	688CM55		612CM56	612SM1			V-DUE	500	1997-2000
	688CM66	688CM55		612CM56	612SM1			BELLARIA	600	1991-1993
	688CM66	688CM55		612CM56	612SM1			YB9	600	1997-2000

* articolo in esaurimento / to be discontinued

STRADA / ONROAD

			DISCHI / DISKS									
			ANTERIORE / FRONT								POSTERIORE / REAR	
MODELLO / MODEL	CC	ANNO / YEAR	BATFLY STRADA	SK2	BATFLY ENDURO	R-STX	W-FLO	R-FLO	W-FIX	R-FIX	W-FIX	R-FIX
BB1 SUPERMONO	650	1996-2000		WK001R		STX01						
DB1	750	1986-1987										
DB1 RS	750	1987-1989										
SB3	750	1980-1986										
SB7	750	1995-2000										
YB4 EI	750	1987-1991										
YB6	750	1987-1990										
TESI 1D 851	851	1990-1991		WK001L / WK001R		STX01						
DB2 SR	904	1993-2000		WK001L / WK001R		STX01						
DB3 MANTRA	904	1995-2000		WK001L / WK001R		STX01						
DB4	904	1998-1999		WK001L / WK001R		STX01						
DB4 I.E.	904	2000-2001										
TESI 1D 906	904	1993-2000										
BB3	1000	2014										
DB5 MILLE	1000	2005-2006										
DB6 DELIRIO	1000	2006										
DIECI	1000	1991-1995										
DIECI BIPOSTO	1000	1992-1995		WK001L / WK001R		STX01						
SB8K GOBERT	1000	2006		WK001L / WK001R		STX01						
SB8K SANTAMONICA	1000	2006		WK073L / WK073R		STX73						
SB8R	1000	1997-2000		WK001L / WK001R		STX01						
TESI 2D	1000	2005-2006										
YB11	1000	1996-2000										
YB6	1000	1988-1989										
YB8 FURANO	1000	1992-2000										
HB2	1100	1982-1983										
SB4	1100	1983-1985										
SB4S SB	1100	1983-1985										
SB5S SP	1100	1984-1985										
SB6	1100	1996-2000		WK001L / WK001R		STX01						
SB6R	1100	1998-2000		WK001L / WK001R		STX01						
TUATARA	1100	1990										
BMW												
R 45	450	1978-1986								BW01FI		
F 650	650	1994-2001						RL7006			BW05RID	BW05RI
F 650 CS	650	2002-2007					WL101R	RL7006			BW05RID	BW05RI
F 650 GS	650	2001-2007						RL7006			BW05RID	BW05RI
F 650 GS ABS	650	2001-2007						RL7006			BW05RID	BW05RI
F 650 GS DAKAR	650	1999-2007					WL101L	RL7006			BW05RID	BW05RI
F 650 ST	650	1997-2001						RL7006			BW05RID	BW05RI
G 650 GS	650	2009-2014					WL101L	RL7006			BW05RID	BW05RI
G 650 GS SERTAO	650	2012-2014					WL101L	RL7006			BW05RID	BW05RI
G 650 X CHALLENGE	650	2007-2009					WL101L	RL7006				
G 650 X COUNTRY	650	2007-2009					WL101L	RL7006				
G 650 X Moto	650	2007-2009		WK001L		STX01						
R 65	650	1978-1980								BW01FI		
R 65	650	1986-1989										
R 65 GS	650	1987										
R 65 LS	650	1982-1988								BW01FI		
K 75	750	1984-1996								BW02FI		
K 75 C	750	1985-1991								BW02FI		
K 75 RT	750	1990-1996								BW02FI		BW02FI
K 75 S	750	1985-1988								BW02FI		BW02FI
K 75 S	750	1989-1992								BW02FI		
K 75 S	750	1993-1996								BW02FI		BW02FI
F 650 GS	800	2008						RL7006			BW06RID	BW06RI
F 650 GS	800	2009-2011						RL7006			BW06RID	BW06RI
F 650 GS	800	2012						RL7006			BW06RID	BW06RI
F 650 GS ABS	800	2008						RL7006			BW06RID	BW06RI
F 650 GS ABS	800	2009-2011						RL7006			BW06RID	BW06RI
F 700 GS	800	2013-2014			BY102L / BY102R		WL101L / WL101R	RL7006			BW06RID	BW06RI
F 800 GS	800	2009-2011			BY102L / BY102R		WL101L / WL101R	RL7006			BW06RID	BW06RI
F 800 GS	800	2012-2014			BY102L / BY102R		WL101L / WL101R	RL7006			BW06RID	BW06RI
F 800 GS ADVENTURE	800	2013-2014			BY102L / BY102R		WL101L / WL101R	RL7006			BW06RID	BW06RI
F 800 GT	800	2013-2014					WH7004	RH7004			BW06RID	BW06RI
F 800 R	800	2009-2014					WH7004	RH7004			BW06RID	BW06RI

STRADA / ONROAD

PASTIGLIE / PADS						LEVE / LEVERS	KIT MAGGIORAZIONE OVERSIZE KIT			
ANTERIORE FRONT				POSTERIORE REAR		ANTERIORE FRONT	ANTERIORE FRONT			
P1R	CM66	CM55	SM1	CM56	SM1	LE*	OKI	MODELLO / MODEL	CC	ANNO / YEAR
	688CM66	688CM55		612CM56	612SM1			BB1 SUPERMONO	650	1996-2000
		613CM55		612CM56	612SM1			DB1	750	1986-1987
	688CM66	688CM55		612CM56	612SM1			DB1 RS	750	1987-1989
		613CM55		613CM56	613SM1			SB3	750	1980-1986
	688CM66	688CM55		612CM56	612SM1			SB7	750	1995-2000
	688CM66	688CM55		612CM56	612SM1			YB4 EI	750	1987-1991
	688CM66	688CM55		612CM56	612SM1			YB6	750	1987-1990
	688CM66	688CM55		612CM56	612SM1			TESI 1D 851	851	1990-1991
	688CM66	688CM55		612CM56	612SM1			DB2 SR	904	1993-2000
	688CM66	688CM55		612CM56	612SM1			DB3 MANTRA	904	1995-2000
	688CM66	688CM55		612CM56	612SM1			DB4	904	1998-1999
	784CM66	784CM55		612CM56	612SM1			DB4 I.E.	904	2000-2001
	688CM66	688CM55		612CM56	612SM1			TESI 1D 906	904	1993-2000
P1R930	930CM66	930CM55		828CM56	828SM1			BB3	1000	2014
	870CM66	870CM55		828CM56	828SM1			DB5 MILLE	1000	2005-2006
	870CM66	870CM55						DB6 DELIRIO	1000	2006
	688CM66	688CM55		612CM56	612SM1			DIECI	1000	1991-1995
	688CM66	688CM55		612CM56	612SM1			DIECI BIPOSTO	1000	1992-1995
	784CM66	784CM55		612CM56	612SM1			SB8K GOBERT	1000	2006
	870CM66	870CM55						SB8K SANTAMONICA	1000	2006
	784CM66	784CM55		612CM56	612SM1			SB8R	1000	1997-2000
	688CM66	688CM55		612CM56	612SM1			TESI 2D	1000	2005-2006
	688CM66	688CM55		612CM56	612SM1			YB11	1000	1996-2000
	688CM66	688CM55		612CM56	612SM1			YB6	1000	1988-1989
	688CM66	688CM55		612CM56	612SM1			YB8 FURANO	1000	1992-2000
		613CM55		613CM56	613SM1			HB2	1100	1982-1983
		613CM55		613CM56	613SM1			SB4	1100	1983-1985
		613CM55		613CM56	613SM1			SB4S SB	1100	1983-1985
		613CM55		613CM56	613SM1			SB5S SP	1100	1984-1985
	688CM66	688CM55		612CM56	612SM1			SB6	1100	1996-2000
	688CM66	688CM55		612CM56	612SM1			SB6R	1100	1998-2000
	688CM66	688CM55		612CM56	612SM1			TUATARA	1100	1990
								BMW		
								R 45	450	1978-1986
		780CM55		773CM56	773SM1			F 650	650	1994-2001
		780CM55		773CM56	773SM1			F 650 CS	650	2002-2007
		780CM55		773CM56	773SM1			F 650 GS	650	2001-2007
		780CM55		773CM56	773SM1			F 650 GS ABS	650	2001-2007
		780CM55			773SM1			F 650 GS DAKAR	650	1999-2007
		780CM55		773CM56	773SM1			F 650 ST	650	1997-2001
		780CM55		773CM56	773SM1			G 650 GS	650	2009-2014
		780CM55		773CM56	773SM1			G 650 GS SERTAO	650	2012-2014
		780CM55		773CM56	773SM1			G 650 X CHALLENGE	650	2007-2009
		780CM55		773CM56	773SM1			G 650 X COUNTRY	650	2007-2009
	784CM66	784CM55		773CM56	773SM1			G 650 X Moto	650	2007-2009
		613CM55						R 65	650	1978-1980
			644SM1					R 65	650	1986-1989
		613CM55						R 65 GS	650	1987
		613CM55						R 65 LS	650	1982-1988
			644SM1	613CM56	613SM1			K 75	750	1984-1996
		613CM55		613CM56	613SM1			K 75 C	750	1985-1991
				613CM56	613SM1			K 75 RT	750	1990-1996
		613CM55		613CM56	613SM1			K 75 S	750	1985-1988
		613CM55						K 75 S	750	1989-1992
			644SM1	613CM56	613SM1			K 75 S	750	1993-1996
		780CM55		773CM56	773SM1			F 650 GS	800	2008
		780CM55		773CM56	773SM1	LE1015* / LE1020* / LE2015* / LE2020*		F 650 GS	800	2009-2011
		780CM55		773CM56	773SM1			F 650 GS	800	2012
		780CM55		773CM56	773SM1			F 650 GS ABS	800	2008
		780CM55		773CM56	773SM1	LE1015* / LE1020* / LE2015* / LE2020*		F 650 GS ABS	800	2009-2011
		780CM55		773CM56	773SM1			F 700 GS	800	2013-2014
		780CM55		773CM56	773SM1	LE1015* / LE1020* / LE2015* / LE2020*		F 800 GS	800	2009-2011
		780CM55		773CM56	773SM1			F 800 GS	800	2012-2014
		780CM55		773CM56	773SM1			F 800 GS ADVENTURE	800	2013-2014
	784CM66	784CM55		773CM56	773SM1			F 800 GT	800	2013-2014
	784CM66	784CM55		773CM56	773SM1			F 800 R	800	2009-2014

STRADA / ONROAD

* articolo in esaurimento / to be discontinued

STRADA / ONROAD

			DISCHI / DISKS									
			ANTERIORE / FRONT								POSTERIORE / REAR	
MODELLO / MODEL	CC	ANNO / YEAR	BATFLY STRADA	SK2	BATFLY ENDURO	R-STX	W-FLO	R-FLO	W-FIX	R-FIX	W-FIX	R-FIX
F 800 S	800	2006-2010					WH7004	RH7004			BW06RID	BW06RI
F 800 ST	800	2006-2011					WH7004	RH7004		BW06RID	BW06RID	BW06RI
F 800 ST	800	2012					WH7004	RH7004			BW06RID	BW06RI
PARIS DAKAR	800	1981-1987								BW01FI		
R 80	800	1981-1993								BW02FI		
R 80 GS	800	1981-1987										
R 80 GS	800	1988-1990								BW01FI		
R 80 GS	800	1991										
R 80 GS PARIS DAKAR	800	1988-1994								BW02FI		
R 80 R	800	1991										
R 80 R ROADSTER	800	1992-1993								BW02FI		
R 80 RT	800	1983-1984										
R 80 RT	800	1985-1989								BW02FI		
R 80 RT	800	1990-1994								BW02FI		
R 850 C	850	1998-2001					WH7003	RH7003			BW03RID	BW03RI
R 850 GS	850	1998-2007					WH7003	RH7003			BW03RID	BW03RI
R 850 R	850	1994-2003						RL7005			BW03RID	BW03RI
R 850 R	850	2004-2007					WH7004	RH7004			BW03RID	BW03RI
R 850 RT	850	1995-2001						RL7005			BW03RID	BW03RI
R 850 RT Integral ABS	850	2001-2004					WH7004	RH7004			BW03RID	BW03RI
R 90 TT	900	1981-1985										
HP4	1000	2013-2014		WK117L / WK117R							WF7508	RF7519
K 100	1000	1983-1989								BW02FI		BW02FI
K 100 LT	1000	1992										
K 100 LT ABS	1000	1990-1991								BW02FI		BW02FI
K 100 LT LIMITED	1000	1991-1992								BW02FI		BW02FI
K 100 RS	1000	1984-1989								BW02FI		BW02FI
K 100 RS 16V	1000	1989-1993						RL7005				BW02FI
K 100 RT	1000	1984-1989								BW02FI		BW02FI
K1	1000	1989-1993						RL7005				BW02FI
R 100	1000	1981-1989								BW01FI		BW01FI
R 100 CS	1000	1981-1989								BW01FI		
R 100 GS	1000	1987-1994								BW02FI		
R 100 R	1000	1992-1996								BW02FI		BW02FI
R 100 R MYSTIC	1000	1991-1995										
R 100 R ROADSTER	1000	1992-1995								BW02FI		
R 100 RS	1000	1976-1980								BW01FI		BW01FI
R 100 RT	1000	1976										
R 100 RT	1000	1977										
R 100 RT	1000	1978-1983										
R 100 RT	1000	1984-1990										
R 100 RT	1000	1991-1994								BW02FI		
R 100 S	1000	1976-1980										
R 100 T	1000	1976-1980										
S 1000 R	1000	2014	BY709L / BY709R	WK109L / WK109R				RH7005			WF7508	RF7519
S 1000 RR	1000	2010-2012	BY709L / BY709R	WK109L / WK109R				RH7005			WF7508	RF7519
S 1000 RR	1000	2013-2014	BY709L / BY709R	WK109L / WK109R				RH7005			WF7508	RF7519
K 1100 LT	1100	1992-2000						RL7005				BW02FI
K 1100 RS	1100	1993-1996						RL7005				BW02FI
R 1100 GS	1100	1994-2001					WH7003	RH7003			BW03RID	BW03RI
R 1100 R	1100	1995-2001						RL7005			BW03RID	BW03RI
R 1100 RS	1100	1993										
R 1100 RS	1100	1994-2001						RL7005				BW02FI
R 1100 RT	1100	1994-2001						RL7005			BW03RID	BW03RI
R 1100 RT ABS	1100	1994-2001						RL7005			BW03RID	BW03RI
R 1100 S	1100	1998-2000					WH7003	RH7003			BW03RID	BW03RI
R 1100 S	1100	2001-2006					WH7004	RH7004			BW03RID	BW03RI
R 1100 S BOXER CUP REPLIKA	1100	2003-2006					WH7004	RH7004			BW03RID	BW03RI
R 1150 GS	1150	1999-2001					WH7003	RH7003			BW03RID	BW03RI
R 1150 GS (Brembo caliper)	1150	2002-2004					WH7003	RH7003			BW03RID	BW03RI
R 1150 GS ADVENTURE	1150	2002-2005					WH7003	RH7003			BW03RID	BW03RI
R 1150 R	1150	2001-2006					WH7004	RH7004			BW03RID	BW03RI
R 1150 R ROCKSTER	1150	2003-2006					WH7004	RH7004			BW03RID	BW03RI
R 1150 RS	1150	2001-2005					WH7004	RH7004			BW03RID	BW03RI
R 1150 RT	1150	2001-2005					WH7004	RH7004			BW03RID	BW03RI
R 1150 RT ABS	1150	2001-2005					WH7004	RH7004			BW03RID	BW03RI

STRADA / ONROAD

PASTIGLIE / PADS						LEVE / LEVERS	KIT MAGGIORAZIONE OVERSIZE KIT			
ANTERIORE FRONT				POSTERIORE REAR		ANTERIORE FRONT	ANTERIORE FRONT			
P1R	CM66	CM55	SM1	CM56	SM1	LE*	OKI	MODELLO / MODEL	CC	ANNO / YEAR
	784CM66	784CM55		773CM56	773SM1	LE1015* / LE1020* / LE2015* / LE2020*		F 800 S	800	2006-2010
	784CM66	784CM55		773CM56	773SM1	LE1015* / LE1020* / LE2015* / LE2020*		F 800 ST	800	2006-2011
	784CM66	784CM55		773CM56	773SM1			F 800 ST	800	2012
		613CM55						PARIS DAKAR	800	1981-1987
		613CM55						R 80	800	1981-1993
		613CM55						R 80 GS	800	1981-1987
								R 80 GS	800	1988-1990
		613CM55						R 80 GS	800	1991
			644SM1					R 80 GS PARIS DAKAR	800	1988-1994
			739SM1	613CM56	613SM1			R 80 R	800	1991
			739SM1					R 80 R ROADSTER	800	1992-1993
		613CM55						R 80 RT	800	1983-1984
			644SM1					R 80 RT	800	1985-1989
		613CM55						R 80 RT	800	1990-1994
		806CM55	806SM1	794CM56	794SM1			R 850 C	850	1998-2001
		806CM55	806SM1	794CM56	794SM1			R 850 GS	850	1998-2007
		806CM55	806SM1	794CM56	794SM1			R 850 R	850	1994-2003
		879CM55		794CM56	794SM1			R 850 R	850	2004-2007
		806CM55	806SM1	794CM56	794SM1			R 850 RT	850	1995-2001
		892CM55	892SM1	794CM56	794SM1			R 850 RT Integral ABS	850	2001-2004
		613CM55		613CM56	613SM1			R 90 TT	900	1981-1985
P1R930	930CM66	930CM55		773CM56	773SM1			HP4	1000	2013-2014
		613CM55		613CM56	613SM1			K 100	1000	1983-1989
			739SM1					K 100 LT	1000	1992
		613CM55		613CM56	613SM1			K 100 LT ABS	1000	1990-1991
		613CM55		613CM56	613SM1			K 100 LT LIMITED	1000	1991-1992
		613CM55		613CM56	613SM1			K 100 RS	1000	1984-1989
			739SM1	613CM56	613SM1			K 100 RS 16V	1000	1989-1993
		613CM55		613CM56	613SM1			K 100 RT	1000	1984-1989
			739SM1	613CM56	613SM1			K1	1000	1989-1993
		613CM55		613CM56	613SM1			R 100	1000	1981-1989
		613CM55		613CM56	613SM1			R 100 CS	1000	1981-1989
			644SM1					R 100 GS	1000	1987-1994
			739SM1	613CM56	613SM1			R 100 R	1000	1992-1996
			644SM1					R 100 R MYSTIC	1000	1991-1995
			739SM1					R 100 R ROADSTER	1000	1992-1995
		613CM55						R 100 RS	1000	1976-1980
				613CM56	613SM1			R 100 RT	1000	1976
				613CM56				R 100 RT	1000	1977
				613CM56	613SM1			R 100 RT	1000	1978-1983
		613CM55		613CM56	613SM1			R 100 RT	1000	1984-1990
			644SM1	613CM56	613SM1			R 100 RT	1000	1991-1994
				613CM56	613SM1			R 100 S	1000	1976-1980
				613CM56	613SM1			R 100 T	1000	1976-1980
P1R947	947CM66	947CM55		773CM56	773SM1			S 1000 R	1000	2014
P1R947	947CM66	947CM55		773CM56	773SM1	LE1029* / LE2029*		S 1000 RR	1000	2010-2012
P1R947	947CM66	947CM55		773CM56	773SM1			S 1000 RR	1000	2013-2014
			739SM1	613CM56	613SM1			K 1100 LT	1100	1992-2000
			739SM1	613CM56	613SM1			K 1100 RS	1100	1993-1996
		806CM55	806SM1	794CM56	794SM1			R 1100 GS	1100	1994-2001
		806CM55	806SM1	794CM56	794SM1			R 1100 R	1100	1995-2001
			739SM1	613CM56	613SM1			R 1100 RS	1100	1993
		806CM55	806SM1	613CM56	613SM1			R 1100 RS	1100	1994-2001
		806CM55	806SM1	794CM56	794SM1			R 1100 RT	1100	1994-2001
		806CM55	806SM1	794CM56	794SM1			R 1100 RT ABS	1100	1994-2001
		806CM55	806SM1	794CM56	794SM1			R 1100 S	1100	1998-2000
		892CM55	892SM1	794CM56	794SM1			R 1100 S	1100	2001-2006
		892CM55	892SM1	794CM56	794SM1			R 1100 S BOXER CUP REPLIKA	1100	2003-2006
		806CM55	806SM1	794CM56	794SM1			R 1150 GS	1150	1999-2001
		892CM55	892SM1	794CM56	794SM1			R 1150 GS (Brembo caliper)	1150	2002-2004
		892CM55	892SM1	794CM56	794SM1			R 1150 GS ADVENTURE	1150	2002-2005
		879CM55		794CM56	794SM1			R 1150 R	1150	2001-2006
		879CM55		794CM56	794SM1			R 1150 R ROCKSTER	1150	2003-2006
		879CM55		794CM56	794SM1			R 1150 RS	1150	2001-2005
		892CM55	892SM1	794CM56	794SM1			R 1150 RT	1150	2001-2005
		892CM55	892SM1	794CM56	794SM1			R 1150 RT ABS	1150	2001-2005

* articolo in esaurimento / to be discontinued

STRADA / ONROAD

			DISCHI / DISKS									
			ANTERIORE / FRONT								POSTERIORE / REAR	
MODELLO / MODEL	CC	ANNO / YEAR	BATFLY STRADA	SK2	BATFLY ENDURO	R-STX	W-FLO	R-FLO	W-FIX	R-FIX	W-FIX	R-FIX
HP2	1200	2006-2009					WH7003	RH7003			BW06RID	BW06RI
HP2 Megamoto	1200	2007-2010					WH7004	RH7004			BW06RID	BW06RI
HP2 SPORT	1200	2008-2011					WH7004	RH7004			BW06RID	BW06RI
K 1200 GT ABS	1200	2002-2007					WH7004	RH7004				
K 1200 LT	1200	1999-2000					WH7003	RH7003				
K 1200 LT ABS	1200	2001-2009					WH7004	RH7004				
K 1200 R	1200	2004					WH7004	RH7004			BW06RID	BW06RI
K 1200 R	1200	2005-2006					WH7004	RH7004			BW06RID	BW06RI
K 1200 R	1200	2007-2008					WH7004	RH7004			BW06RID	BW06RI
K 1200 RS	1200	1997-2000					WH7003	RH7003				
K 1200 RS	1200	2001-2006					WH7004	RH7004				
K 1200 S / ABS	1200	2004					WH7004	RH7004			BW06RID	BW06RI
K 1200 S / ABS	1200	2005-2006					WH7004	RH7004			BW06RID	BW06RI
K 1200 S / ABS	1200	2007					WH7004	RH7004			BW06RID	BW06RI
K 1200 S / ABS	1200	2008-2011										
R 1200 C	1200	1997-2001					WH7003	RH7003				
R 1200 C CLASSIC	1200	2003					WH7003	RH7003				
R 1200 CL	1200	2002-2006					WH7003	RH7003				
R 1200 GS	1200	2004-2007					WH7003	RH7003			BW06RID	BW06RI
R 1200 GS	1200	2008-2011			BY101L / BY101R		WH7003	RH7003			BW06RID	BW06RI
R 1200 GS	1200	2012			BY101L / BY101R		WH7003	RH7003			BW06RID	BW06RI
R 1200 GS	1200	2013-2014			BY101L / BY101R		WH7003	RH7003			WF7525	RF7547
R 1200 GS - ABS	1200	2004-2007					WH7003	RH7003			BW06RID	BW06RI
R 1200 GS - ABS	1200	2008-2011			BY101L / BY101R		WH7003	RH7003			BW06RID	BW06RI
R 1200 GS - ABS	1200	2012			BY101L / BY101R		WH7003	RH7003			BW06RID	BW06RI
R 1200 GS - ABS	1200	2013-2014			BY101L / BY101R		WH7003	RH7003			WF7525	RF7547
R 1200 GS ADVENTURE	1200	2006-2007					WH7003	RH7003			BW06RID	BW06RI
R 1200 GS ADVENTURE	1200	2008			BY101L / BY101R		WH7003	RH7003			BW06RID	BW06RI
R 1200 GS ADVENTURE	1200	2009-2013			BY101L / BY101R		WH7003	RH7003			BW06RID	BW06RI
R 1200 GS ADVENTURE	1200	2014			BY101L / BY101R		WH7003	RH7003			BW06RID	BW06RI
R 1200 R	1200	2006-2012					WH7004	RH7004			BW06RID	BW06RI
R 1200 R	1200	2013					WH7004	RH7004			BW06RID	BW06RI
R 1200 RT	1200	2005-2013					WH7004	RH7004			BW06RID	BW06RI
R 1200 RT	1200	2014										
R 1200 S	1200	2005										
R 1200 S	1200	2006					WH7004	RH7004			BW06RID	BW06RI
R 1200 S	1200	2007-2008					WH7004	RH7004			BW06RID	BW06RI
R 1200 S	1200	2009										
R 1200 ST	1200	2005					WH7004	RH7004			BW06RID	BW06RI
R 1200 ST	1200	2006-2008					WH7004	RH7004			BW06RID	BW06RI
R NINE T	1200	2014					WH7004	RH7004			BW06RID	BW06RI
K 1300 GT	1300	2009-2010					WH7004	RH7004				
K 1300 R - ABS	1300	2008-2011					WH7004	RH7004			BW06RID	BW06RI
K 1300 R - ABS	1300	2012-2014					WH7004	RH7004			BW06RID	BW06RI
K 1300 S	1300	2009-2014					WH7004	RH7004			BW06RID	BW06RI
K 1600 GT	1600	2011-2014					WH7004	RH7004				
K 1600 GTL	1600	2011-2014					WH7004	RH7004				
BUELL												
BLAST	500	2001-2007										
XB9R FIREBOLT	984	2002-2006		BL02FID							BL02RID	RF7529
XB9S LIGHTNING	984	2002-2006		BL02FID							BL02RID	RF7529
XB9SX CityX	984	2005-2009		BL02FID							BL02RID	RF7529
1125 CR	1125	2008-2009		BL02FID							BL02RID	RF7529
1125 R	1125	2008-2009		BL02FID							BL02RID	RF7529
M2 CYCLONE	1200	1998-2002		WK042R							BL01RID	BL01RI
S1 LIGHTNING	1200	1998-2002		WK042R							BL01RID	BL01RI
S3 THUNDERBOLT	1200	1998-2002		WK042R							BL01RID	BL01RI
S3T THUNDERBOLT	1200	1998-2002		WK042R							BL01RID	BL01RI
X1 LIGHTNING	1200	1999-2002		WK042R							BL01RID	BL01RI
XB12R FIREBOLT	1200	2004-2009		BL02FID							BL02RID	RF7529
XB12S LIGHTNING	1200	2003-2008		BL02FID							BL02RID	RF7529
XB12SS / SCG	1200	2009		BL02FID							BL02RID	RF7529
XB12SS LIGHTNING LONG	1200	2005-2006		BL02FID							BL02RID	RF7529
XB12X ULYSSES	1200	2005-2007		BL02FID							BL02RID	RF7529
XBRR	1340	2006		BL02FID							BL02RID	RF7529

STRADA / ONROAD

PASTIGLIE / PADS						LEVE / LEVERS	KIT MAGGIORAZIONE OVERSIZE KIT			
ANTERIORE FRONT				POSTERIORE REAR		ANTERIORE FRONT	ANTERIORE FRONT			
P1R	CM66	CM55	SM1	CM56	SM1	LE*	OKI	MODELLO / MODEL	CC	ANNO / YEAR
		780CM55		794CM56	794SM1			HP2	1200	2006-2009
		892CM55	892SM1	794CM56	794SM1			HP2 Megamoto	1200	2007-2010
P1R930	930CM66	930CM55		794CM56	794SM1			HP2 SPORT	1200	2008-2011
		892CM55	892SM1	613CM56	613SM1			K 1200 GT ABS	1200	2002-2007
		806CM55	806SM1					K 1200 LT	1200	1999-2000
		879CM55						K 1200 LT ABS	1200	2001-2009
		892CM55		794CM56	794SM1			K 1200 R	1200	2004
		892CM55		794CM56	794SM1	LE1013* / LE1019* / LE2013* / LE2019*		K 1200 R	1200	2005-2006
		892CM55		794CM56	794SM1	LE1013* / LE1020* / LE2013* / LE2020*		K 1200 R	1200	2007-2008
		806CM55	806SM1	613CM56	613SM1			K 1200 RS	1200	1997-2000
		892CM55	892SM1	613CM56	613SM1			K 1200 RS	1200	2001-2006
		892CM55	892SM1	794CM56	794SM1			K 1200 S / ABS	1200	2004
		892CM55	892SM1	794CM56	794SM1	LE1013* / LE1019* / LE2013* / LE2019*		K 1200 S / ABS	1200	2005-2006
		892CM55	892SM1	794CM56	794SM1	LE1013* / LE1020* / LE2013* / LE2020*		K 1200 S / ABS	1200	2007
						LE1013* / LE1020* / LE2013* / LE2020*		K 1200 S / ABS	1200	2008-2011
		806CM55	806SM1	794CM56	794SM1			R 1200 C	1200	1997-2001
		806CM55	806SM1	794CM56	794SM1			R 1200 C CLASSIC	1200	2003
		879CM55						R 1200 CL	1200	2002-2006
		892CM55	892SM1	794CM56	794SM1	LE1013* / LE1020* / LE2013* / LE2020*		R 1200 GS	1200	2004-2007
		892CM55	892SM1	794CM56	794SM1	LE1013* / LE1020* / LE2013* / LE2020*		R 1200 GS	1200	2008-2011
		892CM55	892SM1	794CM56	794SM1			R 1200 GS	1200	2012
		960CM55			780SM1			R 1200 GS	1200	2013-2014
		892CM55	892SM1	794CM56	794SM1	LE1013* / LE1020* / LE2013* / LE2020*		R 1200 GS - ABS	1200	2004-2007
		892CM55	892SM1	794CM56	794SM1	LE1013* / LE1020* / LE2013* / LE2020*		R 1200 GS - ABS	1200	2008-2011
		892CM55	892SM1	794CM56	794SM1			R 1200 GS - ABS	1200	2012
		960CM55			780SM1			R 1200 GS - ABS	1200	2013-2014
		892CM55	892SM1	794CM56	794SM1	LE1013* / LE1020* / LE2013* / LE2020*		R 1200 GS ADVENTURE	1200	2006-2007
		892CM55	892SM1	794CM56	794SM1	LE1013* / LE1020* / LE2013* / LE2020*		R 1200 GS ADVENTURE	1200	2008
		892CM55	892SM1	794CM56	794SM1			R 1200 GS ADVENTURE	1200	2009-2013
		960CM55			780SM1			R 1200 GS ADVENTURE	1200	2014
		879CM55		794CM56	794SM1	LE1013* / LE1020* / LE2013* / LE2020*		R 1200 R	1200	2006-2012
		879CM55		794CM56	794SM1			R 1200 R	1200	2013
		892CM55	892SM1	794CM56	794SM1			R 1200 RT	1200	2005-2013
		960CM55			780SM1			R 1200 RT	1200	2014
						LE1013* / LE1019* / LE2013* / LE2019*		R 1200 S	1200	2005
		879CM55		794CM56	794SM1	LE1013* / LE1019* / LE2013* / LE2019*		R 1200 S	1200	2006
		879CM55		794CM56	794SM1	LE1013* / LE1020* / LE2013* / LE2020*		R 1200 S	1200	2007-2008
						LE1013* / LE1020* / LE2013* / LE2020*		R 1200 S	1200	2009
		892CM55	892SM1	794CM56	794SM1			R 1200 ST	1200	2005
		892CM55	892SM1	794CM56	794SM1	LE1013* / LE1020* / LE2013* / LE2020*		R 1200 ST	1200	2006-2008
		960CM55		794CM56	794SM1			R NINE T	1200	2014
		892CM55	892SM1	794CM56	794SM1			K 1300 GT	1300	2009-2010
		879CM55		794CM56	794SM1	LE1013* / LE1020* / LE2013* / LE2020*		K 1300 R - ABS	1300	2008-2011
		879CM55		794CM56	794SM1			K 1300 R - ABS	1300	2012-2014
		892CM55	892SM1	794CM56	794SM1			K 1300 S	1300	2009-2014
		879CM55			780SM1			K 1600 GT	1600	2011-2014
		879CM55			780SM1			K 1600 GTL	1600	2011-2014
								BUELL		
		716CM55		711CM56	711SM1			BLAST	500	2001-2007
		895CM55		711CM56	711SM1			XB9R FIREBOLT	984	2002-2006
		895CM55		711CM56	711SM1			XB9S LIGHTNING	984	2002-2006
		895CM55		711CM56	711SM1			XB9SX CityX	984	2005-2009
		939CM55		938CM56				1125 CR	1125	2008-2009
		939CM55		938CM56				1125 R	1125	2008-2009
		801CM55	801SM1	711CM56	711SM1			M2 CYCLONE	1200	1998-2002
		801CM55	801SM1	711CM56	711SM1			S1 LIGHTNING	1200	1998-2002
		801CM55	801SM1	711CM56	711SM1			S3 THUNDERBOLT	1200	1998-2002
		801CM55	801SM1	711CM56	711SM1			S3T THUNDERBOLT	1200	1998-2002
		801CM55	801SM1	711CM56	711SM1			X1 LIGHTNING	1200	1999-2002
		895CM55		711CM56	711SM1			XB12R FIREBOLT	1200	2004-2009
		895CM55		711CM56	711SM1			XB12S LIGHTNING	1200	2003-2008
		939CM55		711CM56	711SM1			XB12SS / SCG	1200	2009
		895CM55		711CM56	711SM1			XB12SS LIGHTNING LONG	1200	2005-2006
		895CM55		711CM56	711SM1			XB12X ULYSSES	1200	2005-2007
				711CM56	711SM1			XBRR	1340	2006

* articolo in esaurimento / to be discontinued

STRADA / ONROAD

			DISCHI / DISKS									
			ANTERIORE / FRONT								POSTERIORE / REAR	
MODELLO / MODEL	CC	ANNO / YEAR	BATFLY STRADA	SK2	BATFLY ENDURO	R-STX	W-FLO	R-FLO	W-FIX	R-FIX	W-FIX	R-FIX
BULTACO												
LOBITO	50	1999-2006										
CAGIVA												
COCIS	50	1988-1991										
K3	50	1992-1993										
PRIMA	50	1992										
SUPERCITY	50	1992										
W4	50	1992-1995										
COCIS	80	1989-1991										
LOW RIDER	80	1983-1988										
SST	80	1983-1988										
SUPERCITY	80	1992-1993										
SXT	80	1983										
ALETTA ORO	125	1985-1988										
BLUES	125	1989-1992										
BLUES	125	1993-1995										
CRUISER	125	1987-1989										
DAKAR	125	1988-1989										
ELECTRA	125	1984-1988										
ELEFANT	125	1985-1988										
FRECCIA C10 ANNIVERSARY	125	1989										
FRECCIA C12R	125	1989-1991		WK015L / WK015R		STX15						
FRECCIA C9	125	1987-1988										
K7	125	1990-1996										
LUCKY EXPLORER	125	1988-1989										
MITO	125	1991-1992		WK001R		STX01						
MITO	125	1993-1994		WK001R		STX01						
MITO EV	125	1995-2007		WK001R		STX01						
MITO SP525	125	2006-2010		WK001R		STX01						
N90	125	1990-1992										
PLANET	125	1997-2007		WK001L / WK001R		STX01						
RAPTOR	125	2003-2010		WK001R		STX01						
ROADSTER	125	1994										
SST	125	1981-1982										
SST LOW RIDER	125	1983-1986										
SUPERCITY	125	1992-2000		WK001R		STX01						
SXT	125	1981-1983										
TAMANACO	125	1988-1990										
W8	125	1992-1995										
ELEFANT	200	1985-1987										
ROADSTER	200	1994										
SST	250	1980-1986										
SX	250	1983-1987										
ALA AZZURRA	350	1983-1988										
ALA ROSSA	350	1983-1987										
ALA VERDE	350	1983-1986										
ELEFANT	350	1985-1988										
SST	350	1980-1986										
SXT	350	1983-1985										
T4 E	350	1987-1992										
T4 R	350	1987-1992										
W12	350	1993										
CANYON	500	1999-2000								H005FI		
T4 E	500	1987-1990										
T4 R	500	1987-1990										
CANYON	600	1995-1999								H005FI		
RIVER	600	1995-1999		WK001R		STX01						
W16	600	1995-1997										
ALA AZZURRA	650	1985-1988										
ELEFANT	650	1985-1987										
RAPTOR	650	2001-2007		WK039L / WK039R		STX39						RF7530
V-RAPTOR	650	2001-2005										
ELEFANT	750	1987										
ELEFANT	750	1994-1995							H023FID	H023FI	H005RID	H005RI
ELEFANT	900	1990-1992							H023FID	H023FI	H005RID	H005RI

STRADA / ONROAD

	PASTIGLIE / PADS						LEVE / LEVERS	KIT MAGGIORAZIONE OVERSIZE KIT			
	ANTERIORE FRONT				POSTERIORE REAR		ANTERIORE FRONT	ANTERIORE FRONT			
P1R	CM66	CM55	SM1	CM56	SM1		LE*	OKI	MODELLO / MODEL	CC	ANNO / YEAR
									BULTACO		
			741SM1		621SM1				LOBITO	50	1999-2006
									CAGIVA		
			612SM1	612CM56	612SM1				COCIS	50	1988-1991
			612SM1		648SM1				K3	50	1992-1993
			612SM1	612CM56	612SM1				PRIMA	50	1992
				612CM56	612SM1				SUPERCITY	50	1992
			612SM1	612CM56	612SM1				W4	50	1992-1995
			612SM1		648SM1				COCIS	80	1989-1991
			612SM1						LOW RIDER	80	1983-1988
			612SM1						SST	80	1983-1988
			612SM1	612CM56	612SM1				SUPERCITY	80	1992-1993
			612SM1						SXT	80	1983
			612SM1	612CM56	612SM1				ALETTA ORO	125	1985-1988
			684SM1	612CM56	612SM1				BLUES	125	1989-1992
			612SM1	612CM56	612SM1				BLUES	125	1993-1995
				612CM56	612SM1				CRUISER	125	1987-1989
			612SM1		648SM1				DAKAR	125	1988-1989
			648SM1						ELECTRA	125	1984-1988
			612SM1						ELEFANT	125	1985-1988
				612CM56	612SM1				FRECCIA C10 ANNIVERSARY	125	1989
				612CM56	612SM1				FRECCIA C12R	125	1989-1991
				612CM56	612SM1				FRECCIA C9	125	1987-1988
				612CM56	612SM1				K7	125	1990-1996
					648SM1				LUCKY EXPLORER	125	1988-1989
				612CM56	612SM1				MITO	125	1991-1992
	688CM66	688CM55	688SM1	612CM56	612SM1				MITO	125	1993-1994
	688CM66	688CM55	688SM1	612CM56	612SM1				MITO EV	125	1995-2007
	688CM66	688CM55	688SM1	612CM56	612SM1				MITO SP525	125	2006-2010
					669SM1				N90	125	1990-1992
	688CM66	688CM55	688SM1	612CM56	612SM1				PLANET	125	1997-2007
	688CM66	688CM55	688SM1	612CM56	612SM1				RAPTOR	125	2003-2010
			684SM1						ROADSTER	125	1994
			648SM1						SST	125	1981-1982
			648SM1						SST LOW RIDER	125	1983-1986
				612CM56	612SM1				SUPERCITY	125	1992-2000
			648SM1						SXT	125	1981-1983
				612CM56	612SM1				TAMANACO	125	1988-1990
			612SM1	612CM56	612SM1				W8	125	1992-1995
			612SM1						ELEFANT	200	1985-1987
			684SM1						ROADSTER	200	1994
			612SM1						SST	250	1980-1986
			612SM1						SX	250	1983-1987
			612SM1	612CM56	612SM1				ALA AZZURRA	350	1983-1988
			612SM1						ALA ROSSA	350	1983-1987
			612SM1						ALA VERDE	350	1983-1986
				612CM56	612SM1				ELEFANT	350	1985-1988
			612SM1						SST	350	1980-1986
			612SM1						SXT	350	1983-1985
			612SM1						T4 E	350	1987-1992
			612SM1						T4 R	350	1987-1992
					669SM1				W12	350	1993
					725SM1				CANYON	500	1999-2000
			612SM1						T4 E	500	1987-1990
			612SM1						T4 R	500	1987-1990
			696SM1		725SM1				CANYON	600	1995-1999
	688CM66	688CM55		612CM56	612SM1				RIVER	600	1995-1999
					669SM1				W16	600	1995-1997
			612SM1	612CM56	612SM1				ALA AZZURRA	650	1985-1988
				612CM56	612SM1				ELEFANT	650	1985-1987
	784CM66	784CM55		828CM56	828SM1				RAPTOR	650	2001-2007
	784CM66	784CM55		828CM56	828SM1				V-RAPTOR	650	2001-2005
			612SM1	612CM56	612SM1				ELEFANT	750	1987
		780CM55			725SM1				ELEFANT	750	1994-1995
			690SM1		725SM1				ELEFANT	900	1990-1992

* articolo in esaurimento / to be discontinued

STRADA / ONROAD

			DISCHI / DISKS									
			ANTERIORE / FRONT								POSTERIORE / REAR	
MODELLO / MODEL	CC	ANNO / YEAR	BATFLY STRADA	SK2	BATFLY ENDURO	R-STX	W-FLO	R-FLO	W-FIX	R-FIX	W-FIX	R-FIX
ELEFANT	900	1993-1996									H005RID	H005RI
GRAN CANYON	900	1999-2004							H023FID	H023FI	H005RID	H005RI
NAVIGATOR	1000	2000-2005							H023FID	H023FI	H005RID	H005RI
RAPTOR	1000	2000-2006		WK039L / WK039R		STX39						RF7530
V-RAPTOR	1000	2000-2006		WK039L / WK039R		STX39						RF7530
XTRA-RAPTOR	1000	2002-2004		WK039L / WK039R		STX39						RF7530
CCM												
604 RS	600	2001										
604E SPORT	600	1999-2001										
604E SUPERMOTO	600	1999-2001										
C25	600	1996-1998										
DS	644	2002-2006									KT11RID / WF4505	KT11RI
R30	644	2002-2006									KT11RID / WF4505	KT11RI
DERBI												
BLACK DEVIL	50	2004										
DRD RACING R	50	2005										
DRD RACING SM	50	2005										
GPR Nude	50	2004-2009										
GPR R	50	1998-2000										
GPR RACING	50	2004-2010										
GPR REPLICA RACING	50	2002-2003										
VARIANT SPORT-R	50	2001										
GPR CUP	80	2004-2005										
CROSS CITY	125	2007-2008										
GPR	125	2005-2008										
GPR Nude	125	2005-2008										
GPR RACING	125	2004-2008										
MULHACEN	125	2007-2008										
MULHACEN CAFE	125	2008-2011										
MULHACEN	659	2005-2008										
DUCATI												
F3	350	1986-1988										
JUNIOR SS	350	1991-1993		WK001L		STX01					YA08RID	YA08RI
TL PANTAH	350	1984										
TL PANTAH	350	1985										
XL PANTAH	350	1984										
MONSTER	400	1994-1999		WK001L		STX01					YA08RID	YA08RI
MONSTER	400	2001-2006		WK001L		STX01					YA08RID	YA08RI
SS SUPERSPORT	400	1992-1997		WK001L / WK001R		STX01					YA08RID	YA08RI
SS SUPERSPORT JUNIOR	400	1992-1997		WK001L / WK001R		STX01					YA08RID	YA08RI
TL PANTAH	500	1985										
SUPERMONO DESMOQUATTRO	530	1993										
MONSTER	600	1994-1999		WK001L		STX01					YA08RID	YA08RI
MONSTER	600	2000-2002		WK001L		STX01					YA08RID	YA08RI
SS SUPERSPORT	600	1994-2000		WK001L / WK001R		STX01					YA08RID	YA08RI
TL PANTAH	600	1981-1985										
MONSTER	620	2002-2005		WK001L / WK001R		STX01					YA08RID	YA08RI
MONSTER double disk	620	2005-2006				STX80					YA08RID	YA08RI
MONSTER single disk	620	2005-2006		WK001L		STX01					YA08RID	YA08RI
MULTISTRADA double disk	620	2005-2006				STX80					YA08RID	YA08RI
MULTISTRADA single disk	620	2005-2006		WK001L		STX01					YA08RID	YA08RI
SPORT	620	2003-2004		WK001L / WK001R		STX01					YA08RID	YA08RI
SS SUPERSPORT	620	2002-2005		WK001L / WK001R		STX01					YA08RID	YA08RI
DESMO	650	1987-1989										
INDIANA	650	1986-1988										
MONSTER	695	2006-2008				STX80					YA08RID	YA08RI
MONSTER	696	2008-2011		WK001L / WK001R		STX01					YA08RID	YA08RI
MONSTER	696	2012-2014		WK001L / WK001R		STX01					YA08RID	YA08RI
MONSTER ABS	696	2010-2014		WK001L / WK001R		STX01					YA08RID	YA08RI
748 BIPOSTO	748	1995-1997		WK001L / WK001R		STX01					DC02RID	DC02RI
748 BIPOSTO	748	1998-2002		WK001L / WK001R		STX01					DC02RID	DC02RI
748 R	748	2000		WK001L / WK001R		STX01					DC02RID	DC02RI
748 R	748	2001-2002		WK062L / WK062R		STX62					DC02RID	DC02RI
748 S	748	1999-2002		WK001L / WK001R		STX01					DC02RID	DC02RI
748 SP	748	1995-1997		WK001L / WK001R		STX01					DC02RID	DC02RI

STRADA / ONROAD

PASTIGLIE / PADS						LEVE / LEVERS	KIT MAGGIORAZIONE OVERSIZE KIT			
ANTERIORE FRONT				POSTERIORE REAR		ANTERIORE FRONT	ANTERIORE FRONT			
P1R	CM66	CM55	SM1	CM56	SM1	LE*	OKI	MODELLO / MODEL	CC	ANNO / YEAR
		746CM55			746SM1			ELEFANT	900	1993-1996
		716CM55			725SM1			GRAN CANYON	900	1999-2004
		716CM55			725SM1			NAVIGATOR	1000	2000-2005
	784CM66	784CM55		828CM56	828SM1			RAPTOR	1000	2000-2006
	784CM66	784CM55		828CM56	828SM1			V-RAPTOR	1000	2000-2006
	784CM66	784CM55		828CM56	828SM1			XTRA-RAPTOR	1000	2002-2004
								CCM		
		746CM55		773CM56	773SM1			604 RS	600	2001
		746CM55		773CM56	773SM1			604E SPORT	600	1999-2001
		746CM55		773CM56	773SM1			604E SUPERMOTO	600	1999-2001
		746CM55		773CM56	773SM1			C25	600	1996-1998
		746CM55		773CM56	773SM1			DS	644	2002-2006
		746CM55		773CM56	773SM1			R30	644	2002-2006
								DERBI		
			770SM1		621SM1			BLACK DEVIL	50	2004
			770SM1		621SM1			DRD RACING R	50	2005
			770SM1		621SM1			DRD RACING SM	50	2005
			828SM1		621SM1			GPR Nude	50	2004-2009
			741SM1		621SM1			GPR R	50	1998-2000
			828SM1		621SM1			GPR RACING	50	2004-2010
			741SM1		621SM1			GPR REPLICA RACING	50	2002-2003
			621SM1					VARIANT SPORT-R	50	2001
			828SM1		621SM1			GPR CUP	80	2004-2005
			770SM1		878SM1			CROSS CITY	125	2007-2008
					621SM1			GPR	125	2005-2008
		964CM55			621SM1			GPR Nude	125	2005-2008
		964CM55						GPR RACING	125	2004-2008
			770SM1					MULHACEN	125	2007-2008
			828SM1					MULHACEN CAFE	125	2008-2011
	870CM66	870CM55		828CM56	828SM1			MULHACEN	659	2005-2008
								DUCATI		
			612SM1	612CM56	612SM1			F3	350	1986-1988
	688CM66	688CM55		612CM56	612SM1			JUNIOR SS	350	1991-1993
				613CM56	613SM1			TL PANTAH	350	1984
		613CM55						TL PANTAH	350	1985
		613CM55		612CM56	612SM1			XL PANTAH	350	1984
	688CM66	688CM55		612CM56	612SM1			MONSTER	400	1994-1999
	784CM66	784CM55		612CM56	612SM1			MONSTER	400	2001-2006
	688CM66	688CM55		612CM56	612SM1			SS SUPERSPORT	400	1992-1997
	688CM66	688CM55		612CM56	612SM1			SS SUPERSPORT JUNIOR	400	1992-1997
		613CM55		612CM56	612SM1			TL PANTAH	500	1985
	688CM66	688CM55		612CM56	612SM1			SUPERMONO DESMOQUATTRO	530	1993
	688CM66	688CM55		612CM56	612SM1			MONSTER	600	1994-1999
	784CM66	784CM55		612CM56	612SM1			MONSTER	600	2000-2002
	688CM66	688CM55		612CM56	612SM1			SS SUPERSPORT	600	1994-2000
		613CM55		612CM56	612SM1			TL PANTAH	600	1981-1985
	784CM66	784CM55		612CM56	612SM1			MONSTER	620	2002-2005
		746CM55		612CM56	612SM1			MONSTER double disk	620	2005-2006
	784CM66	784CM55		612CM56	612SM1			MONSTER single disk	620	2005-2006
		746CM55		612CM56	612SM1			MULTISTRADA double disk	620	2005-2006
	784CM66	784CM55		828CM56	828SM1			MULTISTRADA single disk	620	2005-2006
	784CM66	784CM55		612CM56	612SM1			SPORT	620	2003-2004
	784CM66	784CM55		612CM56	612SM1			SS SUPERSPORT	620	2002-2005
		613CM55		612CM56	612SM1			DESMO	650	1987-1989
				612CM56	612SM1			INDIANA	650	1986-1988
		746CM55		612CM56	612SM1			MONSTER	695	2006-2008
	784CM66	784CM55		828CM56	828SM1	LE1031* / LE1038* / LE2031* / LE2038*		MONSTER	696	2008-2011
	784CM66	784CM55		828CM56	828SM1			MONSTER	696	2012-2014
	784CM66	784CM55		828CM56	828SM1			MONSTER ABS	696	2010-2014
	688CM66	688CM55		612CM56	612SM1			748 BIPOSTO	748	1995-1997
	784CM66	784CM55		612CM56	612SM1			748 BIPOSTO	748	1998-2002
	784CM66	784CM55		612CM56	612SM1			748 R	748	2000
	870CM66	870CM55		612CM56	612SM1			748 R	748	2001-2002
	784CM66	784CM55		612CM56	612SM1			748 S	748	1999-2002
	688CM66	688CM55		612CM56	612SM1			748 SP	748	1995-1997

* articolo in esaurimento / to be discontinued

STRADA / ONROAD

			DISCHI / DISKS									
			ANTERIORE / FRONT								POSTERIORE / REAR	
MODELLO / MODEL	CC	ANNO / YEAR	BATFLY STRADA	SK2	BATFLY ENDURO	R-STX	W-FLO	R-FLO	W-FIX	R-FIX	W-FIX	R-FIX
748 SPS	748	1998-1999		WK001L / WK001R		STX01					DC02RID	DC02RI
749	748	2002-2007		WK066L / WK066R		STX66					DC04RID	DC04RI
749 R	748	2004-2006		WK066L / WK066R		STX66					DC04RID	DC04RI
749 R	748	2007		WK066L / WK066R		STX66					DC04RID	DC04RI
749 S	748	2003-2006		WK066L / WK066R		STX66					DC04RID	DC04RI
749 S	748	2007		WK066L / WK066R		STX66					DC04RID	DC04RI
F1	750	1985-1987										
INDIANA	750	1989-1990										
LAGUNA SECA	750	1987-1989										
MONSTER	750	1994-1999		WK001L / WK001R		STX01					YA08RID	YA08RI
MONSTER	750	2000-2001		WK001L / WK001R		STX01					YA08RID	YA08RI
MONSTER	750	2002										
PASO	750	1987-1988										
SANTAMONICA	750	1986-1990										
SPORT	750	1988-1990										
SPORT	750	2000-2002		WK001L / WK001R		STX01					YA08RID	YA08RI
SS SUPERSPORT	750	1991-1999		WK001L / WK001R		STX01					YA08RID	YA08RI
SS SUPERSPORT	750	2000-2002		WK001L / WK001R		STX01					YA08RID	YA08RI
MONSTER	800	2003-2004		WK001L / WK001R		STX01					YA08RID	YA08RI
MONSTER 796	800	2011-2014		WK110L / WK110R		STX110					DC05RID	DC05RI
MONSTER 796 ABS	800	2011-2014		WK110L / WK110R		STX110						
MONSTER S2R	800	2005-2006				STX80					DC05RID	DC05RI
SPORT	800	2003-2004		WK001L / WK001R		STX01					YA08RID	YA08RI
SS SUPERSPORT	800	2003-2005		WK001L / WK001R		STX01					YA08RID	YA08RI
848	850	2008-2010		WK118L / WK118R		STX118					DC05RID	DC05RI
848 EVO	850	2011		WK066L / WK066R		STX66					DC05RID	DC05RI
848 EVO	850	2012		WK066L / WK066R		STX66					DC05RID	DC05RI
848 EVO	850	2013		WK066L / WK066R		STX66					DC05RID	DC05RI
STREETFIGHTER	850	2012-2014									DC05RID	DC05RI
851 STRADA - SP	851	1988-1991		WK001L / WK001R		STX01					YA08RID	YA08RI
888 CORSA	888	1990-1994										
888 DESMOQUATTRO	888	1993-1994		WK001L / WK001R		STX01					YA08RID	YA08RI
888 SP	888	1990-1993		WK001L / WK001R		STX01					YA08RID	YA08RI
PANIGALE 899	898	2014		WK095R / WK127L		STX127 / STX95					YA08RID	YA08RI
MONSTER	900	1993-1999		WK001L / WK001R		STX01					YA08RID	YA08RI
MONSTER	900	2000-2004		WK001L / WK001R		STX01					YA08RID	YA08RI
SL 900 SUPERLIGHT	900	1991-1997		WK001L / WK001R		STX01					YA08RID	YA08RI
SPORT	900	2002		WK001L / WK001R		STX01					YA08RID	YA08RI
SS 900	900	1981-1984										
SS SUPERSPORT	900	1991-1997		WK001L / WK001R		STX01					YA08RID	YA08RI
SS SUPERSPORT	900	1998-2002		WK001L / WK001R		STX01					YA08RID	YA08RI
PASO 906	904	1989-1990									YA08RID	YA08RI
PASO 907 I.E.	904	1990-1991		WK015L / WK015R		STX15					YA08RID	YA08RI
916 BIPOSTO	916	1994-1998		WK001L / WK001R		STX01					DC02RID	DC02RI
916 SP	916	1994-1996									DC02RID	DC02RI
916 SPS	916	1997-1998		WK001L / WK001R		STX01					DC02RID	DC02RI
MONSTER S4	916	2001-2003		WK001L / WK001R		STX01					YA08RID	YA08RI
ST4	916	1998-2004		WK001L / WK001R		STX01					YA08RID	YA08RI
916 RACING	926	1994-1997									DC02RID	DC02RI
ST2	944	1997-2003		WK001L / WK001R		STX01					YA08RID	YA08RI
996 BIPOSTO	996	1999-2001		WK001L / WK001R		STX01					DC02RID	DC02RI
996 R	996	2001		WK062L / WK062R		STX62					DC02RID	DC02RI
996 S	996	2001		WK001L / WK001R		STX01					DC02RID	DC02RI
996 SPS	996	1999-2000		WK062L / WK062R							DC02RID	DC02RI
MONSTER S4R	996	2003-2006		WK001L / WK001R		STX01					DC05RID	DC05RI
ST4 S	996	2001-2005		WK001L / WK001R		STX01					YA08RID	YA08RI
ST4 S ABS	996	2003		WK001L / WK001R		STX01					YA08RID	YA08RI
ST4 S ABS	996	2004-2006									YA08RID	YA08RI
998 BIPOSTO	998	2002-2003		WK001L / WK001R		STX01					DC02RID	DC02RI
998 R	998	2002-2003		WK062L / WK062R		STX62					DC02RID	DC02RI
998 S (four pads)	998	2002-2003		WK073L / WK073R		STX73					DC02RID	DC02RI
998 S (two pads)	998	2002-2003		WK001L / WK001R		STX01					DC02RID	DC02RI
999 BIPOSTO	998	2002-2006		WK066L / WK066R		STX66					DC04RID	DC04RI
999 R	998	2002		WK066L / WK066R		STX66					DC04RID	DC04RI
999 R	998	2003-2007		WK066L / WK066R		STX66					DC04RID	DC04RI
999 S	998	2002		WK066L / WK066R		STX66					DC04RID	DC04RI

STRADA / ONROAD

PASTIGLIE / PADS						LEVE / LEVERS	KIT MAGGIORAZIONE OVERSIZE KIT			
ANTERIORE FRONT				POSTERIORE REAR		ANTERIORE FRONT	ANTERIORE FRONT			
P1R	CM66	CM55	SM1	CM56	SM1	LE*	OKI	MODELLO / MODEL	CC	ANNO / YEAR
	784CM66	784CM55		612CM56	612SM1			748 SPS	748	1998-1999
	870CM66	870CM55		828CM56	828SM1			749	748	2002-2007
	870CM66	870CM55		828CM56	828SM1	LE1001* / LE1008* / LE2001* / LE2008*		749 R	748	2004-2006
	870CM66	870CM55		828CM56	828SM1			749 R	748	2007
	870CM66	870CM55		828CM56	828SM1	LE1001* / LE1008* / LE2001* / LE2008*		749 S	748	2003-2006
	870CM66	870CM55		828CM56	828SM1			749 S	748	2007
	688CM66	688CM55		612CM56	612SM1			F1	750	1985-1987
				612CM56	612SM1			INDIANA	750	1989-1990
	688CM66	688CM55		613CM56	613SM1			LAGUNA SECA	750	1987-1989
	688CM66	688CM55		612CM56	612SM1			MONSTER	750	1994-1999
	784CM66	784CM55		612CM56	612SM1			MONSTER	750	2000-2001
	784CM66	784CM55		612CM56	612SM1			MONSTER	750	2002
		613CM55		613CM56	613SM1			PASO	750	1987-1988
		613CM55		613CM56	613SM1			SANTAMONICA	750	1986-1990
		613CM55		613CM56	613SM1			SPORT	750	1988-1990
	784CM66	784CM55		828CM56	828SM1			SPORT	750	2000-2002
	688CM66	688CM55		612CM56	612SM1			SS SUPERSPORT	750	1991-1999
	784CM66	784CM55		612CM56	612SM1			SS SUPERSPORT	750	2000-2002
	784CM66	784CM55		612CM56	612SM1			MONSTER	800	2003-2004
	784CM66	784CM55		828CM56	828SM1			MONSTER 796	800	2011-2014
	784CM66	784CM55		828CM56	828SM1			MONSTER 796 ABS	800	2011-2014
		746CM55		612CM56	612SM1			MONSTER S2R	800	2005-2006
	784CM66	784CM55		612CM56	612SM1			SPORT	800	2003-2004
	784CM66	784CM55		612CM56	612SM1			SS SUPERSPORT	800	2003-2005
	784CM66	784CM55		828CM56	828SM1	LE1033* / LE1040* / LE2033* / LE2040*		848	850	2008-2010
P1R930	930CM66	930CM55		828CM56	828SM1	LE1001* / LE1008* / LE2001* / LE2008*		848 EVO	850	2011
P1R930	930CM66	930CM55		828CM56	828SM1	LE1033* / LE1040* / LE2033* / LE2040*		848 EVO	850	2012
P1R930	930CM66	930CM55		828CM56	828SM1			848 EVO	850	2013
	784CM66	784CM55		828CM56	828SM1	LE1001* / LE1008* / LE2001* / LE2008*		STREETFIGHTER	850	2012-2014
	688CM66	688CM55		612CM56	612SM1			851 STRADA - SP	851	1988-1991
	688CM66	688CM55		612CM56	612SM1			888 CORSA	888	1990-1994
	688CM66	688CM55		612CM56	612SM1			888 DESMOQUATTRO	888	1993-1994
	688CM66	688CM55		612CM56	612SM1			888 SP	888	1990-1993
		960CM55		828CM56	828SM1			PANIGALE 899	898	2014
	688CM66	688CM55		612CM56	612SM1			MONSTER	900	1993-1999
	784CM66	784CM55		612CM56	612SM1			MONSTER	900	2000-2004
	688CM66	688CM55		612CM56	612SM1			SL 900 SUPERLIGHT	900	1991-1997
	784CM66	784CM55		828CM56	828SM1			SPORT	900	2002
		613CM55		613CM56	613SM1			SS 900	900	1981-1984
	688CM66	688CM55		612CM56	612SM1			SS SUPERSPORT	900	1991-1997
	784CM66	784CM55		828CM56	828SM1			SS SUPERSPORT	900	1998-2002
			644SM1	613CM56	613SM1			PASO 906	904	1989-1990
	688CM66	688CM55		612CM56	612SM1			PASO 907 I.E.	904	1990-1991
	688CM66	688CM55		612CM56	612SM1			916 BIPOSTO	916	1994-1998
	688CM66	688CM55		612CM56	612SM1			916 SP	916	1994-1996
	784CM66	784CM55		612CM56	612SM1			916 SPS	916	1997-1998
	784CM66	784CM55		612CM56	612SM1			MONSTER S4	916	2001-2003
	784CM66	784CM55		828CM56	828SM1			ST4	916	1998-2004
P1R776	776CM66	776CM55						916 RACING	926	1994-1997
	784CM66	784CM55		828CM56	828SM1			ST2	944	1997-2003
	784CM66	784CM55		612CM56	612SM1			996 BIPOSTO	996	1999-2001
	870CM66	870CM55		612CM56	612SM1			996 R	996	2001
	784CM66	784CM55		612CM56	612SM1			996 S	996	2001
	784CM66	784CM55		612CM56	612SM1			996 SPS	996	1999-2000
	784CM66	784CM55		612CM56	612SM1	LE1030* / LE1037* / LE2030* / LE2037*		MONSTER S4R	996	2003-2006
	784CM66	784CM55		828CM56	828SM1			ST4 S	996	2001-2005
	784CM66	784CM55		828CM56	828SM1			ST4 S ABS	996	2003
	784CM66	784CM55		828CM56	828SM1			ST4 S ABS	996	2004-2006
	784CM66	784CM55		612CM56	612SM1			998 BIPOSTO	998	2002-2003
	870CM66	870CM55		612CM56	612SM1			998 R	998	2002-2003
	870CM66	870CM55		612CM56				998 S (four pads)	998	2002-2003
	784CM66			612CM56	612SM1			998 S (two pads)	998	2002-2003
	870CM66	870CM55		828CM56	828SM1			999 BIPOSTO	998	2002-2006
	870CM66	870CM55		828CM56	828SM1			999 R	998	2002
	870CM66	870CM55		828CM56	828SM1	LE1001* / LE1008* / LE2001* / LE2008*		999 R	998	2003-2007
	870CM66	870CM55		828CM56	828SM1			999 S	998	2002

* articolo in esaurimento / to be discontinued

STRADA / ONROAD

			DISCHI / DISKS									
			ANTERIORE / FRONT								POSTERIORE / REAR	
MODELLO / MODEL	CC	ANNO / YEAR	BATFLY STRADA	SK2	BATFLY ENDURO	R-STX	W-FLO	R-FLO	W-FIX	R-FIX	W-FIX	R-FIX
999 S	998	2003-2007		WK066L / WK066R		STX66					DC04RID	DC04RI
MONSTER S4RS	998	2006-2008										
DESMOSEDICI RR	1000	2008-2009	BY795L / BY795R	WK095L / WK095R							DC04RID	DC04RI
GT	1000	2006-2010		WK001L / WK001R		STX01					YA08RID	YA08RI
GT TOURING	1000	2009		WK001L / WK001R		STX01					YA08RID	YA08RI
MONSTER	1000	2003-2005		WK001L / WK001R		STX01					YA08RID	YA08RI
MONSTER S	1000	2003-2005		WK001L / WK001R		STX01					YA08RID	YA08RI
MONSTER S2R	1000	2006-2007		WK001L / WK001R		STX01					DC05RID	DC05RI
MULTISTRADA DS	1000	2003-2006							DC05FID	RF7111	DC05RID	DC05RI
MULTISTRADA DS S	1000	2005-2006							DC05FID	RF7111	DC05RID	DC05RI
PAUL SMART LE	1000	2006-2007		WK001L / WK001R		STX01					YA08RID	YA08RI
REPLICA	1000	1984-1985										
S4R Testastretta MONSTER	1000	2007-2008		WK066L / WK066R		STX66					DC05RID	DC05RI
S4RS Testastretta MONSTER	1000	2006-2008		WK066L / WK066R		STX66					DC05RID	DC05RI
SPORT	1000	2006-2008		WK001L / WK001R		STX01					YA08RID	YA08RI
SPORT S	1000	2007-2009		WK001L / WK001R		STX01					YA08RID	YA08RI
SS SUPERSPORT	1000	2003-2006		WK001L / WK001R		STX01					YA08RID	YA08RI
ST3	1000	2004-2006		WK001L / WK001R		STX01					YA08RID	YA08RI
ST3 S ABS	1000	2006-2007		WK001L / WK001R		STX01					YA08RID	YA08RI
1098	1100	2007-2008	BY795L / BY795R	WK095L / WK095R							DC06RID	RF7520
1098 S	1100	2007-2008	BY795L / BY795R	WK095L / WK095R							DC06RID	RF7520
1098 S TRICOLORE	1100	2007-2008	BY795L / BY795R	WK095L / WK095R							DC06RID	RF7520
MONSTER 1100	1100	2009-2010		WK110L / WK110R		STX110					DC05RID	DC05RI
MONSTER 1100 ABS	1100	2010		WK110L / WK110R		STX110						
MONSTER 1100 S	1100	2009-2010		WK118L / WK118R		STX118					DC05RID	DC05RI
MONSTER 1100 S ABS	1100	2010		WK118L / WK118R		STX118						
MONSTER DIESEL	1100	2013		WK110L / WK110R		STX110						
MONSTER EVO	1100	2011-2012		WK110L / WK110R		STX110					DC05RID	DC05RI
MONSTER EVO ABS	1100	2011-2013		WK110L / WK110R		STX110						
MULTISTRADA DS	1100	2007-2009							DC05FID	RF7111	DC05RID	DC05RI
MULTISTRADA DS	1100	2010										
MULTISTRADA DS S	1100	2007-2009							DC05FID	RF7111	DC05RID	DC05RI
MULTISTRADA DS S	1100	2010										
STREETFIGHTER	1100	2009-2011		WK095L / WK095R		STX95					DC06RID	RF7520
STREETFIGHTER S	1100	2009-2011									DC06RID	RF7520
STREETFIGHTER S	1100	2012									DC06RID	RF7520
STREETFIGHTER S	1100	2013									DC06RID	RF7520
1198	1198	2009-2011	BY795L / BY795R	WK095L / WK095R		STX95					DC06RID	RF7520
1198 S	1198	2009-2010									DC06RID	RF7520
1198 SP	1198	2011									DC06RID	RF7520
1098 R	1200	2008-2009									DC06RID	RF7520
DIAVEL	1200	2011		WK110L / WK110R		STX110					WF7517	RF7525
DIAVEL	1200	2012		WK110L / WK110R		STX110					WF7517	RF7525
DIAVEL	1200	2013		WK110L / WK110R		STX110					WF7517	RF7525
DIAVEL AMG	1200	2013		WK110L / WK110R		STX110					WF7517	RF7525
DIAVEL CARBON	1200	2011		WK110L / WK110R		STX110					WF7517	RF7525
DIAVEL CARBON	1200	2012		WK110L / WK110R		STX110					WF7517	RF7525
DIAVEL STRADA	1200	2014		WK110L / WK110R		STX110					WF7517	RF7525
MONSTER	1200	2014		WK110L / WK110R							WF7516	RF7524
MONSTER S	1200	2014										
MULTISTRADA	1200	2010-2011		WK110L / WK110R		STX110					WF7516	RF7524
MULTISTRADA	1200	2012		WK110L / WK110R		STX110					WF7516	RF7524
MULTISTRADA ABS	1200	2010-2013		WK110L / WK110R		STX110					WF7516	RF7524
MULTISTRADA ABS	1200	2014		WK110L / WK110R		STX110					WF7516	RF7524
MULTISTRADA S ABS	1200	2010-2011		WK110L / WK110R		STX110					WF7516	RF7524
MULTISTRADA S ABS	1200	2012		WK110L / WK110R		STX110					WF7516	RF7524
MULTISTRADA S ABS PIKES PEAK	1200	2012-2014		WK110L / WK110R		STX110					WF7516	RF7524
MULTISTRADA S GT	1200	2012-2013		WK110L / WK110R		STX110					WF7516	RF7524
MULTISTRADA S SPORT	1200	2011-2012		WK110L / WK110R							WF7516	RF7524
MULTISTRADA S TOURING	1200	2010-2014		WK110L / WK110R							WF7516	RF7524
MULTISTRADA TOURING ABS	1200	2010-2011		WK110L / WK110R		STX110						
PANIGALE	1200	2012-2013	BY795L / BY795R	WK095L / WK095R							WF7516	RF7524
PANIGALE ABS	1200	2012		WK095R / WK127L		STX127 / STX95					WF7516	RF7524
PANIGALE ABS	1200	2013-2014		WK095R / WK127L		STX127 / STX95					WF7516	RF7524
PANIGALE R	1200	2014		WK095R / WK127L		STX127 / STX95					WF7516	RF7524
PANIGALE S	1200	2012-2013	BY795L / BY795R	WK095L / WK095R							WF7516	RF7524

STRADA / ONROAD

PASTIGLIE / PADS						LEVE / LEVERS	KIT MAGGIORAZIONE OVERSIZE KIT			
ANTERIORE FRONT				POSTERIORE REAR		ANTERIORE FRONT	ANTERIORE FRONT			
P1R	CM66	CM55	SM1	CM56	SM1	LE*	OKI	MODELLO / MODEL	CC	ANNO / YEAR
	870CM66	870CM55		828CM56	828SM1	LE1001* / LE1008* / LE2001* / LE2008*		999 S	998	2003-2007
						LE1001* / LE1008* / LE2001* / LE2008*		MONSTER S4RS	998	2006-2008
P1R930	930CM66	930CM55		828CM56	828SM1			DESMOSEDICI RR	1000	2008-2009
		780CM55		773CM56	773SM1			GT	1000	2006-2010
		780CM55		773CM56	773SM1			GT TOURING	1000	2009
	784CM66	784CM55		612CM56	612SM1			MONSTER	1000	2003-2005
	784CM66	784CM55		612CM56	612SM1			MONSTER S	1000	2003-2005
	784CM66	784CM55		828CM56	828SM1			MONSTER S2R	1000	2006-2007
	784CM66	784CM55		828CM56	828SM1			MULTISTRADA DS	1000	2003-2006
	784CM66	784CM55		828CM56	828SM1			MULTISTRADA DS S	1000	2005-2006
		780CM55		773CM56	773SM1			PAUL SMART LE	1000	2006-2007
		613CM55		828CM56	828SM1			REPLICA	1000	1984-1985
	870CM66	870CM55		612CM56	612SM1			S4R Testastretta MONSTER	1000	2007-2008
	870CM66	870CM55		612CM56	612SM1			S4RS Testastretta MONSTER	1000	2006-2008
		780CM55		773CM56	773SM1			SPORT	1000	2006-2008
		780CM55		773CM56	773SM1			SPORT S	1000	2007-2009
	784CM66	784CM55		612CM56	612SM1			SS SUPERSPORT	1000	2003-2006
	784CM66	784CM55		828CM56	828SM1			ST3	1000	2004-2006
	784CM66	784CM55		828CM56	828SM1			ST3 S ABS	1000	2006-2007
P1R930	930CM66	930CM55		828CM56	828SM1	LE1001* / LE1008* / LE2001* / LE2008*		1098	1100	2007-2008
P1R930	930CM66	930CM55		828CM56	828SM1	LE1001* / LE1008* / LE2001* / LE2008*		1098 S	1100	2007-2008
P1R930	930CM66	930CM55		828CM56	828SM1	LE1001* / LE1008* / LE2001* / LE2008*		1098 S TRICOLORE	1100	2007-2008
	784CM66	784CM55		828CM56	828SM1	LE1001* / LE1008* / LE2001* / LE2008*		MONSTER 1100	1100	2009-2010
	784CM66	784CM55		828CM56	828SM1	LE1001* / LE1008* / LE2001* / LE2008*		MONSTER 1100 ABS	1100	2010
	784CM66	784CM55		828CM56	828SM1	LE1001* / LE1008* / LE2001* / LE2008*		MONSTER 1100 S	1100	2009-2010
	784CM66	784CM55		828CM56	828SM1	LE1001* / LE1008* / LE2001* / LE2008*		MONSTER 1100 S ABS	1100	2010
	784CM66	784CM55		828CM56	828SM1			MONSTER DIESEL	1100	2013
	784CM66	784CM55		828CM56	828SM1	LE1033* / LE1040* / LE2033* / LE2040*		MONSTER EVO	1100	2011-2012
	784CM66	784CM55		828CM56	828SM1			MONSTER EVO ABS	1100	2011-2013
	784CM66	784CM55		828CM56	828SM1	LE1030* / LE1037* / LE2030* / LE2037*		MULTISTRADA DS	1100	2007-2009
						LE1030* / LE1037* / LE2030* / LE2037*		MULTISTRADA DS	1100	2010
	784CM66	784CM55		828CM56	828SM1	LE1030* / LE1037* / LE2030* / LE2037*		MULTISTRADA DS S	1100	2007-2009
						LE1030* / LE1037* / LE2030* / LE2037*		MULTISTRADA DS S	1100	2010
P1R930	930CM66	930CM55		828CM56	828SM1	LE1001* / LE1008* / LE2001* / LE2008*		STREETFIGHTER	1100	2009-2011
P1R930	930CM66	930CM55		828CM56	828SM1	LE1001* / LE1008* / LE2001* / LE2008*		STREETFIGHTER S	1100	2009-2011
P1R930	930CM66	930CM55		828CM56	828SM1	LE1033* / LE1040* / LE2033* / LE2040*		STREETFIGHTER S	1100	2012
P1R930	930CM66	930CM55		828CM56	828SM1			STREETFIGHTER S	1100	2013
P1R930	930CM66	930CM55		828CM56	828SM1	LE1001* / LE1008* / LE2001* / LE2008*		1198	1198	2009-2011
P1R930	930CM66	930CM55		828CM56	828SM1	LE1001* / LE1008* / LE2001* / LE2008*		1198 S	1198	2009-2010
P1R930	930CM66	930CM55		828CM56	828SM1	LE1001* / LE1008* / LE2001* / LE2008*		1198 SP	1198	2011
P1R930	930CM66	930CM55		828CM56	828SM1			1098 R	1200	2008-2009
P1R930	930CM66	930CM55			780SM1	LE1001* / LE1008* / LE2001* / LE2008*		DIAVEL	1200	2011
P1R930	930CM66	930CM55			780SM1	LE1033* / LE1040* / LE2033* / LE2040*		DIAVEL	1200	2012
P1R930	930CM66	930CM55			780SM1			DIAVEL	1200	2013
P1R930	930CM66	930CM55			780SM1			DIAVEL AMG	1200	2013
P1R930	930CM66	930CM55			780SM1	LE1001* / LE1008* / LE2001* / LE2008*		DIAVEL CARBON	1200	2011
P1R930	930CM66	930CM55			780SM1			DIAVEL CARBON	1200	2012
P1R930	930CM66	930CM55			780SM1			DIAVEL STRADA	1200	2014
		960CM55		828CM56	828SM1			MONSTER	1200	2014
P1R930	930CM66	930CM55		828CM56	828SM1			MONSTER S	1200	2014
	784CM66	784CM55		828CM56	828SM1	LE1044* / LE2044* / LE2045*		MULTISTRADA	1200	2010-2011
	784CM66	784CM55		828CM56	828SM1	LE1033* / LE1040* / LE2033* / LE2040*		MULTISTRADA	1200	2012
	784CM66	784CM55		828CM56	828SM1	LE1044* / LE2044* / LE2045*		MULTISTRADA ABS	1200	2010-2013
	784CM66	784CM55		828CM56	828SM1			MULTISTRADA ABS	1200	2014
	784CM66	784CM55		828CM56	828SM1	LE1044* / LE2044* / LE2045*		MULTISTRADA S ABS	1200	2010-2011
	784CM66	784CM55		828CM56	828SM1			MULTISTRADA S ABS	1200	2012
	784CM66	784CM55		828CM56	828SM1			MULTISTRADA S ABS PIKES PEAK	1200	2012-2014
	784CM66	784CM55		828CM56	828SM1			MULTISTRADA S GT	1200	2012-2013
	784CM66	784CM55		828CM56	828SM1			MULTISTRADA S SPORT	1200	2011-2012
	784CM66	784CM55		828CM56	828SM1			MULTISTRADA S TOURING	1200	2010-2014
	784CM66	784CM55		828CM56	828SM1	LE1044* / LE2044* / LE2045*		MULTISTRADA TOURING ABS	1200	2010-2011
P1R930	930CM66	930CM55		828CM56	828SM1	LE1033* / LE1040* / LE2033* / LE2040*		PANIGALE	1200	2012-2013
P1R930	930CM66	930CM55		828CM56	828SM1	LE1033* / LE1040* / LE2033* / LE2040*		PANIGALE ABS	1200	2012
P1R930	930CM66	930CM55		828CM56	828SM1			PANIGALE ABS	1200	2013-2014
P1R930	930CM66	930CM55		828CM56	828SM1			PANIGALE R	1200	2014
P1R930	930CM66	930CM55		828CM56	828SM1	LE1033* / LE1040* / LE2033* / LE2040*		PANIGALE S	1200	2012-2013

* articolo in esaurimento / to be discontinued

STRADA / ONROAD

			DISCHI / DISKS									
			ANTERIORE / FRONT								POSTERIORE / REAR	
MODELLO / MODEL	CC	ANNO / YEAR	BATFLY STRADA	SK2	BATFLY ENDURO	R-STX	W-FLO	R-FLO	W-FIX	R-FIX	W-FIX	R-FIX
PANIGALE S ABS	1200	2012-2013		WK095R / WK127L		STX127 / STX95					WF7516	RF7524
PANIGALE S ABS	1200	2014		WK095R / WK127L		STX127 / STX95					WF7516	RF7524
PANIGALE S TRICOLORE	1200	2012-2013	BY795L / BY795R	WK095L / WK095R							WF7516	RF7524
SUPERLEGGERA	1200	2014										
FANTIC M.												
50-5	50	1989-1991										
BIG WHEELS	50	1991-1994							YA12FID	YA12FI		
K-ROO	50	1992-2000										
KOALA	50	1988-1995										
OASIS	50	1988-1990										
RC CABALLERO	50	1990-1993										
RC CABALLERO	50	1994-1995										
RIDER	50	1986-1987										
SECTION	50	1996-2000										
STRADA	50	1983-1986										
SECTION	80	1996-2000										
HP1 SPORT	125	1985-1988										
SECTION	249	1996-2000										
COACH	250	1992-2000										
K-ROO	250	1991-1995										
RAIDER LC	250	1984-1986										
GAS GAS												
EC ROLLER	50	2001										
EC ROOKIE	50	2001										
SM ROOKIE	50	2001										
TXT BOY	50	2004										
HOBBY	200	2007					GA04FLD				KT11RID / WF4505	KT11RI
GT 25	250	1990-1992										
GILERA												
EAGLET	50	1994										
RC TOP RALLY	50	1989-1992										
SIOUX	50	1991-1996										
ZULU	50	2001-2002										
APACHE	125	1991-1993										
ARIZONA	125	1983-1985										
ARIZONA HAWK	125	1985-1988										
COUGAR	125	1999										
CRONO	125	1991-1994										
CX	125	1991-1994										
FAST BIKE	125	1987-1989										
FREE STYLE	125	1991-1993										
GFR	125	1993-1994				STX01						
KK	125	1985-1989										
KZ	125	1985-1989										
MX1	125	1988-1990										
MXR	125	1989-1992										
R1	125	1988-1989										
RRT NEBRASCA	125	1986-1988										
RTX	125	1986-1988										
RV	125	1984-1988										
RX	125	1984-1988										
SP 01	125	1989										
SP 02	125	1990-1991										
XR1	125	1988-1989										
XR2	125	1988-1989										
ARIZONA	200	1985-1987										
ARIZONA HAWK	200	1986-1987										
RV ES	200	1985-1988										
RX	200	1983-1986										
MX LC	250	1983-1985										
RALLY	250	1987-1989										
DAKOTA	350	1986-1989										
DAKOTA	500	1987-1989										
PIUMA	500	1990-1991										
SATURNO	500	1988-1989										

STRADA / ONROAD

PASTIGLIE / PADS						LEVE / LEVERS	KIT MAGGIORAZIONE OVERSIZE KIT			
ANTERIORE FRONT				POSTERIORE REAR		ANTERIORE FRONT	ANTERIORE FRONT			
P1R	CM66	CM55	SM1	CM56	SM1	LE*	OKI	MODELLO / MODEL	CC	ANNO / YEAR
P1R930	930CM66	930CM55		828CM56	828SM1	LE1033* / LE1040* / LE2033* / LE2040*		PANIGALE S ABS	1200	2012-2013
P1R930	930CM66	930CM55		828CM56	828SM1			PANIGALE S ABS	1200	2014
P1R930	930CM66	930CM55		828CM56	828SM1	LE1033* / LE1040* / LE2033* / LE2040*		PANIGALE S TRICOLORE	1200	2012-2013
P1R930	930CM66	930CM55		828CM56	828SM1			SUPERLEGGERA	1200	2014
								FANTIC M.		
			621SM1		671SM1			50-5	50	1989-1991
			744SM1		743SM1			BIG WHEELS	50	1991-1994
			621SM1					K-ROO	50	1992-2000
			648SM1		648SM1			KOALA	50	1988-1995
			648SM1		648SM1			OASIS	50	1988-1990
			612SM1		648SM1			RC CABALLERO	50	1990-1993
			741SM1		743SM1			RC CABALLERO	50	1994-1995
			669SM1					RIDER	50	1986-1987
			621SM1		621SM1			SECTION	50	1996-2000
			669SM1					STRADA	50	1983-1986
			621SM1		621SM1			SECTION	80	1996-2000
			648SM1					HP1 SPORT	125	1985-1988
			621SM1		621SM1			SECTION	249	1996-2000
			621SM1		621SM1			COACH	250	1992-2000
			621SM1		621SM1			K-ROO	250	1991-1995
			684SM1					RAIDER LC	250	1984-1986
								GAS GAS		
			772SM1		701SM1			EC ROLLER	50	2001
			741SM1					EC ROOKIE	50	2001
			741SM1					SM ROOKIE	50	2001
			621SM1		621SM1			TXT BOY	50	2004
			772SM1		701SM1			HOBBY	200	2007
			621SM1		621SM1			GT 25	250	1990-1992
								GILERA		
			761SM1		743SM1			EAGLET	50	1994
			743SM1		743SM1			RC TOP RALLY	50	1989-1992
			743SM1		743SM1			SIOUX	50	1991-1996
			621SM1		621SM1			ZULU	50	2001-2002
					685SM1			APACHE	125	1991-1993
			612SM1					ARIZONA	125	1983-1985
			684SM1					ARIZONA HAWK	125	1985-1988
			684SM1					COUGAR	125	1999
			726SM1	612CM56	612SM1			CRONO	125	1991-1994
			726SM1					CX	125	1991-1994
			684SM1					FAST BIKE	125	1987-1989
			726SM1					FREE STYLE	125	1991-1993
			726SM1					GFR	125	1993-1994
			684SM1					KK	125	1985-1989
			684SM1					KZ	125	1985-1989
			726SM1					MX1	125	1988-1990
			726SM1					MXR	125	1989-1992
			684SM1					R1	125	1988-1989
			684SM1					RRT NEBRASCA	125	1986-1988
			684SM1					RTX	125	1986-1988
			684SM1					RV	125	1984-1988
			612SM1					RX	125	1984-1988
			726SM1					SP 01	125	1989
			726SM1					SP 02	125	1990-1991
			684SM1	612CM56	612SM1			XR1	125	1988-1989
			684SM1	612CM56	612SM1			XR2	125	1988-1989
			612SM1					ARIZONA	200	1985-1987
			684SM1					ARIZONA HAWK	200	1986-1987
			684SM1	612CM56	612SM1			RV ES	200	1985-1988
			612SM1					RX	200	1983-1986
			612SM1					MX LC	250	1983-1985
			684SM1	612CM56	612SM1			RALLY	250	1987-1989
			684SM1					DAKOTA	350	1986-1989
			684SM1					DAKOTA	500	1987-1989
	688CM66	688CM55		612CM56	612SM1			PIUMA	500	1990-1991
	688CM66	688CM55		612CM56	612SM1			SATURNO	500	1988-1989

* articolo in esaurimento / to be discontinued

STRADA / ONROAD

			DISCHI / DISKS									
			ANTERIORE / FRONT								POSTERIORE / REAR	
MODELLO / MODEL	CC	ANNO / YEAR	BATFLY STRADA	SK2	BATFLY ENDURO	R-STX	W-FLO	R-FLO	W-FIX	R-FIX	W-FIX	R-FIX
NORDWEST	600	1991-1993										
RC FOUR VALVE	600	1988-1993										
RC R	600	1991-1994										
XRT	600	1988-1989										
HERO												
GLAMOUR (Rear Drum Model)	125	2011-2012								H007FI		
HUNK (Rear Drum Model)	150	2011-2012								H007FI		
HIGHLAND												
V2 OUTBACK (EBE)	950	1999										
HONDA												
CB	50	1980-1981										
MB S	50	1980-1982										
MB5	50	1981-1982										
MBX	50	1980-1982										
MBX	50	1983-1985										
MRX	50	1988										
NSR	50	1987-1992										
NSR	50	1993-1999										
NSR MINI	50	2000-2004										
MBX	80	1986										
MBX DX	80	1982-1983										
MBX FWD	80	1983-1986										
MBX SW SWD	80	1983-1985										
MCX	80	1982										
MTX R	80	1987								H013FI		
NSR R	80	1987-1992										
NSR	100	1987-1992										
NSR	100	1993-1999										
CA REBEL (Rear Drum Model)	125	1995-1996								H007FI		
CA REBEL (Rear Drum Model)	125	1997-2000								H007FI		
CB	125	1983-1986										
CBF (Rear Drum Model)	125	2009-2012								H007FI		
CBR R	125	2003-2011							H022FID	H022FI	H009RID	H009RI
CBR R	125	2012-2014							WF7108		H009RID	H009RI
CBX CUSTOM	125	1988-1990										
CRM (Italia)	125	1990										
MBX RWB	125	1984-1986										
MSX (GROM)	125	2013-2014							WF8114		WF8510	
MTX	125	1985-1989										
MTX R	125	1984-1988										
NS F	125	1985-1987										
NS ROTHMANS	125	1986-1987										
NSR	125	1987-1989										
NSR F	125	1990-1992										
NSR F RAIDEN	125	1993-2003										
NSR R	125	1990-2003										
NX TRANSCITY	125	1990-1998										
RS	125	1988-1989										
RS GP	125	1990										
RS GP	125	1991-1996		WK004L / WK004R		STX04						
RS GP	125	1997-2005		WK004L / WK004R		STX04						
RS R	125	1990										
RS R	125	1991-1996		WK004L / WK004R		STX04						
RS R	125	1997-2005		WK004L / WK004R		STX04						
XL	125	1985-1988										
XL R	125	1986-1990										
XLR R	125	1997-2003								H013FI		
XLV VARADERO	125	2001-2011									H009RID	H009RI
NSR	150	2002										
XL	200	1985-1987										
XL Paris-Dakar	200	1987-1991										
SL	230	1997-2001							H009FID	H009FI	H009RID	H009RI
AX-1	250	1988										H002RI
CB	250	1983-1984										
CB	250	1985-1987										

STRADA / ONROAD

PASTIGLIE / PADS						LEVE / LEVERS	KIT MAGGIORAZIONE OVERSIZE KIT			
ANTERIORE FRONT				POSTERIORE REAR		ANTERIORE FRONT	ANTERIORE FRONT			
P1R	CM66	CM55	SM1	CM56	SM1	LE*	OKI	MODELLO / MODEL	CC	ANNO / YEAR
			726SM1	612CM56	612SM1			NORDWEST	600	1991-1993
					685SM1			RC FOUR VALVE	600	1988-1993
					685SM1			RC R	600	1991-1994
			684SM1	612CM56	612SM1			XRT	600	1988-1989
								HERO		
								GLAMOUR (Rear Drum Model)	125	2011-2012
								HUNK (Rear Drum Model)	150	2011-2012
								HIGHLAND		
		746CM55		773CM56	773SM1			V2 OUTBACK (EBE)	950	1999
								HONDA		
			703SM1					CB	50	1980-1981
			703SM1					MB S	50	1980-1982
			703SM1					MB5	50	1981-1982
			703SM1					MBX	50	1980-1982
			673SM1					MBX	50	1983-1985
			703SM1					MRX	50	1988
			673SM1		701SM1			NSR	50	1987-1992
			725SM1					NSR	50	1993-1999
			725SM1					NSR MINI	50	2000-2004
			667SM1					MBX	80	1986
			673SM1					MBX DX	80	1982-1983
			703SM1					MBX FWD	80	1983-1986
			673SM1					MBX SW SWD	80	1983-1985
			673SM1					MCX	80	1982
			667SM1					MTX R	80	1987
					701SM1			NSR R	80	1987-1992
			673SM1					NSR	100	1987-1992
			725SM1					NSR	100	1993-1999
			795SM1					CA REBEL (Rear Drum Model)	125	1995-1996
								CA REBEL (Rear Drum Model)	125	1997-2000
			703SM1					CB	125	1983-1986
			902SM1					CBF (Rear Drum Model)	125	2009-2012
			902SM1		867SM1			CBR R	125	2003-2011
			902SM1		965SM1			CBR R	125	2012-2014
			654SM1					CBX CUSTOM	125	1988-1990
			684SM1	612CM56	612SM1			CRM (Italia)	125	1990
			673SM1					MBX RWB	125	1984-1986
			902SM1		965SM1			MSX (GROM)	125	2013-2014
			684SM1					MTX	125	1985-1989
			667SM1	612CM56	612SM1			MTX R	125	1984-1988
			684SM1					NS F	125	1985-1987
			684SM1	612CM56	612SM1			NS ROTHMANS	125	1986-1987
			684SM1	612CM56	612SM1			NSR	125	1987-1989
			684SM1		761SM1			NSR F	125	1990-1992
			684SM1	612CM56	612SM1			NSR F RAIDEN	125	1993-2003
			684SM1	612CM56	612SM1			NSR R	125	1990-2003
			684SM1					NX TRANSCITY	125	1990-1998
			690SM1					RS	125	1988-1989
		716CM55	716SM1					RS GP	125	1990
		756CM55	756SM1					RS GP	125	1991-1996
	688CM66	688CM55	688SM1					RS GP	125	1997-2005
		716CM55	716SM1					RS R	125	1990
		756CM55	756SM1					RS R	125	1991-1996
	688CM66	688CM55	688SM1					RS R	125	1997-2005
			684SM1					XL	125	1985-1988
			667SM1					XL R	125	1986-1990
		716CM55	716SM1					XLR R	125	1997-2003
			725SM1		867SM1			XLV VARADERO	125	2001-2011
				696CM56	696SM1			NSR	150	2002
			684SM1					XL	200	1985-1987
			684SM1					XL Paris-Dakar	200	1987-1991
			772SM1		701SM1			SL	230	1997-2001
			700SM1					AX-1	250	1988
			645SM1					CB	250	1983-1984
			667SM1					CB	250	1985-1987

* articolo in esaurimento / to be discontinued

STRADA / ONROAD

			DISCHI / DISKS									
			ANTERIORE / FRONT								POSTERIORE / REAR	
MODELLO / MODEL	CC	ANNO / YEAR	BATFLY STRADA	SK2	BATFLY ENDURO	R-STX	W-FLO	R-FLO	W-FIX	R-FIX	W-FIX	R-FIX
CB	250	1991-2006									H005RID	H005RI
CB F HORNET	250	1996-2001		WK004R		STX04					H022RID	H022RI
CB REBEL	250	1986-1988										
CBF (Rear Drum Model)	250	2004-2008							WF7108			
CBR F	250	1986-1987										
CBR HURRICANE	250	1987-1988										
CBR R	250	2011-2013		WK123R							H022RID	H022RI
CBR R ABS	250	2011-2013		WK123R							WF7522	
CBR RJ	250	1988-1990										
CBX (Rear Drum Model)	250	1984-1998								H007FI		
CBX RSE (Rear Drum Model)	250	1984-1986										
CMX C REBEL (Grimeca calip. - Rear Drum)	250	1997-2000								H007FI		
CMX C REBEL (Nissin caliper - Rear Drum)	250	1996								H007FI		
CRM R	250	1989-1990										
CRM R	250	1991-1993								H013FI	H009RID	H009RI
FTR	250	1986-1988										
GB CLUBMAN	250	1988										
NS R	250	1985-1986										
NSR R	250	1987										
NSR R	250	1988-1989										
NX	250	1989										
RS GP	250	1990-1992		WK004L / WK004R		STX04						
RS GP	250	1993-1997		WK004L / WK004R		STX04						
RS R	250	1990-1992		WK004L / WK004R		STX04						
RS R	250	1993-1997		WK004L / WK004R		STX04						
TSR	250	1999		WK004L / WK004R		STX04						
VF V TWIN MAGNA	250	1997					H026FLD	H026FL				
VT F	250	1988										
VTR	250	1989-1990										
VTR	250	1998									H022RID	H022RI
XELVIS V-25	250	1997							H023FID	H023FI	H022RID	H022RI
XL R	250	1984-1992								H013FI		
XL S	250	1988-1991							H009FID	H009FI		H003RI
CBR R ABS	300	2014		WK123R							WF7522	
CB	350	1987							WF7102	H003FI		
XL R	350	1984-1991								H013FI		
XL X	350	1989								H013FI		
CB	400	1981-1985										
CB	400	1989-1991									H022RID	H022RI
CB FOUR	400	1981-1983										
CB FOUR	400	1997		WK016L / WK016R		STX16						
CB N	400	1982-1985		WK004L / WK004R		STX04					H022RID	H022RI
CB N	400	1986-1988		WK004L / WK004R		STX04					H022RID	H022RI
CBR F	400	1985-1987		WK004L / WK004R		STX04						H015RI
CBR F2	400	1985-1987		WK004L / WK004R		STX04						H015RI
CBR R	400	1987-1988										
CBR RR	400	1988-1990										
NSR	400	1985-1988							H021FID	H021FI		H015RI
NTV BROS	400	1988-1995										
RVF RR	400	1990										
VF F INTEGRA	400	1982-1986										
VFR R	400	1986							H021FID	H021FI		H015RI
VFR R	400	1987-1988							H022FID	H022FI		H015RI
VFR R	400	1989-1990		WK004L / WK004R		STX04						
VFR R	400	1991-1993		WK004L / WK004R		STX04						
VFR Z	400	1986-1987							H022FID	H022FI		
CB S	450	1985-1989							WF7102	H003FI		
CM	450	1982-1985										
CMX	450	1986-1988										
CB	500	1993-1996							H023FID	H023FI		
CB	500	1997-2003							H023FID	H023FI	H005RID	H005RI
CB EC	500	1983-1984										
CB F	500	2013-2014							WF7105		WF7523	
CB S	500	1998-2002									H005RID	H005RI
CB X	500	2013-2014							WF7105		WF7523	
CBF	500	2004-2008							H023FID	H023FI	H055RID	RF7531

STRADA / ONROAD

PASTIGLIE / PADS						LEVE / LEVERS	KIT MAGGIORAZIONE OVERSIZE KIT			
ANTERIORE FRONT				POSTERIORE REAR		ANTERIORE FRONT	ANTERIORE FRONT			
P1R	CM66	CM55	SM1	CM56	SM1	LE*	OKI	MODELLO / MODEL	CC	ANNO / YEAR
		716CM55	716SM1					CB	250	1991-2006
		756CM55	756SM1	711CM56	711SM1			CB F HORNET	250	1996-2001
			673SM1					CB REBEL	250	1986-1988
			725SM1					CBF (Rear Drum Model)	250	2004-2008
		704CM55	704SM1					CBR F	250	1986-1987
		704CM55	704SM1	711CM56	711SM1			CBR HURRICANE	250	1987-1988
		716CM55	716SM1	956CM56				CBR R	250	2011-2013
		910CM55	910SM1	956CM56				CBR R ABS	250	2011-2013
		716CM55	716SM1	711CM56	711SM1			CBR RJ	250	1988-1990
			673SM1					CBX (Rear Drum Model)	250	1984-1998
			654SM1					CBX RSE (Rear Drum Model)	250	1984-1986
								CMX C REBEL (Grimeca calip. - Rear Drum)	250	1997-2000
			795SM1					CMX C REBEL (Nissin caliper - Rear Drum)	250	1996
			700SM1					CRM R	250	1989-1990
			700SM1		701SM1			CRM R	250	1991-1993
			667SM1		667SM1			FTR	250	1986-1988
			654SM1					GB CLUBMAN	250	1988
			654SM1		654SM1			NS R	250	1985-1986
		704CM55	704SM1		654SM1			NSR R	250	1987
				711CM56	711SM1			NSR R	250	1988-1989
			700SM1					NX	250	1989
		756CM55	756SM1					RS GP	250	1990-1992
	688CM66	688CM55	688SM1					RS GP	250	1993-1997
		756CM55	756SM1					RS R	250	1990-1992
	688CM66	688CM55	688SM1					RS R	250	1993-1997
	688CM66	688CM55	688SM1					TSR	250	1999
		716CM55	716SM1					VF V TWIN MAGNA	250	1997
		704CM55	704SM1					VT F	250	1988
		704CM55	704SM1					VTR	250	1989-1990
		716CM55	716SM1	711CM56	711SM1			VTR	250	1998
		716CM55	716SM1	711CM56	711SM1			XELVIS V-25	250	1997
			667SM1					XL R	250	1984-1992
			700SM1		701SM1			XL S	250	1988-1991
		716CM55	716SM1	956CM56				CBR R ABS	300	2014
		704CM55						CB	350	1987
			667SM1					XL R	350	1984-1991
			667SM1					XL X	350	1989
					654SM1			CB	400	1981-1985
		716CM55		711CM56	711SM1			CB	400	1989-1991
			654SM1		654SM1			CB FOUR	400	1981-1983
		716CM55		742CM56	742SM1			CB FOUR	400	1997
			654SM1					CB N	400	1982-1985
		704CM55						CB N	400	1986-1988
			654SM1		654SM1			CBR F	400	1985-1987
			654SM1		654SM1			CBR F2	400	1985-1987
		704CM55			654SM1			CBR R	400	1987-1988
		716CM55			667SM1			CBR RR	400	1988-1990
			654SM1		654SM1			NSR	400	1985-1988
		756CM55		711CM56	711SM1			NTV BROS	400	1988-1995
		756CM55						RVF RR	400	1990
			654SM1		654SM1			VF F INTEGRA	400	1982-1986
		704CM55			654SM1			VFR R	400	1986
		704CM55		711CM56	711SM1			VFR R	400	1987-1988
		704CM55						VFR R	400	1989-1990
		756CM55		711CM56	711SM1			VFR R	400	1991-1993
		704CM55			654SM1			VFR Z	400	1986-1987
		704CM55						CB S	450	1985-1989
			654SM1					CM	450	1982-1985
			654SM1					CMX	450	1986-1988
		716CM55						CB	500	1993-1996
		780CM55		773CM56	773SM1			CB	500	1997-2003
			654SM1		654SM1			CB EC	500	1983-1984
		720CM55	720SM1	956CM56				CB F	500	2013-2014
								CB S	500	1998-2002
		720CM55	720SM1	956CM56				CB X	500	2013-2014
		720CM55	720SM1	742CM56	742SM1			CBF	500	2004-2008

* articolo in esaurimento / to be discontinued

STRADA / ONROAD

			DISCHI / DISKS									
			ANTERIORE / FRONT								POSTERIORE / REAR	
MODELLO / MODEL	CC	ANNO / YEAR	BATFLY STRADA	SK2	BATFLY ENDURO	R-STX	W-FLO	R-FLO	W-FIX	R-FIX	W-FIX	R-FIX
CBF ABS	500	2004-2007										
CBR R	500	2013-2014							WF7105		WF7523	
CX E	500	1982-1986										
CX TURBO	500	1981-1983										
FT	500	1982-1983										
NS R	500	1985-1987										
VF F	500	1984-1987							H021FID	H021FI	H021FID	H021FI
VT C	500	1982-1984										
VT C	500	1985-1986										
XBR S	500	1985-1989								H004FI		
CB	550	1983-1985										
CBX F	550	1982-1984										
CB F HORNET	600	1998-1999		WK016L / WK016R		STX16					H022RID	H022RI
CB F HORNET	600	2000-2002		WK043L / WK043R		STX43					H022RID	H022RI
CB F HORNET	600	2003-2006		WK043L / WK043R		STX43					H022RID	H022RI
CB F HORNET	600	2007-2013		WK096L / WK096R		STX96					H055RID	RF7531
CB F HORNET ABS	600	2007-2013		WK096L / WK096R		STX96					H055RID	RF7531
CB F HORNET S	600	2000-2004		WK043L / WK043R		STX43					H022RID	H022RI
CBF	600	2004-2007							H023FID	H023FI	H055RID	RF7531
CBF N	600	2003-2007							H023FID	H023FI	H055RID	RF7531
CBF S	600	2008-2011										
CBF S ABS	600	2003-2007							H023FID	H023FI	H055RID	RF7531
CBF S ABS	600	2008-2011										
CBR F	600	1987-1988							H022FID	H022FI		H015RI
CBR F	600	1989-1990							H022FID	H022FI		H015RI
CBR F	600	1991-1994							H022FID	H022FI	H022RID	H022RI
CBR F	600	1995-1998		WK004L / WK004R		STX04					H022RID	H022RI
CBR F	600	1999-2000		WK005L / WK005R		STX05					H022RID	H022RI
CBR F	600	2001-2007		WK040L / WK040R		STX40					H022RID	H022RI
CBR F	600	2011-2013		WK096L / WK096R		STX96					H055RID	RF7531
CBR F ABS	600	2011-2013		WK096L / WK096R		STX96					H055RID	RF7531
CBR F SPORT	600	2001-2002		WK040L / WK040R		STX40					H022RID	H022RI
CBR RR	600	2003-2004	BY747L / BY747R	WK047L / WK047R		STX47					H022RID	H022RI
CBR RR	600	2005-2006	BY747L / BY747R	WK047L / WK047R		STX47					H022RID	H022RI
CBR RR	600	2007-2013	BY747L / BY747R	WK047L / WK047R		STX47					H022RID	H022RI
CBR RR	600	2014	BY747L / BY747R	WK047L / WK047R		STX47					H022RID	H022RI
CBR RR - ABS	600	2009-2012	BY747L / BY747R	WK047L / WK047R		STX47					H022RID	H022RI
CBR RR - ABS	600	2013-2014	BY747L / BY747R	WK047L / WK047R		STX47					H022RID	H022RI
NTV BROS HAWK	600	1988-1990										
STEED	600	1988-1990										
XL LM	600	1985-1988										
XL R	600	1983-1987							H009FID	H009FI		
XL RM	600	1985-1988										
XL V TRANSALP	600	1991-1993								H004FI	H005RID	H005RI
XL V TRANSALP	600	1994-1996								H004FI	H005RID	H005RI
XL V TRANSALP	600	1997-1999							WF7102	H003FI	H005RID	H005RI
XL V TRANSALP (Rear Drum Model)	600	1987-1990								H004FI		
CB F	650	2014										
CB NIGHTHAWK	650	1982-1983										
CBR F	650	2014										
CBX	650	1983-1984										
CX E	650	1983-1985										
CX TURBO	650	1983-1985										
FMX	650	2005-2008										H003RI
FX VIGOR	650	1999-2003							H022FID	H022FI		H003RI
GL	650	1983-1985										
NT HAWK GT	650	1988-1990					H026FLD	H026FL				
NTV BROS	650	1988-1990										
NTV DEAUVILLE	650	1998-2001							H023FID	H023FI		H031RI
NTV DEAUVILLE	650	2002-2005							H023FID	H023FI		H031RI
NTV REVERE	650	1988-1993					H026FLD	H026FL				
NTV REVERE	650	1994-1998					H026FLD	H026FL				
NX DOMINATOR	650	1988-1992							WF7102	H003FI	H022RID	H022RI
NX DOMINATOR	650	1993-1996							WF7102	H003FI		H003RI
NX DOMINATOR	650	1997-2004							WF7102	H003FI		H003RI
NX DOMINATOR 34 HP	650	1997-2002							WF7102	H003FI		H003RI

STRADA / ONROAD

	PASTIGLIE / PADS						LEVE / LEVERS	KIT MAGGIORAZIONE OVERSIZE KIT			
	ANTERIORE FRONT				POSTERIORE REAR		ANTERIORE FRONT	ANTERIORE FRONT			
MODELLO / MODEL	P1R	CM66	CM55	SM1	CM56	SM1	LE*	OKI	MODELLO / MODEL	CC	ANNO / YEAR
CBF ABS			910CM55		742CM56	742SM1			CBF ABS	500	2004-2007
CBR R			720CM55	720SM1	956CM56				CBR R	500	2013-2014
CX E				654SM1		654SM1			CX E	500	1982-1986
CX TURBO				654SM1		654SM1			CX TURBO	500	1981-1983
FT				654SM1		654SM1			FT	500	1982-1983
NS R				654SM1		654SM1			NS R	500	1985-1987
VF F				654SM1		654SM1			VF F	500	1984-1987
VT C				654SM1					VT C	500	1982-1984
VT C				654SM1		654SM1			VT C	500	1985-1986
XBR S				654SM1					XBR S	500	1985-1989
CB				654SM1					CB	550	1983-1985
CBX F				654SM1		654SM1			CBX F	550	1982-1984
CB F HORNET			716CM55		742CM56	742SM1			CB F HORNET	600	1998-1999
CB F HORNET			716CM55		742CM56	742SM1			CB F HORNET	600	2000-2002
CB F HORNET			716CM55		742CM56	742SM1	LE1016* / LE1022* / LE2016* / LE2022*		CB F HORNET	600	2003-2006
CB F HORNET			716CM55		925CM56	925SM1			CB F HORNET	600	2007-2013
CB F HORNET ABS			910CM55		742CM56	742SM1			CB F HORNET ABS	600	2007-2013
CB F HORNET S			716CM55		742CM56	742SM1			CB F HORNET S	600	2000-2004
CBF			716CM55		742CM56	742SM1			CBF	600	2004-2007
CBF N			716CM55		742CM56	742SM1			CBF N	600	2003-2007
CBF S			716CM55		742CM56	742SM1			CBF S	600	2008-2011
CBF S ABS			716CM55		742CM56	742SM1			CBF S ABS	600	2003-2007
CBF S ABS			910CM55		742CM56	742SM1			CBF S ABS	600	2008-2011
CBR F			704CM55			654SM1	LE1016* / LE1022* / LE2016* / LE2022*		CBR F	600	1987-1988
CBR F			704CM55		711CM56	711SM1	LE1016* / LE1022* / LE2016* / LE2022*		CBR F	600	1989-1990
CBR F			704CM55		742CM56	742SM1	LE1016* / LE1022* / LE2016* / LE2022*		CBR F	600	1991-1994
CBR F			716CM55		742CM56	742SM1	LE1016* / LE1022* / LE2016* / LE2022*		CBR F	600	1995-1998
CBR F		827CM66	827CM55		742CM56	742SM1	LE1016* / LE1022* / LE2016* / LE2022*		CBR F	600	1999-2000
CBR F		827CM66	827CM55		742CM56	742SM1	LE1016* / LE1022* / LE2016* / LE2022*		CBR F	600	2001-2007
CBR F			716CM55		925CM56	925SM1			CBR F	600	2011-2013
CBR F ABS			910CM55		742CM56	742SM1 925SM1			CBR F ABS	600	2011-2013
CBR F SPORT		827CM66	827CM55		742CM56	742SM1			CBR F SPORT	600	2001-2002
CBR RR		827CM66	827CM55		742CM56	742SM1			CBR RR	600	2003-2004
CBR RR	P1R899	899CM66	899CM55		742CM56	742SM1		OKWK08	CBR RR	600	2005-2006
CBR RR	P1R899	899CM66	899CM55		925CM56	925SM1	LE1002* / LE1009* / LE2002* / LE2009*	OKWK08	CBR RR	600	2007-2013
CBR RR	P1R899	899CM66	899CM55		925CM56	925SM1		OKWK08	CBR RR	600	2014
CBR RR - ABS	P1R899	899CM66	899CM55		925CM56	925SM1	LE1002* / LE1009* / LE2002* / LE2009*	OKWK08	CBR RR - ABS	600	2009-2012
CBR RR - ABS	P1R899	899CM66	899CM55		925CM56	925SM1		OKWK08	CBR RR - ABS	600	2013-2014
NTV BROS HAWK			756CM55		711CM56	711SM1			NTV BROS HAWK	600	1988-1990
STEED				690SM1					STEED	600	1988-1990
XL LM				654SM1					XL LM	600	1985-1988
XL R				667SM1					XL R	600	1983-1987
XL RM				654SM1					XL RM	600	1985-1988
XL V TRANSALP				690SM1	711CM56	711SM1			XL V TRANSALP	600	1991-1993
XL V TRANSALP			716CM55		711CM56	711SM1			XL V TRANSALP	600	1994-1996
XL V TRANSALP				772SM1	711CM56	711SM1			XL V TRANSALP	600	1997-1999
XL V TRANSALP (Rear Drum Model)				654SM1					XL V TRANSALP (Rear Drum Model)	600	1987-1990
CB F			720CM55		956CM56				CB F	650	2014
CB NIGHTHAWK				654SM1					CB NIGHTHAWK	650	1982-1983
CBR F			720CM55		956CM56				CBR F	650	2014
CBX				654SM1					CBX	650	1983-1984
CX E				654SM1		654SM1			CX E	650	1983-1985
CX TURBO				654SM1		654SM1			CX TURBO	650	1983-1985
FMX			716CM55		742CM56	742SM1			FMX	650	2005-2008
FX VIGOR			780CM55		773CM56	773SM1			FX VIGOR	650	1999-2003
GL				654SM1					GL	650	1983-1985
NT HAWK GT			716CM55			701SM1			NT HAWK GT	650	1988-1990
NTV BROS			716CM55			701SM1			NTV BROS	650	1988-1990
NTV DEAUVILLE			780CM55		711CM56	711SM1			NTV DEAUVILLE	650	1998-2001
NTV DEAUVILLE		813CM66	813CM55		813CM56	813SM1			NTV DEAUVILLE	650	2002-2005
NTV REVERE			716CM55		711CM56	711SM1			NTV REVERE	650	1988-1993
NTV REVERE			716CM55		748CM56	748SM1			NTV REVERE	650	1994-1998
NX DOMINATOR				690SM1	711CM56	711SM1			NX DOMINATOR	650	1988-1992
NX DOMINATOR				690SM1	711CM56	711SM1			NX DOMINATOR	650	1993-1996
NX DOMINATOR			780CM55		773CM56	773SM1			NX DOMINATOR	650	1997-2004
NX DOMINATOR 34 HP			780CM55		773CM56	773SM1			NX DOMINATOR 34 HP	650	1997-2002

* articolo in esaurimento / to be discontinued

STRADA / ONROAD

			DISCHI / DISKS									
			ANTERIORE / FRONT								POSTERIORE / REAR	
MODELLO / MODEL	CC	ANNO / YEAR	BATFLY STRADA	SK2	BATFLY ENDURO	R-STX	W-FLO	R-FLO	W-FIX	R-FIX	W-FIX	R-FIX
SLR	650	1996-1999								H004FI		H003RI
XL V TRANSALP	650	2000-2007							WF7102	H003FI	H005RID	H005RI
XRV AFRICA TWIN	650	1988-1989								H005FI	H005RID	H005RI
DN-01	680	2008-2012										
NTV DEAUVILLE	680	2006-2012							H023FID	H023FI		H031RI
CTX DCT ABS	700	2014										
CTX N DCT ABS	700	2014										
NC S	700	2012-2013							WF7106	RF7113	WF7524	RF7546
NC S ABS	700	2012-2013							WF7106	RF7113	WF7524	RF7546
NC X	700	2012-2013							WF7106	RF7113	WF7524	RF7546
NC X ABS	700	2012-2013							WF7106	RF7113	WF7524	RF7546
XL V TRANSALP	700	2008-2011							WF7102	H003FI	H005RID	H005RI
XL V TRANSALP ABS	700	2008-2011							WF7102	H003FI	H005RID	H005RI
CB	750	1982-1984										
CB C	750	1980-1981										
CB C	750	1982-1984										
CB F	750	1980										
CB F	750	1981-1986										
CB F	750	1992-1995							H023FID	H023FI	H005RID	H005RI
CB F2	750	1981-1986										
CB K	750	1981-1986							H023FID	H023FI		
CB N	750	1992-1995							H023FID	H023FI	H005RID	H005RI
CB Seven Fifty	750	1992-1995							H023FID	H023FI	H005RID	H005RI
CBR HURRICANE	750	1987-1989										
CBX F	750	1983-1988							H022FID	H022FI		H031RI
NC S DCT	750	2014							WF7106	RF7113	WF7524	RF7546
NC X	750	2014							WF7106	RF7113	WF7524	RF7546
NC X DCT	750	2014							WF7106	RF7113	WF7524	RF7546
RVF RC45	750	1994-1997										
VF C	750	1982-1985										
VF C MAGNA	750	1988-1992										
VF C MAGNA	750	1994-2003					H026FLD	H026FL				
VF F	750	1983-1987										
VF SHADOW	750	1994-2007					H026FLD	H026FL				
VF SPORT	750	1982-1984										
VFR F	750	1986-1987							H022FID	H022FI	H021FID	H021FI
VFR F	750	1988-1989							H023FID	H023FI	H021FID	H021FI
VFR F	750	1990-1993							H023FID	H023FI	H023RID	H023RI
VFR F	750	1994-1997		WK004L / WK004R		STX04					H023RID	H023RI
VFR R	750	1988-1991				STX17						
VP CUSTOM-CH	750	1987-1988										
XLV R	750	1983-1987							H022FID	H022FI		
XRV AFRICA TWIN	750	1990-1992							H018FID	H018FI	WF4504	H018RI
XRV AFRICA TWIN	750	1993-2002							H018FID	H018FI	WF4504	H018RI
CROSSRUNNER	800	2011-2013		WK005L / WK005R		STX05					H023RID	H023RI
CROSSRUNNER	800	2014		WK005L / WK005R		STX05					H023RID	H023RI
PACIFIC COAST	800	1989-1992								H031RI		
VFR F	800	2014										
VFR V-TEC	800	1998-2005		WK005L / WK005R		STX05					H023RID	H023RI
VFR V-TEC	800	2006-2010		WK005L / WK005R		STX05					H023RID	H023RI
CB	900	1981-1985										
CB F HORNET	900	2002		WK040L / WK040R		STX40					H005RID	H005RI
CB F HORNET	900	2003-2006		WK040L / WK040R		STX40					H005RID	H005RI
CB F HORNET	900	2007-2008										
CBR F	900	2003		WK005L / WK005R		STX05						
CBR RR	900	1992		WK005L / WK005R		STX05					H022RID	H022RI
CBR RR	900	1993		WK005L / WK005R		STX05					H022RID	H022RI
CBR RR	900	1994-1997		WK004L / WK004R		STX04					H022RID	H022RI
CBR RR	900	1998-1999		WK030L / WK030R		STX30					H022RID	H022RI
CBR RR	929	2000-2001		WK036L / WK036R		STX36					H022RID	H022RI
CBR RR	954	2002-2003		WK036L / WK036R		STX36					H022RID	H022RI
CB	1000	1983-1985										
CB	1000	1993				STX17						
CB 1000 R	1000	2008-2009		WK047L / WK047R		STX47					WF7502	RF7532
CB 1000 R	1000	2010-2013		WK047L / WK047R		STX47					WF7502	RF7532
CB 1000 R - ABS	1000	2009-2014		WK047L / WK047R		STX47					WF7502	RF7532

STRADA / ONROAD

PASTIGLIE / PADS						LEVE / LEVERS	KIT MAGGIORAZIONE OVERSIZE KIT			
ANTERIORE FRONT				POSTERIORE REAR		ANTERIORE FRONT	ANTERIORE FRONT			
P1R	CM66	CM55	SM1	CM56	SM1	LE*	OKI	MODELLO / MODEL	CC	ANNO / YEAR
		780CM55		773CM56	773SM1			SLR	650	1996-1999
			772SM1	711CM56	711SM1			XL V TRANSALP	650	2000-2007
			690SM1	711CM56	711SM1			XRV AFRICA TWIN	650	1988-1989
		910CM55		720CM56	720SM1			DN-01	680	2008-2012
		910CM55		813CM56	813SM1			NTV DEAUVILLE	680	2006-2012
		720CM55		956CM56				CTX DCT ABS	700	2014
		720CM55		956CM56				CTX N DCT ABS	700	2014
		716CM55		711CM56	711SM1	LE1016* / LE1022* / LE2016* / LE2022*		NC S	700	2012-2013
		910CM55		742CM56	742SM1	LE1016* / LE1022* / LE2016* / LE2022*		NC S ABS	700	2012-2013
		716CM55		711CM56	711SM1	LE1016* / LE1022* / LE2016* / LE2022*		NC X	700	2012-2013
		910CM55		742CM56	742SM1	LE1016* / LE1022* / LE2016* / LE2022*		NC X ABS	700	2012-2013
			772SM1	711CM56	711SM1			XL V TRANSALP	700	2008-2011
		910CM55		711CM56	711SM1			XL V TRANSALP ABS	700	2008-2011
			645SM1					CB	750	1982-1984
			645SM1					CB C	750	1980-1981
			654SM1					CB C	750	1982-1984
			654SM1					CB F	750	1980
			654SM1		654SM1			CB F	750	1981-1986
		716CM55		742CM56	742SM1			CB F	750	1992-1995
			654SM1		654SM1			CB F2	750	1981-1986
			654SM1		654SM1			CB K	750	1981-1986
		716CM55		742CM56	742SM1			CB N	750	1992-1995
		716CM55		742CM56	742SM1			CB Seven Fifty	750	1992-1995
			690SM1		654SM1			CBR HURRICANE	750	1987-1989
			654SM1		654SM1			CBX F	750	1983-1988
		720CM55		742CM56	742SM1	LE1016* / LE1022* / LE2016* / LE2022*		NC S DCT	750	2014
		720CM55		742CM56	742SM1	LE1016* / LE1022* / LE2016* / LE2022*		NC X	750	2014
		720CM55		742CM56	742SM1	LE1016* / LE1022* / LE2016* / LE2022*		NC X DCT	750	2014
		756CM55						RVF RC45	750	1994-1997
			654SM1					VF C	750	1982-1985
			654SM1					VF C MAGNA	750	1988-1992
								VF C MAGNA	750	1994-2003
			654SM1					VF F	750	1983-1987
		716CM55						VF SHADOW	750	1994-2007
			654SM1					VF SPORT	750	1982-1984
			690SM1		654SM1			VFR F	750	1986-1987
		716CM55		720CM56	720SM1			VFR F	750	1988-1989
		716CM55		720CM56	720SM1			VFR F	750	1990-1993
		716CM55		720CM56	720SM1			VFR F	750	1994-1997
		756CM55						VFR R	750	1988-1991
			654SM1					VP CUSTOM-CH	750	1987-1988
			654SM1					XLV R	750	1983-1987
		704CM55		711CM56	711SM1			XRV AFRICA TWIN	750	1990-1992
			772SM1	711CM56	711SM1			XRV AFRICA TWIN	750	1993-2002
		910CM55		942CM56	942SM1	LE1003* / LE1022* / LE2003* / LE2022*		CROSSRUNNER	800	2011-2013
		910CM55		942CM56	942SM1			CROSSRUNNER	800	2014
		716CM55						PACIFIC COAST	800	1989-1992
P1R899	899CM66	899CM55		942CM56	942SM1			VFR F	800	2014
	813CM66	813CM55		813CM56	813SM1			VFR V-TEC	800	1998-2005
		910CM55		813CM56	813SM1			VFR V-TEC	800	2006-2010
			654SM1		654SM1			CB	900	1981-1985
		756CM55		742CM56	742SM1			CB F HORNET	900	2002
		756CM55		742CM56	742SM1	LE1016* / LE1022* / LE2016* / LE2022*		CB F HORNET	900	2003-2006
						LE1016* / LE1022* / LE2016* / LE2022*		CB F HORNET	900	2007-2008
								CBR F	900	2003
		756CM55		742CM56	742SM1			CBR RR	900	1992
		756CM55		742CM56	742SM1	LE1016* / LE1022* / LE2016* / LE2022*		CBR RR	900	1993
		756CM55		742CM56	742SM1	LE1016* / LE1022* / LE2016* / LE2022*		CBR RR	900	1994-1997
	827CM66	827CM55		742CM56	742SM1	LE1016* / LE1022* / LE2016* / LE2022*		CBR RR	900	1998-1999
	827CM66	827CM55		742CM56	742SM1			CBR RR	929	2000-2001
	827CM66	827CM55		742CM56	742SM1			CBR RR	954	2002-2003
			654SM1		654SM1			CB	1000	1983-1985
								CB	1000	1993
P1R899	899CM66	899CM55		942CM56	942SM1	LE1003* / LE1009* / LE2003* / LE2009*	OKWK08	CB 1000 R	1000	2008-2009
P1R899	899CM66	899CM55		942CM56	942SM1		OKWK08	CB 1000 R	1000	2010-2013
		910CM55		942CM56	942SM1			CB 1000 R - ABS	1000	2009-2014

* articolo in esaurimento / to be discontinued

STRADA / ONROAD

			DISCHI / DISKS									
			ANTERIORE / FRONT								POSTERIORE / REAR	
MODELLO / MODEL	CC	ANNO / YEAR	BATFLY STRADA	SK2	BATFLY ENDURO	R-STX	W-FLO	R-FLO	W-FIX	R-FIX	W-FIX	R-FIX
CB F Big one	1000	1993-1995										H031RI
CBF	1000	2006-2011									H055RID	RF7531
CBF ABS	1000	2006-2012									H055RID	RF7531
CBF ST ABS	1000	2006-2012									H055RID	RF7531
CBR F	1000	1987-1988							H023FID	H023FI		H031RI
CBR F	1000	1989-1992							H023FID	H023FI		H031RI
CBR F	1000	1993-1997							H023FID	H023FI	H021FID	H021FI
CBR RR	1000	2004-2005	BY747L / BY747R	WK047L / WK047R		STX47					H022RID	H022RI
CBR RR	1000	2006-2007		WK041L / WK041R		STX41					H022RID	H022RI
CBR RR	1000	2008-2011	BY798L / BY798R	WK098L / WK098R		STX98					H022RID	H022RI
CBR RR	1000	2012-2014	BY798L / BY798R	WK098L / WK098R		STX98					H022RID	H022RI
CBR RR - ABS	1000	2009-2014	BY798L / BY798R	WK098L / WK098R		STX98					H022RID	H022RI
CBR RR SP	1000	2014										
CBX	1000	1981-1983										
VF F	1000	1984-1988							H022FID	H022FI		
VF R	1000	1986-1987										
VT C	1000	1987-1988										
VTR F FIRESTORM	1000	1997-2007		WK004L / WK004R		STX04					H022RID	H022RI
VTR F SUPER HAWK	1000	1997-2007		WK004L / WK004R		STX04					H022RID	H022RI
VTR SP1 RC51	1000	2000-2001		WK041L / WK041R		STX41					H022RID	H022RI
VTR SP2 RC51	1000	2002-2004		WK041L / WK041R		STX41					H022RID	H022RI
XLV VARADERO	1000	1999-2002		WK005L / WK005R		STX05					WF4504	H018RI
XLV VARADERO	1000	2003-2007		WK005L / WK005R		STX05					H051RID	RF7533
XLV VARADERO	1000	2008-2011		WK005L / WK005R		STX05					H051RID	RF7533
XLV VARADERO ABS	1000	2004-2011									H051RID	RF7533
CB	1100	2013										
CB ABS	1100	2014										
CB EX ABS	1100	2014										
CB R	1100	1981-1986										
CBR XX	1100	1997-1998									H051RID	RF7533
CBR XX	1100	1999-2007		WK038L / WK038R		STX38					H051RID	RF7533
GL GOLD WING	1100	1982-1983								H033FI		H033FI
ST PAN EUROPEAN	1100	1990							H023FID	H023FI		H033RI
ST PAN EUROPEAN	1100	1991-1995										H033RI
ST PAN EUROPEAN	1100	1996					H026FLD	H026FL				H033RI
ST PAN EUROPEAN	1100	1997-2001					H026FLD	H026FL				
ST PAN EUROPEAN ABS-CBS-TCS	1100	1996							H023FID	H023FI		H033RI
ST PAN EUROPEAN ABS-CBS-TCS	1100	1997-2001							H023FID	H023FI		
VF C	1100	1983-1985										
X ELEVEN	1100	2000-2003		WK038L / WK038R		STX38					H021FID / H051RID	H021FI / RF7533
CROSSTOURER	1200	2012-2013					WH7005L / WH7005R	RH7006			WF7513	RF7534
GL	1200	1984-1988										
GL DX	1200	1983-1987										
GL GOLD WING	1200	1984-1987										
VFR F	1200	2010-2014		WK113L / WK113R		STX113					WF7513	RF7534
VFR F DCT	1200	2010-2014		WK113L / WK113R		STX113					WF7513	RF7534
CB	1284	1998-2000										H031RI
CB	1284	2001-2002		WK038L / WK038R		STX38						H031RI
CB	1284	2003-2008		WK047L / WK047R		STX47					H051RID	RF7533
CB X4	1284	1997										H031RI
CTX ABS	1300	2014										
ST PAN EUROPEAN	1300	2002-2007										
ST PAN EUROPEAN	1300	2008-2009										
ST PAN EUROPEAN ABS	1300	2002-2007										
ST PAN EUROPEAN ABS	1300	2008-2009										
GL F6C VALKYRIE	1500	1997		WK005L / WK005R		STX05						H033RI
GL F6C VALKYRIE	1500	1998-2003		WK005L / WK005R		STX05						
GL GOLD WING	1500	1988-2000								H033FI		
GLX SE	1500	1990-1998								H033FI		H033RI
GLX SE	1500	1999-2000								H033FI		
GL GOLD WING	1800	2001-2014		WK005L / WK005R		STX05						
VTX	1800	2001-2007										
HUSQVARNA												
TR 650 STRADA	650	2013-2014					WL101L	RL7006			BW05RID	BW05RI
TR 650 TERRA	650	2013-2014					WL101L	RL7006			BW05RID	BW05RI

STRADA / ONROAD

PASTIGLIE / PADS						LEVE / LEVERS	KIT MAGGIORAZIONE OVERSIZE KIT			
ANTERIORE FRONT				POSTERIORE REAR		ANTERIORE FRONT	ANTERIORE FRONT			
P1R	CM66	CM55	SM1	CM56	SM1	LE*	OKI	MODELLO / MODEL	CC	ANNO / YEAR
		756CM55		742CM56	742SM1			CB F Big one	1000	1993-1995
		716CM55		742CM56	742SM1			CBF	1000	2006-2011
		910CM55			910SM1			CBF ABS	1000	2006-2012
		910CM55			910SM1			CBF ST ABS	1000	2006-2012
			690SM1		654SM1			CBR F	1000	1987-1988
		716CM55		720CM56	720SM1			CBR F	1000	1989-1992
								CBR F	1000	1993-1997
P1R899	899CM66	899CM55		742CM56	742SM1	LE1003* / LE1009* / LE2003* / LE2009*	0KWK08	CBR RR	1000	2004-2005
P1R899	899CM66	899CM55		925CM56	925SM1	LE1003* / LE1009* / LE2003* / LE2009*	0KWK08	CBR RR	1000	2006-2007
P1R899	899CM66	899CM55		925CM56	925SM1	LE1002* / LE1009* / LE2002* / LE2009*		CBR RR	1000	2008-2011
P1R899	899CM66	899CM55		925CM56	925SM1			CBR RR	1000	2012-2014
P1R899	899CM66	899CM55		925CM56	925SM1			CBR RR - ABS	1000	2009-2014
P1R930	930CM66	930CM55		925CM56	925SM1			CBR RR SP	1000	2014
			654SM1		654SM1			CBX	1000	1981-1983
			654SM1		654SM1			VF F	1000	1984-1988
			654SM1		654SM1			VF R	1000	1986-1987
			654SM1		654SM1			VT C	1000	1987-1988
		756CM55		742CM56	742SM1			VTR F FIRESTORM	1000	1997-2007
		756CM55		742CM56	742SM1			VTR F SUPER HAWK	1000	1997-2007
	827CM66	827CM55		742CM56	742SM1			VTR SP1 RC51	1000	2000-2001
	827CM66	827CM55		742CM56	742SM1			VTR SP2 RC51	1000	2002-2004
	813CM66	813CM55		813CM56	813SM1			XLV VARADERO	1000	1999-2002
	813CM66	813CM55		813CM56	813SM1			XLV VARADERO	1000	2003-2007
		910CM55		813CM56	813SM1			XLV VARADERO	1000	2008-2011
		910CM55		813CM56	813SM1			XLV VARADERO ABS	1000	2004-2011
		910CM55		742CM56	742SM1			CB	1100	2013
	827CM66	827CM55		742CM56	742SM1			CB ABS	1100	2014
	827CM66	827CM55		742CM56	742SM1			CB EX ABS	1100	2014
			654SM1		654SM1			CB R	1100	1981-1986
	813CM66	813CM55		813CM56	813SM1			CBR XX	1100	1997-1998
	813CM66	813CM55		813CM56	813SM1			CBR XX	1100	1999-2007
			654SM1		654SM1			GL GOLD WING	1100	1982-1983
		716CM55		720CM56	720SM1			ST PAN EUROPEAN	1100	1990
		716CM55		748CM56	748SM1			ST PAN EUROPEAN	1100	1991-1995
		716CM55			716SM1			ST PAN EUROPEAN	1100	1996
		716CM55			716SM1			ST PAN EUROPEAN	1100	1997-2001
	813CM66	813CM55			653SM1			ST PAN EUROPEAN ABS-CBS-TCS	1100	1996
	813CM66	813CM55			653SM1			ST PAN EUROPEAN ABS-CBS-TCS	1100	1997-2001
			654SM1		654SM1			VF C	1100	1983-1985
	813CM66	813CM55		813CM56	813SM1			X ELEVEN	1100	2000-2003
		910CM55		957CM56				CROSSTOURER	1200	2012-2013
			654SM1		654SM1			GL	1200	1984-1988
			654SM1		654SM1			GL DX	1200	1983-1987
			654SM1		654SM1			GL GOLD WING	1200	1984-1987
		950CM55		942CM56	942SM1			VFR F	1200	2010-2014
		950CM55		957CM56				VFR F DCT	1200	2010-2014
		801CM55	801SM1	875CM56	875SM1			CB	1284	1998-2000
	827CM66	827CM55		875CM56	875SM1			CB	1284	2001-2002
	827CM66	827CM55		742CM56	742SM1			CB	1284	2003-2008
		756CM55						CB X4	1284	1997
		910CM55		720CM56				CTX ABS	1300	2014
	813CM66	813CM55		813CM56	813SM1			ST PAN EUROPEAN	1300	2002-2007
		910CM55		813CM56	813SM1			ST PAN EUROPEAN	1300	2008-2009
	813CM66	813CM55		813CM56	813SM1			ST PAN EUROPEAN ABS	1300	2002-2007
		910CM55		813CM56	813SM1			ST PAN EUROPEAN ABS	1300	2008-2009
		716CM55		720CM56	720SM1			GL F6C VALKYRIE	1500	1997
		716CM55		720CM56	720SM1			GL F6C VALKYRIE	1500	1998-2003
			690SM1		654SM1			GL GOLD WING	1500	1988-2000
			690SM1		654SM1			GLX SE	1500	1990-1998
			690SM1		654SM1			GLX SE	1500	1999-2000
	813CM66	813CM55		962CM56				GL GOLD WING	1800	2001-2014
	813CM66	813CM55						VTX	1800	2001-2007
								HUSQVARNA		
		780CM55		773CM56	773SM1			TR 650 STRADA	650	2013-2014
		780CM55		773CM56	773SM1			TR 650 TERRA	650	2013-2014

* articolo in esaurimento / to be discontinued

STRADA / ONROAD

			DISCHI / DISKS									
			ANTERIORE / FRONT								POSTERIORE / REAR	
MODELLO / MODEL	CC	ANNO / YEAR	BATFLY STRADA	SK2	BATFLY ENDURO	R-STX	W-FLO	R-FLO	W-FIX	R-FIX	W-FIX	R-FIX
HYOSUNG												
COMET GT	125	2004										
KARION RT	125	2002										
COMET GT	250	2002										
COMET GT	250	2003-2004										
COMET GT	650	2004										
KAWASAKI												
KMX	80	1987										
KH	100	1983-1986										
ELIMINATOR	125	1998-1999										
ELIMINATOR	125	2000-2007										
KMX	125	1986-1990										
KMX	125	1991-1998										
KMX	125	1999-2003										
KMX	200	1988-1989										
ELIMINATOR	250	1990-1998										
EX R NINJA	250	1986-1987										
EX R NINJA	250	1988-2007										
GPX R	250	1986-1987										
GPX R	250	1988-1989										
KLE	250	1983-1985										
KLR	250	1984-1991										
KLR	250	1995-2007										
KR	250	1985										
KR	250	1988-1989										
KR	250	1990-1992										
NINJA 250 R	250	2008-2012		WK103R							WF7503	
VN ELIMINATOR	250	1999										
ZXR R	250	1989										
ZZR	250	1990-1991										
ZZR	250	1992		WK008L / WK008R		STX08						
NINJA 300	300	2013-2014							WF7104			
NINJA 300 ABS	300	2013-2014							WF7104			
GPZ	305	1982-1984										
KLR	350	1985-1986										
ELIMINATOR	400	1988-1989								KW07FI		
EN VULCAN	400	1985-1986										
FX R	400	1986-1987										
GPX R	400	1987-1989										
GPZ	400	1986-1987										
GPZ R	400	1989										
ZR	400	1983-1984										
ZX	400	1984-1985										
ZX	400	1986-1987										
ZX	400	1988-1989								KW02FI		
ZXR	400	1989-1990		WK008L / WK008R		STX08						
ZXR	400	1991-2002		WK006L / WK006R		STX06					KW15RID	
ZZR	400	1990										
Z 450	450	1985-1986										
EN VULCAN	500	1990-1996										
ER5	500	1996-2000								KW07FI		
ER5	500	2001-2006								KW07FI		
EX R NINJA	500	1994-2008										
GPZ S	500	1987-1988								KW07FI		
GPZ S	500	1989-1992								KW02FI		
GPZ S	500	1993-2006								KW02FI		
KLE	500	1991-2007							KW13FID			KW16RI
KZR	500	1983-1985										
ZEPHYR	500	1991-1992										
ZZR	500	1990										
KZ F	550	1983-1984										
KZ F	550	1985-1986										
KZ GP	550	1984-1985										
KZN	550	1984-1985										
ZEPHYR	550	1993-2001		WK008L / WK008R		STX08					KW15RID	

STRADA / ONROAD

PASTIGLIE / PADS						LEVE / LEVERS	KIT MAGGIORAZIONE OVERSIZE KIT			
ANTERIORE FRONT				POSTERIORE REAR		ANTERIORE FRONT	ANTERIORE FRONT			
P1R	CM66	CM55	SM1	CM56	SM1	LE*	OKI	MODELLO / MODEL	CC	ANNO / YEAR
								HYOSUNG		
			673SM1		673SM1			COMET GT	125	2004
			673SM1					KARION RT	125	2002
			698SM1	719CM56	719SM1			COMET GT	250	2002
			673SM1		673SM1			COMET GT	250	2003-2004
			673SM1		673SM1			COMET GT	650	2004
								KAWASAKI		
			702SM1					KMX	80	1987
			669SM1					KH	100	1983-1986
			703SM1		669SM1			ELIMINATOR	125	1998-1999
			725SM1		669SM1			ELIMINATOR	125	2000-2007
			702SM1		669SM1			KMX	125	1986-1990
					669SM1			KMX	125	1991-1998
			702SM1		669SM1			KMX	125	1999-2003
			702SM1		669SM1			KMX	200	1988-1989
			662SM1					ELIMINATOR	250	1990-1998
			662SM1		662SM1			EX R NINJA	250	1986-1987
			698SM1		712SM1			EX R NINJA	250	1988-2007
			662SM1		662SM1			GPX R	250	1986-1987
			712SM1		712SM1			GPX R	250	1988-1989
			669SM1					KLE	250	1983-1985
			669SM1		669SM1			KLR	250	1984-1991
			772SM1		701SM1			KLR	250	1995-2007
			669SM1		662SM1			KR	250	1985
			712SM1					KR	250	1988-1989
		715CM55	715SM1		712SM1			KR	250	1990-1992
			725SM1		725SM1			NINJA 250 R	250	2008-2012
		782CM55	782SM1					VN ELIMINATOR	250	1999
			712SM1		712SM1			ZXR R	250	1989
			698SM1		669SM1			ZZR	250	1990-1991
			698SM1		669SM1			ZZR	250	1992
			725SM1		725SM1			NINJA 300	300	2013-2014
			725SM1		725SM1			NINJA 300 ABS	300	2013-2014
			662SM1					GPZ	305	1982-1984
			669SM1					KLR	350	1985-1986
			662SM1		662SM1			ELIMINATOR	400	1988-1989
			662SM1					EN VULCAN	400	1985-1986
			669SM1		662SM1			FX R	400	1986-1987
			712SM1	698CM56	698SM1			GPX R	400	1987-1989
			712SM1		712SM1			GPZ	400	1986-1987
			712SM1		712SM1			GPZ R	400	1989
			669SM1					ZR	400	1983-1984
			669SM1					ZX	400	1984-1985
			662SM1		662SM1			ZX	400	1986-1987
			712SM1	698CM56	698SM1			ZX	400	1988-1989
		715CM55		719CM56	719SM1			ZXR	400	1989-1990
				719CM56	719SM1			ZXR	400	1991-2002
				698CM56	698SM1			ZZR	400	1990
			662SM1					Z 450	450	1985-1986
			662SM1					EN VULCAN	500	1990-1996
			698SM1					ER5	500	1996-2000
		782CM55						ER5	500	2001-2006
			698SM1		669SM1			EX R NINJA	500	1994-2008
			698SM1					GPZ S	500	1987-1988
			669SM1		662SM1			GPZ S	500	1989-1992
			712SM1		669SM1			GPZ S	500	1993-2006
			698SM1		669SM1			KLE	500	1991-2007
			669SM1					KZR	500	1983-1985
			698SM1		712SM1			ZEPHYR	500	1991-1992
		715CM55		719CM56	719SM1			ZZR	500	1990
			669SM1					KZ F	550	1983-1984
			662SM1					KZ F	550	1985-1986
			662SM1		662SM1			KZ GP	550	1984-1985
			662SM1		662SM1			KZN	550	1984-1985
			698SM1	775CM56	775SM1			ZEPHYR	550	1993-2001

* articolo in esaurimento / to be discontinued

STRADA / ONROAD

			DISCHI / DISKS									
			ANTERIORE / FRONT								POSTERIORE / REAR	
MODELLO / MODEL	CC	ANNO / YEAR	BATFLY STRADA	SK2	BATFLY ENDURO	R-STX	W-FLO	R-FLO	W-FIX	R-FIX	W-FIX	R-FIX
ZR	550	1983-1985										
KLR	570	1985-1991								KW05FI		
ELIMINATOR	600	1986-1994								KW07FI		
ELIMINATOR	600	1995-1999		WK008L / WK008R		STX08						
GPX R	600	1985-1990										
GPZ R	600	1984-1990								KW02FI		
KLR	600	1985-1992								KW05FI		
KZ GP	600	1983										
ZX	600	1988-1990								KW02FI		
ZX6R NINJA	600	1995-1997		WK008L / WK008R		STX08						
ZX6R NINJA	600	1998-2001		WK008L / WK008R		STX08					KW30RID	KW30RI
ZX6R NINJA	600	2007-2011	BY770L / BY770R	WK070L / WK070R		STX70					KW30RID	KW30RI
ZX6R NINJA	600	2012	BY770L / BY770R	WK070L / WK070R		STX70					KW30RID	KW30RI
ZX6R NINJA	600	2013	BY770L / BY770R	WK070L / WK070R		STX70					KW30RID	KW30RI
ZX6R NINJA	600	2014	BY770L / BY770R	WK070L / WK070R		STX70					KW30RID	KW30RI
ZX6RR NINJA	600	2003-2004		WK048L / WK048R							KW30RID	KW30RI
ZX6RR NINJA	600	2005-2006	BY770L / BY770R	WK070L / WK070R		STX70					KW30RID	KW30RI
ZZR	600	1990-1992		WK008L / WK008R		STX08						
ZZR	600	1993-2003		WK008L / WK008R		STX08					KW15RID	
ZZR	600	2004-2005		WK008L / WK008R		STX08					KW15RID	
ZZR	600	2006		WK008L / WK008R		STX08					KW15RID	
ZX6R NINJA	636	2002		WK008L / WK008R		STX08					KW30RID	KW30RI
ZX6R NINJA	636	2003-2004		WK048L / WK048R							KW30RID	KW30RI
ZX6R NINJA	636	2005-2006	BY770L / BY770R	WK070L / WK070R		STX70					KW30RID	KW30RI
ZX6R NINJA	636	2013-2015	BY790L / BY790R	WK090L / WK090R		STX90					KW30RID	KW30RI
ZX6R NINJA ABS	636	2013-2015	BY790L / BY790R	WK090L / WK090R		STX90					KW30RID	KW30RI
ER6F	650	2006-2014		WK070L / WK070R		STX70	WL703L / WL703R				KW30RID	KW30RI
ER6F ABS	650	2006-2013										
ER6N	650	2006-2008		WK070L / WK070R		STX70	WL703L / WL703R				KW30RID	KW30RI
ER6N	650	2009-2011		WK070L / WK070R		STX70	WL703L / WL703R				KW30RID	KW30RI
ER6N	650	2012-2014		WK070L / WK070R		STX70	WL703L / WL703R				KW30RID	KW30RI
ER6N ABS	650	2006-2008										
ER6N ABS	650	2009-2011										
ER6N ABS	650	2012-2014										
KLR	650	1987-1994										KW16RI
KLR	650	1995-2007										KW16RI
VERSYS	650	2007-2014		WK070L / WK070R		STX70					KW30RID	KW30RI
VERSYS ABS	650	2007-2014										
W 650 (Rear Drum Model)	650	1999-2006										
KZN	700	1984-1985										
ELIMINATOR	750	1988-1989										
GPX R	750	1986-1990									KW15RID	
GPZ R	750	1985-1987								KW02FI		
GPZ TURBO	750	1983-1985										
GPZ UNITRAK	750	1983-1988								KW02FI		
GTR	750	1985-1986										
VN TWIN	750	1986-1988										
VZ TWIN	750	1988-1989										
Z 750	750	2004-2006		WK008L / WK008R		STX08					KW30RID	KW30RI
Z 750	750	2007-2012		WK070L / WK070R		STX70	WL703L / WL703R				KW40RID	RF7521
Z 750 ABS	750	2007-2012		WK070L / WK070R		STX70					KW40RID	RF7521
Z 750 R	750	2011-2012		WK070L / WK070R		STX70	WL703L / WL703R				KW40RID	RF7521
Z 750 R - ABS	750	2011-2012		WK070L / WK070R		STX70	WL703L / WL703R				KW40RID	RF7521
Z 750 S	750	2005-2006		WK008L / WK008R		STX08					KW30RID	KW30RI
Z 750LTD	750	1983-1984										
Z 750TURBO	750	1984-1986								KW07FI		KW02FI
Z GP	750	1983-1985										
ZEPHYR	750	1991-1999		WK008L / WK008R		STX08						
ZR7	750	1999-2003		WK008L / WK008R		STX08					KW15RID	
ZR7S	750	2001-2003		WK008L / WK008R		STX08					KW15RID	
ZX	750	1983-1985										
ZX7R NINJA	750	1996-2003		WK009L / WK009R		STX09						KW09RI
ZX7RR NINJA	750	1996-2002		WK009L / WK009R		STX09						KW09RI
ZX7RR NINJA	750	2003		WK009L / WK009R		STX09						KW09RI
ZXR	750	1989-1995		WK006L / WK006R		STX06						KW09RI
ZXR L	750	1993-1995		WK009L / WK009R		STX09						KW09RI

STRADA / ONROAD

PASTIGLIE / PADS						LEVE / LEVERS	KIT MAGGIORAZIONE OVERSIZE KIT			
ANTERIORE FRONT				POSTERIORE REAR		ANTERIORE FRONT	ANTERIORE FRONT			
P1R	CM66	CM55	SM1	CM56	SM1	LE*	OKI	MODELLO / MODEL	CC	ANNO / YEAR
			669SM1					ZR	550	1983-1985
			702SM1					KLR	570	1985-1991
			662SM1					ELIMINATOR	600	1986-1994
			698SM1					ELIMINATOR	600	1995-1999
			698SM1	698CM56	698SM1			GPX R	600	1985-1990
			662SM1		662SM1			GPZ R	600	1984-1990
			669SM1					KLR	600	1985-1992
			662SM1		662SM1			KZ GP	600	1983
			698SM1	698CM56	698SM1			ZX	600	1988-1990
		715CM55		775CM56	775SM1			ZX6R NINJA	600	1995-1997
	764CM66	764CM55		775CM56	775SM1			ZX6R NINJA	600	1998-2001
P1R927	927CM66	927CM55		775CM56	775SM1		OKWK05	ZX6R NINJA	600	2007-2011
P1R927	927CM66	927CM55		775CM56	775SM1		OKWK05	ZX6R NINJA	600	2012
P1R927	927CM66	927CM55		775CM56	775SM1		OKWK05	ZX6R NINJA	600	2013
P1R927	927CM66	927CM55		775CM56	775SM1			ZX6R NINJA	600	2014
	893CM66	893CM55		775CM56	775SM1			ZX6RR NINJA	600	2003-2004
	893CM66	893CM55		775CM56	775SM1		OKWK05	ZX6RR NINJA	600	2005-2006
		715CM55		698CM56	698SM1			ZZR	600	1990-1992
		715CM55		775CM56	775SM1			ZZR	600	1993-2003
		715CM55		775CM56	775SM1			ZZR	600	2004-2005
		715CM55		775CM56	775SM1			ZZR	600	2006
	764CM66	764CM55		775CM56	775SM1			ZX6R NINJA	636	2002
	893CM66	893CM55		775CM56	775SM1			ZX6R NINJA	636	2003-2004
	893CM66	893CM55		775CM56	775SM1		OKWK05	ZX6R NINJA	636	2005-2006
	959CM66	959CM55		925CM56				ZX6R NINJA	636	2013-2015
	959CM66	959CM55		925CM56				ZX6R NINJA ABS	636	2013-2015
		782CM55 / 787CM55		775CM56	775SM1			ER6F	650	2006-2014
		782CM55 / 787CM55		775CM56	775SM1			ER6F ABS	650	2006-2013
		782CM55 / 787CM55		775CM56	775SM1			ER6N	650	2006-2008
		782CM55 / 787CM55		775CM56	775SM1	LE1052* / LE1053* / LE2052* / LE2053*		ER6N	650	2009-2011
		782CM55 / 787CM55		775CM56	775SM1			ER6N	650	2012-2014
		782CM55 / 787CM55		775CM56	775SM1			ER6N ABS	650	2006-2008
		782CM55 / 787CM55		775CM56	775SM1	LE1052* / LE1053* / LE2052* / LE2053*		ER6N ABS	650	2009-2011
		782CM55 / 787CM55		775CM56	775SM1			ER6N ABS	650	2012-2014
			698SM1		669SM1			KLR	650	1987-1994
		782CM55			669SM1			KLR	650	1995-2007
		782CM55 / 787CM55		775CM56	775SM1			VERSYS	650	2007-2014
		782CM55 / 787CM55		775CM56	775SM1			VERSYS ABS	650	2007-2014
		787CM55						W 650 (Rear Drum Model)	650	1999-2006
			662SM1		662SM1			KZN	700	1984-1985
			662SM1		662SM1			ELIMINATOR	750	1988-1989
			698SM1	698CM56	698SM1			GPX R	750	1986-1990
			662SM1		662SM1			GPZ R	750	1985-1987
			662SM1		662SM1			GPZ TURBO	750	1983-1985
			662SM1		662SM1			GPZ UNITRAK	750	1983-1988
			662SM1		662SM1			GTR	750	1985-1986
			662SM1					VN TWIN	750	1986-1988
			662SM1					VZ TWIN	750	1988-1989
		782CM55 / 787CM55		775CM56	775SM1			Z 750	750	2004-2006
		716CM55		742CM56	742SM1			Z 750	750	2007-2012
		716CM55		742CM56	742SM1			Z 750 ABS	750	2007-2012
P1R927	927CM66	927CM55		956CM56			OKWK05	Z 750 R	750	2011-2012
P1R927	927CM66	927CM55		956CM56			OKWK05	Z 750 R - ABS	750	2011-2012
		782CM55 / 787CM55		775CM56	775SM1			Z 750 S	750	2005-2006
			662SM1		662SM1			Z 750LTD	750	1983-1984
			662SM1		662SM1			Z 750TURBO	750	1984-1986
			662SM1		662SM1			Z GP	750	1983-1985
			698SM1	698CM56	698SM1			ZEPHYR	750	1991-1999
		782CM55 / 787CM55			787SM1			ZR7	750	1999-2003
		782CM55 / 787CM55			787SM1			ZR7S	750	2001-2003
			662SM1		662SM1			ZX	750	1983-1985
	764CM66	764CM55		719CM56	719SM1			ZX7R NINJA	750	1996-2003
		801CM55	801SM1	875CM56	875SM1			ZX7RR NINJA	750	1996-2002
		801CM55		875CM56	875SM1			ZX7RR NINJA	750	2003
		715CM55		719CM56	719SM1			ZXR	750	1989-1995
								ZXR L	750	1993-1995

* articolo in esaurimento / to be discontinued

STRADA / ONROAD

			DISCHI / DISKS									
			ANTERIORE / FRONT								POSTERIORE / REAR	
MODELLO / MODEL	CC	ANNO / YEAR	BATFLY STRADA	SK2	BATFLY ENDURO	R-STX	W-FLO	R-FLO	W-FIX	R-FIX	W-FIX	R-FIX
ZXR R	750	1989-1992		WK006L / WK006R		STX06						KW09RI
ZXR R	750	1993-1995		WK009L / WK009R		STX09						KW09RI
W800	800	2011-2014										
Z 800	800	2014		WK090L / WK090R		STX90					KW40RID	RF7521
Z 800 ABS	800	2014		WK090L / WK090R		STX90					KW40RID	RF7521
Z 800e	800	2014		WK090L / WK090R		STX90					KW40RID	RF7521
Z 800e ABS	800	2014		WK090L / WK090R		STX90					KW40RID	RF7521
ELIMINATOR	900	1985-1987								KW07FI		KW02FI
GPZ	900	1984-1986										
GPZ R	900	1984-1986								KW07FI		KW02FI
GPZ R	900	1987-1989								KW07FI		KW02FI
GPZ R	900	1990-1998		WK008L / WK008R		STX08						
GPZ R	900	1999-2003		WK008L / WK008R		STX08						
ZX	900	1983-1984										
ZX9R NINJA	900	1994-1995		WK009L / WK009R		STX09						KW09RI
ZX9R NINJA	900	1996-1997		WK009L / WK009R		STX09						KW09RI
ZX9R NINJA	900	1998-1999		WK031L / WK031R							KW30RID	KW30RI
ZX9R NINJA	900	2000-2001		WK006L / WK006R		STX06					KW30RID	KW30RI
ZX9R NINJA	900	2002-2003		WK009L / WK009R		STX09					KW30RID	KW30RI
ELIMINATOR	1000	1986-1990								KW07FI		KW02FI
GPX R	1000	1986-1989								KW07FI		
GPZ RX	1000	1986-1989										
GTR	1000	1986-1993								KW02FI		KW09RI
GTR	1000	1994-2006		WK008L / WK008R		STX08						KW07FI
KLV	1000	2004-2007		WK068L / WK068R		STX68					KW38RID	RF7536
VERSYS	1000	2012		WK070L / WK070R		STX70					KW40RID	RF7521
VERSYS	1000	2013-2014		WK070L / WK070R		STX70					KW40RID	RF7521
Z 1000	1000	1981-1983										
Z 1000	1000	2003-2006		WK008L / WK008R		STX08					KW30RID	KW30RI
Z 1000	1000	2007-2009		WK070L / WK070R		STX70	WL703L / WL703R				KW40RID	RF7521
Z 1000	1000	2010-2013		WK070L / WK070R		STX70	WL703L / WL703R				KW40RID	RF7521
Z 1000	1000	2014									KW40RID	RF7521
Z 1000 - ABS	1000	2007-2009		WK070L / WK070R		STX70	WL703L / WL703R				KW40RID	RF7521
Z 1000 - ABS	1000	2010-2013		WK070L / WK070R		STX70	WL703L / WL703R				KW40RID	RF7521
Z 1000 - ABS	1000	2014									KW40RID	RF7521
Z 1000 SX	1000	2011-2013		WK070L / WK070R		STX70	WL703L / WL703R				KW40RID	RF7521
Z 1000 SX	1000	2014		WK070L / WK070R		STX70	WL703L / WL703R				KW40RID	RF7521
Z 1000 SX ABS	1000	2011-2013		WK070L / WK070R		STX70	WL703L / WL703R				KW40RID	RF7521
Z 1000 SX ABS	1000	2015		WK070L / WK070R		STX70	WL703L / WL703R				KW40RID	RF7521
ZG A CONCOURSE	1000	1986-1993										
ZG A CONCOURSE	1000	1994-2006										
ZR	1000	1986-1987										
ZX	1000	1988-1992										
ZX-10R	1000	2004-2005		WK070L / WK070R		STX70					KW30RID	KW30RI
ZX-10R	1000	2006-2007		WK070L / WK070R		STX70					KW30RID	KW30RI
ZX-10R	1000	2008-2010	BY790L / BY790R	WK090L / WK090R		STX90					KW30RID	KW30RI
ZX-10R	1000	2011-2013	BY790L / BY790R	WK090L / WK090R		STX90					KW30RID	KW30RI
ZX-10R	1000	2014	BY790L / BY790R	WK090L / WK090R		STX90					KW30RID	KW30RI
ZX-10R	1000	2015	BY790L / BY790R	WK090L / WK090R		STX90					KW30RID	KW30RI
ZX-10R ABS	1000	2011-2013	BY790L / BY790R	WK090L / WK090R		STX90					KW30RID	KW30RI
ZX-10R ABS	1000	2014	BY790L / BY790R	WK090L / WK090R		STX90					KW30RID	KW30RI
ZX-10R ABS	1000	2015	BY790L / BY790R	WK090L / WK090R		STX90					KW30RID	KW30RI
GPZ	1100	1983-1988										
GPZ	1100	1995-1998		WK008L / WK008R		STX08						
Z 1100 LTD	1100	1985-1987										
Z 1100R	1100	1984-1985										
ZEPHYR	1100	1993-1995		WK006L / WK006R		STX06						
ZEPHYR	1100	1996-1998		WK006L / WK006R		STX06						KW09RI
ZN VOYAGER	1100	1984-1986										
ZRX	1100	1997-2000		WK006L / WK006R		STX06					KW36RID	
ZX	1100	1983-1985										
ZX11 NINJA	1100	1989-1990										
ZZR	1100	1990-1992		WK006L / WK006R		STX06						
ZZR	1100	1993-1999		WK009L / WK009R		STX09						KW22RI
ZG A CONCOURSE	1200	1986-1997										
ZRX	1200	2001-2006		WK006L / WK006R		STX06					KW36RID	
ZRX R	1200	2001-2006		WK006L / WK006R		STX06					KW36RID	

STRADA / ONROAD

PASTIGLIE / PADS						LEVE / LEVERS	KIT MAGGIORAZIONE OVERSIZE KIT			
ANTERIORE FRONT				POSTERIORE REAR		ANTERIORE FRONT	ANTERIORE FRONT			
P1R	CM66	CM55	SM1	CM56	SM1	LE*	OKI	MODELLO / MODEL	CC	ANNO / YEAR
		715CM55		719CM56	719SM1			ZXR R	750	1989-1992
		715CM55		719CM56	719SM1			ZXR R	750	1993-1995
		787CM55						W800	800	2011-2014
		906CM55		956CM56				Z 800	800	2014
		906CM55		956CM56				Z 800 ABS	800	2014
		716CM55		956CM56				Z 800e	800	2014
		716CM55		956CM56				Z 800e ABS	800	2014
			662SM1		662SM1			ELIMINATOR	900	1985-1987
			662SM1		662SM1			GPZ	900	1984-1986
			662SM1		662SM1			GPZ R	900	1984-1986
								GPZ R	900	1987-1989
		715CM55		698CM56	698SM1			GPZ R	900	1990-1998
	764CM66	764CM55		698CM56	698SM1			GPZ R	900	1999-2003
			662SM1		662SM1			ZX	900	1983-1984
		715CM55		775CM56	775SM1			ZX9R NINJA	900	1994-1995
		801CM55	801SM1	775CM56	775SM1			ZX9R NINJA	900	1996-1997
	764CM66	764CM55		775CM56	775SM1			ZX9R NINJA	900	1998-1999
	764CM66	764CM55		775CM56	775SM1			ZX9R NINJA	900	2000-2001
		906CM55		775CM56	775SM1			ZX9R NINJA	900	2002-2003
			662SM1		662SM1			ELIMINATOR	1000	1986-1990
			662SM1		662SM1			GPX R	1000	1986-1989
			662SM1		662SM1			GPZ RX	1000	1986-1989
			662SM1		662SM1			GTR	1000	1986-1993
			698SM1		662SM1			GTR	1000	1994-2006
		782CM55 / 787CM55		742CM56	742SM1			KLV	1000	2004-2007
		715CM55		742CM56	742SM1			VERSYS	1000	2012
		715CM55		742CM56	742SM1			VERSYS	1000	2013-2014
			669SM1		669SM1			Z 1000	1000	1981-1983
		906CM55		775CM56	775SM1			Z 1000	1000	2003-2006
P1R927	927CM66	927CM55		742CM56	742SM1		OKWK05	Z 1000	1000	2007-2009
P1R898	898CM66	898CM55		775CM56	775SM1			Z 1000	1000	2010-2013
P1R898	898CM66	898CM55		775CM56	775SM1			Z 1000	1000	2014
P1R927	927CM66	927CM55		742CM56	742SM1		OKWK05	Z 1000 - ABS	1000	2007-2009
P1R898	898CM66	898CM55		775CM56	775SM1		OKWK05	Z 1000 - ABS	1000	2010-2013
P1R898	898CM66	898CM55		775CM56	775SM1			Z 1000 - ABS	1000	2014
P1R898	898CM66	898CM55		775CM56	775SM1			Z 1000 SX	1000	2011-2013
				775CM56	775SM1			Z 1000 SX	1000	2014
P1R898	898CM66	898CM55		775CM56	775SM1			Z 1000 SX ABS	1000	2011-2013
P1R898	898CM66	898CM55		775CM56	775SM1			Z 1000 SX ABS	1000	2015
			662SM1		662SM1			ZG A CONCOURSE	1000	1986-1993
			698SM1		662SM1			ZG A CONCOURSE	1000	1994-2006
			662SM1		662SM1			ZR	1000	1986-1987
			698SM1	698CM56	698SM1			ZX	1000	1988-1992
	893CM66	893CM55		775CM56	775SM1		OKWK05	ZX-10R	1000	2004-2005
	893CM66	893CM55		775CM56	775SM1		OKWK05	ZX-10R	1000	2006-2007
P1R898	898CM66	898CM55		775CM56	775SM1		OKWK01	ZX-10R	1000	2008-2010
P1R898	898CM66	898CM55		925CM56	925SM1		OKWK01	ZX-10R	1000	2011-2013
P1R898	898CM66	898CM55		925CM56	925SM1		OKWK01	ZX-10R	1000	2014
P1R898	898CM66	898CM55		925CM56	925SM1		OKWK01	ZX-10R	1000	2015
P1R898	898CM66	898CM55		925CM56	925SM1		OKWK01	ZX-10R ABS	1000	2011-2013
P1R898	898CM66	898CM55		925CM56	925SM1		OKWK01	ZX-10R ABS	1000	2014
P1R898	898CM66	898CM55		925CM56	925SM1		OKWK01	ZX-10R ABS	1000	2015
			662SM1		662SM1			GPZ	1100	1983-1988
		782CM55 / 787CM55		775CM56	775SM1			GPZ	1100	1995-1998
			662SM1		662SM1			Z 1100 LTD	1100	1985-1987
			662SM1		662SM1			Z 1100R	1100	1984-1985
			698SM1	698CM56	698SM1			ZEPHYR	1100	1993-1995
		782CM55 / 787CM55		698CM56	698SM1			ZEPHYR	1100	1996-1998
			662SM1		662SM1			ZN VOYAGER	1100	1984-1986
	764CM66	764CM55		719CM56	719SM1			ZRX	1100	1997-2000
			662SM1		662SM1			ZX	1100	1983-1985
			698SM1	698CM56	698SM1			ZX11 NINJA	1100	1989-1990
		715CM55		698CM56	698SM1			ZZR	1100	1990-1992
		715CM55		719CM56	719SM1			ZZR	1100	1993-1999
			662SM1		662SM1			ZG A CONCOURSE	1200	1986-1997
	764CM66	764CM55		719CM56	719SM1			ZRX	1200	2001-2006
	764CM66	764CM55		719CM56	719SM1			ZRX R	1200	2001-2006

* articolo in esaurimento / to be discontinued

STRADA / ONROAD

			DISCHI / DISKS									
			ANTERIORE / FRONT								POSTERIORE / REAR	
MODELLO / MODEL	CC	ANNO / YEAR	BATFLY STRADA	SK2	BATFLY ENDURO	R-STX	W-FLO	R-FLO	W-FIX	R-FIX	W-FIX	R-FIX
ZRX S	1200	2001-2006		WK006L / WK006R		STX06					KW36RID	
ZX12R NINJA	1200	2000-2003		WK009L / WK009R		STX09					KW34RID	
ZX12R NINJA	1200	2004-2006		WK008L / WK008R		STX08					KW34RID	
ZZR	1200	2002-2005		WK009L / WK009R		STX09						
Z 1300	1300	1985-1987										
ZN VOYAGER	1300	1983-1987										
GTR	1400	2007-2011		WK090L / WK090R		STX90						
GTR	1400	2012-2014		WK090L / WK090R		STX90						
ZZR	1400	2006-2007		WK090L / WK090R		STX90					KW40RID	RF7521
ZZR ABS	1400	2008-2013		WK090L / WK090R		STX90					KW40RID	RF7521
ZZR ABS	1400	2014		WK090L / WK090R		STX90					KW40RID	RF7521
KTM												
DUKE	125	2011-2013							WF7103		WF7514	
DUKE	125	2014							WF7107		WF7514	
RC	125	2014										
STING	125	1998		WK054L							KT11RID	
DUKE	200	2012-2013							WF7103		WF7514	
DUKE	200	2014							WF7107		WF7514	
RC	200	2014										
DUKE	390	2013-2014							WF7107		WF7514	
RC	390	2014										
LC4 ENDURO	600	1991-1992		WK054L			WL4007		KT02FID		KT11RID / WF4505	KT11RI
DUKE	620	1995-1998		WK054L								
LC4 ADVENTURE	620	1997-1998					KT03FLD	KT03FL			KT11RID	KT11RI
LC4 EGS	620	1996-2002		WK115L	BY104L		WL103L					
DUKE II	640	1999-2002		WK054L	BY104L		WL103L					
DUKE II	640	2003-2006		WK001L		STX01						
DUKE-E	640	1998		WK054L	BY104L		WL103L					
LC4 ADVENTURE	640	1998-2000					KT03FLD	KT03FL			KT11RID	KT11RI
LC4 ADVENTURE	640	2001-2003		WK115L	BY104L		WL103L				KT11RID	KT11RI
LC4 ADVENTURE	640	2004-2007					KT03FLD / KT08FLD	KT03FL			KT11RID	KT11RI
LC4 ENDURO	640	1999-2007		WK115L			KT03FLD	KT03FL			KT11RID	KT11RI
DUKE	690	2008-2011		WK073L		STX73					KT09RID	RF7544
DUKE	690	2012-2013		WK001L		STX01					KT09RID	RF7544
DUKE	690	2014		WK131L							KT09RID	RF7544
DUKE R	690	2010-2011									KT09RID	RF7544
DUKE R	690	2013-2014										
LC8 ADVENTURE	950	2002-2006					KT03FLD / KT08FLD	KT03FL			KT10RID	
LC8 ADVENTURE S	950	2004-2006					KT03FLD / KT08FLD	KT03FL			KT10RID	
SUPER ENDURO R	950	2006-2008					KT03FLD	KT03FL			KT10RID	
LC8 ADVENTURE ABS	990	2006-2008		WK120L / WK121R		STX120 / STX121					KT10RID	
LC8 ADVENTURE ABS	990	2009-2012		WK120L / WK121R		STX120 / STX121					WF7520	RF7545
LC8 ADVENTURE R	990	2010-2012					KT03FLD / KT08FLD	KT03FL			KT10RID	
LC8 ADVENTURE S	990	2006-2008					KT03FLD / KT08FLD	KT03FL			KT10RID	
SUPER DUKE	990	2005-2011		WK114L / WK114R							KT09RID	RF7544
SUPER DUKE R	990	2007-2013		WK114L / WK114R							KT09RID	RF7544
ADVENTURE	1190	2013-2014		WK130L / WK130R								
ADVENTURE R	1190	2013-2014		WK130L / WK130R								
RC8	1190	2008-2011		WK104L / WK104R							WF7504	
RC8 R	1190	2010-2012		WK104L / WK104R							WF7504	
SUPER DUKE R	1290	2014										
KYMCO												
CRUISER	125	1999-2000										
HIPSTER (Rear Drum Model)	125	1999-2006										
K-PIPE (Rear Drum Model)	125	2012-2013										
PULSAR	125	2001-2005										
QUANNON	125	2007-2013										
QUANNON NAKED	125	2010-2014										
STRIKER	125	1999-2006										
HIPSTER (Rear Drum Model)	150	1999-2006										
KB FREEWAY	150	1995										
LAVERDA												
GAUCHO	50	1990-1992										
OR ATLAS	50	1986-1988										
GS LESMO	125	1986-1990										
LB SPORT	125	1984-1988										

STRADA / ONROAD

PASTIGLIE / PADS						LEVE / LEVERS	KIT MAGGIORAZIONE OVERSIZE KIT			
ANTERIORE FRONT				POSTERIORE REAR		ANTERIORE FRONT	ANTERIORE FRONT			
P1R	CM66	CM55	SM1	CM56	SM1	LE*	OKI	MODELLO / MODEL	CC	ANNO / YEAR
	764CM66	764CM55		719CM56	719SM1			ZRX S	1200	2001-2006
	764CM66	764CM55		719CM56	719SM1			ZX12R NINJA	1200	2000-2003
	893CM66	893CM55		719CM56	719SM1			ZX12R NINJA	1200	2004-2006
		715CM55		719CM56	719SM1			ZZR	1200	2002-2005
			662SM1		662SM1			Z 1300	1300	1985-1987
			662SM1		662SM1			ZN VOYAGER	1300	1983-1987
P1R927	927CM66	927CM55		875CM56	875SM1	LE1042* / LE1046* / LE2042* / LE2046*		GTR	1400	2007-2011
P1R927	927CM66	927CM55		875CM56	875SM1			GTR	1400	2012-2014
P1R927	927CM66	927CM55		875CM56	875SM1	LE1042* / LE1046* / LE2042* / LE2046*		ZZR	1400	2006-2007
P1R927	927CM66	927CM55		875CM56	875SM1	LE1042* / LE1046* / LE2042* / LE2046*		ZZR ABS	1400	2008-2013
P1R927	927CM66	927CM55		875CM56	875SM1			ZZR ABS	1400	2014
								KTM		
		952CM55		773CM56	773SM1			DUKE	125	2011-2013
		952CM55		773CM56	773SM1			DUKE	125	2014
		952CM55		773CM56	773SM1			RC	125	2014
	688CM66	688CM55	688SM1	773CM56	773SM1			STING	125	1998
		952CM55		773CM56	773SM1			DUKE	200	2012-2013
		952CM55		773CM56	773SM1			DUKE	200	2014
		952CM55		773CM56	773SM1			RC	200	2014
		952CM55		773CM56	773SM1			DUKE	390	2013-2014
		952CM55		773CM56	773SM1			RC	390	2014
					669SM1			LC4 ENDURO	600	1991-1992
	688CM66	688CM55		773CM56	773SM1			DUKE	620	1995-1998
		746CM55	746SM1		773SM1			LC4 ADVENTURE	620	1997-1998
		746CM55		773CM56	773SM1			LC4 EGS	620	1996-2002
	784CM66	784CM55		773CM56	773SM1			DUKE II	640	1999-2002
	784CM66	784CM55		773CM56	773SM1			DUKE II	640	2003-2006
	688CM66	688CM55		773CM56	773SM1			DUKE-E	640	1998
		746CM55	746SM1		773SM1			LC4 ADVENTURE	640	1998-2000
		746CM55	746SM1		773SM1			LC4 ADVENTURE	640	2001-2003
		780CM55	780SM1		773SM1			LC4 ADVENTURE	640	2004-2007
		746CM55	746SM1		773SM1			LC4 ENDURO	640	1999-2007
	870CM66	870CM55		773CM56	773SM1			DUKE	690	2008-2011
	784CM66	784CM55		773CM56	773SM1			DUKE	690	2012-2013
	784CM66	784CM55		773CM56	773SM1			DUKE	690	2014
	870CM66	870CM55		773CM56	773SM1			DUKE R	690	2010-2011
P1R930	930CM66	930CM55		773CM56	773SM1			DUKE R	690	2013-2014
		780CM55			746SM1			LC8 ADVENTURE	950	2002-2006
		780CM55			746SM1			LC8 ADVENTURE S	950	2004-2006
		780CM55	780SM1		746SM1			SUPER ENDURO R	950	2006-2008
		780CM55			746SM1			LC8 ADVENTURE ABS	990	2006-2008
		780CM55			746SM1			LC8 ADVENTURE ABS	990	2009-2012
		780CM55			746SM1			LC8 ADVENTURE R	990	2010-2012
		780CM55			746SM1			LC8 ADVENTURE S	990	2006-2008
	870CM66	870CM55		773CM56	773SM1			SUPER DUKE	990	2005-2011
	870CM66	870CM55		773CM56	773SM1			SUPER DUKE R	990	2007-2013
	784CM66	784CM55			746SM1			ADVENTURE	1190	2013-2014
	784CM66	784CM55			746SM1			ADVENTURE R	1190	2013-2014
P1R930	930CM66	930CM55		828CM56	828SM1			RC8	1190	2008-2011
P1R930	930CM66	930CM55		828CM56	828SM1			RC8 R	1190	2010-2012
P1R930	930CM66	930CM55		828CM56	828SM1			SUPER DUKE R	1290	2014
								KYMCO		
			725SM1					CRUISER	125	1999-2000
			725SM1					HIPSTER (Rear Drum Model)	125	1999-2006
			725SM1					K-PIPE (Rear Drum Model)	125	2012-2013
			725SM1					PULSAR	125	2001-2005
			725SM1		725SM1			QUANNON	125	2007-2013
			725SM1		725SM1			QUANNON NAKED	125	2010-2014
			795SM1					STRIKER	125	1999-2006
			725SM1					HIPSTER (Rear Drum Model)	150	1999-2006
			701SM1					KB FREEWAY	150	1995
								LAVERDA		
			612SM1	612CM56	612SM1			GAUCHO	50	1990-1992
			612SM1					OR ATLAS	50	1986-1988
			648SM1		648SM1			GS LESMO	125	1986-1990
			648SM1					LB SPORT	125	1984-1988

* articolo in esaurimento / to be discontinued

STRADA / ONROAD

			DISCHI / DISKS									
			ANTERIORE / FRONT								POSTERIORE / REAR	
MODELLO / MODEL	CC	ANNO / YEAR	BATFLY STRADA	SK2	BATFLY ENDURO	R-STX	W-FLO	R-FLO	W-FIX	R-FIX	W-FIX	R-FIX
LB STRADA	125	1984-1988										
LB1	125	1985-1988										
LZ CUSTOM	125	1983-1986										
LZ ELEGANT	125	1984-1985										
LZ-ST-SP-FL	125	1982-1985										
NAVARRO	125	1990-1992										
GS LESMO	350	1986-1988										
OR ATLAS	600	1986-1990										
GHOST	650	1996-1999		WK001L / WK001R		STX01					YA08RID	YA08RI
SPORT	650	1995-2001		WK001L / WK001R		STX01					YA08RID	YA08RI
S FORMULA	750	1998-2001		WK001L / WK001R		STX01					YA08RID	YA08RI
STRIKE	750	1998-2001		WK001L / WK001R		STX01					YA08RID	YA08RI
SFC	1000	1986-1988										
MALAGUTI												
MRX	50	1989-1998										
RST	50	1989-1998										
XSM	50	2003										
XTM	50	2003										
MONDIAL												
EVO	1000	2004-2006										
PIEGA	1000	2003										
MONTESA												
EVASION	258	1991										
MORINI												
DART	350	1987-1989										
KANGURO	350	1987-1989										
NEW YORK 350	350	1988-1994										
CAMEL 501	500	1985-1986										
CAMEL 501	500	1987-1989										
COGUARO 501	500	1989-1990										
EXCALIBUR 501	500	1987										
EXCALIBUR 501	500	1989-1994										
KANGURO 501	500	1987-1990										
NEW YORK 501	500	1989-1994										
9 1/2	1200	2006-2010		WK001L / WK001R		STX01						
CORSARO	1200	2005-2009		WK001L / WK001R		STX01						
GRANPASSO	1200	2008-2009										
SCRAMBLER	1200	2008-2009										
MOTO GUZZI												
BX	125	1990										
TT	125	1985-1991										
NTX	350	1987-1993										
V35	350	1978-1983										
V35 2-3-C-GT-IMOLA-FLORIDA	350	1982-1989										
V35 TT ENDURO	350	1984-1989										
V50 C-2-3-MONZA-1-2-POLIZIA	500	1977-1985										
NTX	650	1987										
V65 GT-FLORIDA-CHOPPER-POLIZIA	650	1981-2007										
V65 TT-BAJA-ENDURO	650	1984-1988										
BREVA	750	2003-2007		WK001L		STX01						
LE MANS 1-2-3	750	1979-1985										
NEVADA	750	1991-2002										
NEVADA	750	2003-2007		WK001L		STX01						
NTX	750	1989-1994										
TARGA	750	1989-1994										
V7 CLASSIC	750	2008-2013		WK001L		STX01						
V7 RACER	750	2010-2013		WK001L		STX01						
V7 SPECIAL	750	2012-2013		WK001L		STX01						
V7 STONE	750	2012-2013		WK001L		STX01						
BREVA	850	2006-2008		WK001L / WK001R		STX01						
GRISO	850	2006		WK001L / WK001R		STX01						
NORGE T-GTL	850	2007		WK001L / WK001R		STX01						
NORGE T-GTL ABS	850	2007										
T3	850	1975-1985										
T4	850	1975-1985										

STRADA / ONROAD

PASTIGLIE / PADS						LEVE / LEVERS	KIT MAGGIORAZIONE OVERSIZE KIT			
ANTERIORE FRONT				POSTERIORE REAR		ANTERIORE FRONT	ANTERIORE FRONT			
P1R	CM66	CM55	SM1	CM56	SM1	LE*	OKI	MODELLO / MODEL	CC	ANNO / YEAR
			648SM1					LB STRADA	125	1984-1988
			648SM1					LB1	125	1985-1988
			648SM1					LZ CUSTOM	125	1983-1986
			648SM1					LZ ELEGANT	125	1984-1985
			612SM1					LZ-ST-SP-FL	125	1982-1985
				612CM56	612SM1			NAVARRO	125	1990-1992
		613CM55		612CM56	612SM1			GS LESMO	350	1986-1988
				612CM56	612SM1			OR ATLAS	600	1986-1990
	688CM66	688CM55		612CM56	612SM1			GHOST	650	1996-1999
	688CM66	688CM55		612CM56	612SM1			SPORT	650	1995-2001
	688CM66	688CM55		612CM56	612SM1			S FORMULA	750	1998-2001
	688CM66	688CM55		612CM56	612SM1			STRIKE	750	1998-2001
		613CM55		613CM56	613SM1			SFC	1000	1986-1988
								MALAGUTI		
			648SM1					MRX	50	1989-1998
			671SM1		671SM1			RST	50	1989-1998
			770SM1		878SM1			XSM	50	2003
			621SM1		621SM1			XTM	50	2003
								MONDIAL		
	870CM66	870CM55						EVO	1000	2004-2006
	870CM66	870CM55						PIEGA	1000	2003
								MONTESA		
			621SM1		621SM1			EVASION	258	1991
								MORINI		
				612CM56	612SM1			DART	350	1987-1989
				612CM56	612SM1			KANGURO	350	1987-1989
				612CM56	612SM1			NEW YORK 350	350	1988-1994
			612SM1					CAMEL 501	500	1985-1986
			684SM1	612CM56	612SM1			CAMEL 501	500	1987-1989
				612CM56	612SM1			COGUARO 501	500	1989-1990
			684SM1					EXCALIBUR 501	500	1987
				612CM56	612SM1			EXCALIBUR 501	500	1989-1994
				612CM56	612SM1			KANGURO 501	500	1987-1990
				612CM56	612SM1			NEW YORK 501	500	1989-1994
	784CM66	784CM55		828CM56	828SM1			9 1/2	1200	2006-2010
	784CM66	784CM55		828CM56	828SM1			CORSARO	1200	2005-2009
		780CM55			746SM1			GRANPASSO	1200	2008-2009
	784CM66	784CM55		828CM56	828SM1			SCRAMBLER	1200	2008-2009
								MOTO GUZZI		
			612SM1	612CM56	612SM1			BX	125	1990
			612SM1					TT	125	1985-1991
			612SM1	612CM56	612SM1			NTX	350	1987-1993
			612SM1	612CM56	612SM1			V35	350	1978-1983
			612SM1	612CM56	612SM1			V35 2-3-C-GT-IMOLA-FLORIDA	350	1982-1989
			612SM1	612CM56	612SM1			V35 TT ENDURO	350	1984-1989
			612SM1	612CM56	612SM1			V50 C-2-3-MONZA-1-2-POLIZIA	500	1977-1985
			612SM1	612CM56	612SM1			NTX	650	1987
			612SM1	612CM56	612SM1			V65 GT-FLORIDA-CHOPPER-POLIZIA	650	1981-2007
			612SM1	612CM56	612SM1			V65 TT-BAJA-ENDURO	650	1984-1988
	784CM66	784CM55		828CM56	828SM1			BREVA	750	2003-2007
		613CM55		612CM56	612SM1			LE MANS 1-2-3	750	1979-1985
			612SM1	612CM56	612SM1			NEVADA	750	1991-2002
	784CM66	784CM55		828CM56	828SM1			NEVADA	750	2003-2007
				612CM56	612SM1			NTX	750	1989-1994
			612SM1	612CM56	612SM1			TARGA	750	1989-1994
	784CM66	784CM55		828CM56	828SM1			V7 CLASSIC	750	2008-2013
	784CM66	784CM55		828CM56	828SM1			V7 RACER	750	2010-2013
	784CM66	784CM55						V7 SPECIAL	750	2012-2013
	784CM66	784CM55						V7 STONE	750	2012-2013
	784CM66	784CM55			746SM1			BREVA	850	2006-2008
	784CM66	784CM55			746SM1			GRISO	850	2006
	784CM66	784CM55			746SM1			NORGE T-GTL	850	2007
	784CM66	784CM55			746SM1			NORGE T-GTL ABS	850	2007
		613CM55		613CM56	613SM1			T3	850	1975-1985
		613CM55		613CM56	613SM1			T4	850	1975-1985

* articolo in esaurimento / to be discontinued

STRADA / ONROAD

			DISCHI / DISKS									
			ANTERIORE / FRONT								POSTERIORE / REAR	
MODELLO / MODEL	CC	ANNO / YEAR	BATFLY STRADA	SK2	BATFLY ENDURO	R-STX	W-FLO	R-FLO	W-FIX	R-FIX	W-FIX	R-FIX
T5	850	1986										
940C	940	2007										
CONVERT	1000	1975-1984										
DAYTONA IE	1000	1991-1994		WK015L / WK015R		STX15						
DAYTONA IE	1000	1995-2000		WK001L / WK001R		STX01						
G5	1000	1978-1984										
GT RL	1000	1987-1993										
LE MANS	1000	1985-1988										
QUOTA IE	1000	1995-1997										
SP 1	1000	1978-1988										
STRADA	1000	1993-1995										
V10 CENTAURO	1000	1996-2001		WK001L / WK001R		STX01						
V10 CENTAURO SPORT	1000	1998-2000		WK001L / WK001R		STX01						
BREVA	1100	2005-2007		WK001L / WK001R		STX01						
BREVA ABS	1100	2005-2007		WK001L / WK107R								
CALIFORNIA EV	1100	1996-2000		WK001L / WK001R		STX01						
CALIFORNIA EV SPECIAL	1100	1997-2003		WK001L / WK001R		STX01						
CALIFORNIA JACKAL	1100	2001-2006		WK001R		STX01						
GRISO	1100	2005-2008		WK001L / WK001R		STX01						
QUOTA ES	1100	1999										
SPORT	1100	1996		WK001L / WK001R		STX01						
V11 LE MANS	1100	2000-2005		WK001L / WK001R		STX01						
V11 SPORT	1100	1997-2000		WK001L / WK001R		STX01						
BREVA	1200	2008-2009		WK001L / WK001R		STX01						
BREVA ABS	1200	2008-2009		WK001L / WK107R								
GRISO 8 V	1200	2007-2013		WK001L / WK001R		STX01						
NORGE T-GTL	1200	2006		WK001L / WK001R		STX01						
NORGE T-GTL ABS	1200	2006-2009		WK001L / WK107R								
SPORT	1200	2006-2007		WK001L / WK001R		STX01						
SPORT 8V ABS	1200	2008-2010		WK001L / WK107R								
SPORT ABS	1200	2006-2007		WK001L / WK107R								
STELVIO	1200	2008-2009		WK001L / WK001R		STX01						
MV AGUSTA												
BRUTALE	675	2012-2014		WK116L / WK116R							WF7518	
F3	675	2012-2014		WK116L / WK116R							WF7518	
F3 SERIE ORO	675	2012-2013									WF7518	
BRUTALE	750	2001-2006									MV01RID	
BRUTALE S	750	2001-2006									MV01RID	
BRUTALE SERIE ORO	750	2002-2006									MV01RID	
F4	750	2000-2006									MV01RID	
F4 S	750	2000-2006									MV01RID	
F4 SENNA	750	2000-2006									MV01RID	
F4 SERIE ORO	750	1998-1999									MV01RID	
BRUTALE	800	2013-2014		WK116L / WK116R							WF7518	
F3	800	2014		WK116L / WK116R							WF7518	
RIVALE	800	2013-2014		WK116L / WK116R							WF7518	
BRUTALE R	910	2006-2008		WK092L / WK092R							MV01RID	
BRUTALE S	910	2006-2008									MV01RID	
BRUTALE	920	2010-2011										
BRUTALE	920	2012										
BRUTALE	989	2008-2009										
BRUTALE R	990	2010-2011										
F4 312 R	1000	2007										
F4 312 R	1000	2008-2009										
F4 312 RR	1000	2007-2008		WK092L / WK092R							MV01RID	
F4 AGO	1000	2005										
F4 FRECCE TRICOLORI	1000	2010		WK116L / WK116R								
F4 FRECCE TRICOLORI	1000	2011-2012		WK116L / WK116R								
F4 MAMBA	1000	2004-2007									MV01RID	
F4 R	1000	2006-2007		WK092L / WK092R							MV01RID	
F4 R	1000	2010-2013		WK116L / WK116R								
F4 RR	1000	2010-2013										
F4 RR CORSACORTA	1000	2011-2012		WK092L / WK092R							MV01RID	
F4 S	1000	2004-2007									MV01RID	
F4 SENNA	1000	2006									MV01RID	
F4 TAMBURINI	1000	2006-2008		WK092L / WK092R							MV01RID	
BRUTALE RR	1078	2008-2009		WK092L / WK092R							MV01RID	

STRADA / ONROAD

PASTIGLIE / PADS						LEVE / LEVERS	KIT MAGGIORAZIONE OVERSIZE KIT			
ANTERIORE FRONT				POSTERIORE REAR		ANTERIORE FRONT	ANTERIORE FRONT			
P1R	CM66	CM55	SM1	CM56	SM1	LE*	OKI	MODELLO / MODEL	CC	ANNO / YEAR
		613CM55		613CM56	613SM1			T5	850	1986
	784CM66	784CM55						940C	940	2007
		613CM55		613CM56	613SM1			CONVERT	1000	1975-1984
	688CM66	688CM55		612CM56	612SM1			DAYTONA IE	1000	1991-1994
	688CM66	688CM55		612CM56	612SM1			DAYTONA IE	1000	1995-2000
		613CM55		613CM56	613SM1			G5	1000	1978-1984
		613CM55		613CM56	613SM1			GT RL	1000	1987-1993
		613CM55		613CM56	613SM1			LE MANS	1000	1985-1988
		780CM55		612CM56	612SM1			QUOTA IE	1000	1995-1997
		613CM55		613CM56	613SM1			SP 1	1000	1978-1988
		613CM55		613CM56	613SM1			STRADA	1000	1993-1995
	688CM66	688CM55		612CM56	612SM1			V10 CENTAURO	1000	1996-2001
	688CM66	688CM55		612CM56	612SM1			V10 CENTAURO SPORT	1000	1998-2000
	784CM66	784CM55			746SM1			BREVA	1100	2005-2007
	784CM66	784CM55			746SM1			BREVA ABS	1100	2005-2007
	688CM66	688CM55		612CM56	612SM1			CALIFORNIA EV	1100	1996-2000
	784CM66	784CM55			780SM1			CALIFORNIA EV SPECIAL	1100	1997-2003
	784CM66	784CM55			780SM1			CALIFORNIA JACKAL	1100	2001-2006
	784CM66	784CM55			746SM1			GRISO	1100	2005-2008
		780CM55			746SM1			QUOTA ES	1100	1999
	688CM66	688CM55		612CM56	612SM1			SPORT	1100	1996
	784CM66	784CM55		612CM56	612SM1			V11 LE MANS	1100	2000-2005
	784CM66	784CM55		612CM56	612SM1			V11 SPORT	1100	1997-2000
	784CM66	784CM55			746SM1			BREVA	1200	2008-2009
	784CM66	784CM55			746SM1			BREVA ABS	1200	2008-2009
	784CM66	784CM55			746SM1			GRISO 8 V	1200	2007-2013
	784CM66	784CM55			746SM1			NORGE T-GTL	1200	2006
	784CM66	784CM55			746SM1			NORGE T-GTL ABS	1200	2006-2009
	784CM66	784CM55			746SM1			SPORT	1200	2006-2007
	784CM66	784CM55			746SM1			SPORT 8V ABS	1200	2008-2010
	784CM66	784CM55			746SM1			SPORT ABS	1200	2006-2007
	784CM66	784CM55			746SM1			STELVIO	1200	2008-2009
								MW AGUSTA		
	784CM66	784CM55		828CM56	828SM1			BRUTALE	675	2012-2014
	784CM66	784CM55		828CM56	828SM1			F3	675	2012-2014
P1R930	930CM66	930CM55		828CM56	828SM1			F3 SERIE ORO	675	2012-2013
		801CM55		907CM56				BRUTALE	750	2001-2006
		801CM55		907CM56				BRUTALE S	750	2001-2006
		801CM55		907CM56				BRUTALE SERIE ORO	750	2002-2006
		801CM55		907CM56				F4	750	2000-2006
		801CM55		907CM56				F4 S	750	2000-2006
		801CM55		907CM56				F4 SENNA	750	2000-2006
		801CM55		907CM56				F4 SERIE ORO	750	1998-1999
	784CM66	784CM55		828CM56	828SM1			BRUTALE	800	2013-2014
	930CM66	930CM55		828CM56	828SM1			F3	800	2014
		960CM55		828CM56	828SM1			RIVALE	800	2013-2014
	870CM66	870CM55		907CM56				BRUTALE R	910	2006-2008
		801CM55		907CM56				BRUTALE S	910	2006-2008
	784CM66	784CM55		907CM56				BRUTALE	920	2010-2011
	784CM66	784CM55		907CM56				BRUTALE	920	2012
	784CM66	784CM55		907CM56				BRUTALE	989	2008-2009
	784CM66	784CM55		907CM56				BRUTALE R	990	2010-2011
	870CM66	870CM55		907CM56				F4 312 R	1000	2007
P1R930	930CM66	930CM55		907CM56				F4 312 R	1000	2008-2009
	870CM66	870CM55		907CM56				F4 312 RR	1000	2007-2008
		801CM55		907CM56				F4 AGO	1000	2005
P1R930	930CM66	930CM55		907CM56				F4 FRECCE TRICOLORI	1000	2010
P1R930	930CM66	930CM55		907CM56				F4 FRECCE TRICOLORI	1000	2011-2012
		801CM55		907CM56				F4 MAMBA	1000	2004-2007
	870CM66	870CM55		907CM56				F4 R	1000	2006-2007
P1R930	930CM66	930CM55		907CM56				F4 R	1000	2010-2013
P1R930	930CM66	930CM55		907CM56				F4 RR	1000	2010-2013
P1R930	930CM66	930CM55				LE2033* / LE2045*		F4 RR CORSACORTA	1000	2011-2012
		801CM55		907CM56				F4 S	1000	2004-2007
	870CM66	870CM55		907CM56				F4 SENNA	1000	2006
	870CM66	870CM55		907CM56				F4 TAMBURINI	1000	2006-2008
P1R930	930CM66	930CM55		907CM56				BRUTALE RR	1078	2008-2009

* articolo in esaurimento / to be discontinued

STRADA / ONROAD

			DISCHI / DISKS									
			ANTERIORE / FRONT								POSTERIORE / REAR	
MODELLO / MODEL	CC	ANNO / YEAR	BATFLY STRADA	SK2	BATFLY ENDURO	R-STX	W-FLO	R-FLO	W-FIX	R-FIX	W-FIX	R-FIX
BRUTALE	1090	2013										
BRUTALE R	1090	2012-2013										
BRUTALE RR	1090	2010-2013										
MZ												
MOSKITO SX	50	2000										
ETZ	125	1982										
SM	125	1999-2001										
SM	125	2002										
SPORTSTAR	125	1993										
SX	125	1999-2001										
SX	125	2002										
ETZ	150	1982										
ETZ	250	1982										
ETZ	251	1989										
SPORTSTAR	251	1996										
ETZ	301	1990										
SPORTSTAR	301	1996										
SAXON COUNTRY- FUN	500	1992										
SILVER STAR CLASSIC	500	1993										
BAGHIRA	660	1996										
BLACK PANTHER	660	2000										
MASTIFF	660	1996										
SKORPION	660	1994										
STREET MOTO	660	2000										
1000 S	1000	2001-2002		WK001L / WK001R		STX01						
1000 S	1000	2003		WK001L / WK001R		STX01						
1000 SN- SF	1000	2005										
PEUGEOT												
TKR	50	2005										
X RACE	50	2002-2005									KM01FID	KM01FI
XP6 TRAIL	50	2004										
XPS ENDURO	50	2002										
XPS SM	50	2004										
XR6 RACE SPEC	50	2002										
XR6 STREET	50	2005										
RIEJU												
DRAC	50	1997										
FIRST- H²O	50	1997										
MRX PRO	50	2005										
MRX RACING	50	2003										
NKD	50	2007										
NKD	50	2008-2010										
RACING SPEC EDITION	50	2001										
RS1	50	1997-2000										
RS1	50	2001-2004										
SPIKE RACING	50	2002										
MR C- E	80	1988										
MRX PRO	125	2002-2006										
MRX RACING	125	2002-2006										
RR	125	1997										
RST	125	2001										
SMX	125	2002-2008										
SACHS												
MAD ASS	50	2004										
MAD ASS 4T	50	2005										
ROADSTER V2	125	2001										
X-ROAD	125	2005										
XTC- N	125	1999										
ZX	125	1999										
ZZ	125	1999										
MAD ASS	500	2005										
ROADSTER V1.6	650	2001										
B-805	800	2002										
ROADSTER V2	800	2000										
S-805	800	2003										

STRADA / ONROAD

PASTIGLIE / PADS						LEVE / LEVERS	KIT MAGGIORAZIONE OVERSIZE KIT			
ANTERIORE FRONT				POSTERIORE REAR		ANTERIORE FRONT	ANTERIORE FRONT			
P1R	CM66	CM55	SM1	CM56	SM1	LE*	OKI	MODELLO / MODEL	CC	ANNO / YEAR
	784CM66	784CM55		907CM56				BRUTALE	1090	2013
	784CM66	784CM55		907CM56				BRUTALE R	1090	2012-2013
P1R930	930CM66	930CM55		907CM56				BRUTALE RR	1090	2010-2013
								MZ		
			702SM1					MOSKITO SX	50	2000
		613CM55	613SM1					ETZ	125	1982
					725SM1			SM	125	1999-2001
			696SM1		725SM1			SM	125	2002
		613CM55	613SM1					SPORTSTAR	125	1993
					725SM1			SX	125	1999-2001
			696SM1		725SM1			SX	125	2002
		613CM55	613SM1					ETZ	150	1982
		613CM55	613SM1					ETZ	250	1982
		613CM55						ETZ	251	1989
		613CM55						SPORTSTAR	251	1996
		613CM55						ETZ	301	1990
		613CM55						SPORTSTAR	301	1996
		613CM55						SAXON COUNTRY- FUN	500	1992
		613CM55						SILVER STAR CLASSIC	500	1993
					743SM1			BAGHIRA	660	1996
					743SM1			BLACK PANTHER	660	2000
					743SM1			MASTIFF	660	1996
	688CM66	688CM55		612CM56	612SM1			SKORPION	660	1994
					743SM1			STREET MOTO	660	2000
	784CM66	784CM55			777SM1			1000 S	1000	2001-2002
		707CM55						1000 S	1000	2003
		707CM55		875CM56	875SM1			1000 SN- SF	1000	2005
								PEUGEOT		
			621SM1					TKR	50	2005
								X RACE	50	2002-2005
			621SM1		621SM1			XP6 TRAIL	50	2004
			621SM1		621SM1			XPS ENDURO	50	2002
			770SM1		621SM1			XPS SM	50	2004
			741SM1		621SM1			XR6 RACE SPEC	50	2002
			741SM1		621SM1			XR6 STREET	50	2005
								RIEJU		
			621SM1		621SM1			DRAC	50	1997
			621SM1					FIRST- H²O	50	1997
			741SM1		621SM1			MRX PRO	50	2005
			621SM1		621SM1			MRX RACING	50	2003
					621SM1			NKD	50	2007
			902SM1					NKD	50	2008-2010
			741SM1		621SM1			RACING SPEC EDITION	50	2001
			621SM1		621SM1			RS1	50	1997-2000
			741SM1		621SM1			RS1	50	2001-2004
			741SM1		621SM1			SPIKE RACING	50	2002
			621SM1					MR C- E	80	1988
			741SM1		621SM1			MRX PRO	125	2002-2006
			621SM1		621SM1			MRX RACING	125	2002-2006
			621SM1		621SM1			RR	125	1997
			621SM1		621SM1			RST	125	2001
			741SM1		621SM1			SMX	125	2002-2008
								SACHS		
			673SM1					MAD ASS	50	2004
					621SM1			MAD ASS 4T	50	2005
			684SM1					ROADSTER V2	125	2001
	688CM66	688CM55	688SM1		669SM1			X-ROAD	125	2005
	688CM66	688CM55	688SM1		669SM1			XTC- N	125	1999
			684SM1					ZX	125	1999
			684SM1		669SM1			ZZ	125	1999
	688CM66	688CM55			669SM1			MAD ASS	500	2005
	688CM66	688CM55			669SM1			ROADSTER V1.6	650	2001
	688CM66	688CM55						B-805	800	2002
	688CM66	688CM55			669SM1			ROADSTER V2	800	2000
	688CM66	688CM55						S-805	800	2003

* articolo in esaurimento / to be discontinued

STRADA / ONROAD

			DISCHI / DISKS									
			ANTERIORE / FRONT								POSTERIORE / REAR	
MODELLO / MODEL	CC	ANNO / YEAR	BATFLY STRADA	SK2	BATFLY ENDURO	R-STX	W-FLO	R-FLO	W-FIX	R-FIX	W-FIX	R-FIX
SCORPA												
SY Long Ride	250	2002-2007										
SY Long Ride	280	2002										
SUZUKI												
CONDOR	50	1989										
DR	50	1988-1993										
DR BIG	50	1989										
DR LC	50	1994										
GSX R	50	1987										
RG GAG	50	1987										
ZR	50	1981-1988										
DR BIG	80	1991										
GT	80	1981-1989										
X3E	80	1987										
DR	125	1986-2002										
RG F GAMMA	125	1992				STX11						
RV VAN VAN	125	2003-2010										
TS R	125	1989								SZ02FI		
TS X	125	1985-1989										
DR	200	1986-1989										
RG GAMMA	200	1991										
TS R	200	1989								SZ02FI		
COBRA	250	1989										
GF S	250	1988										
GN	250	1991										
GSF BANDIT	250	1990		WK012L / WK012R		STX12						
GSX R	250	1988										
GSX RR	250	1989										
INAZUMA	250	2012-2014										
RG	250	1983-1986										
RG	250	1987										
RG GAMMA	250	1986-1988										
RGV GAMMA	250	1989-1990										
RGV GAMMA	250	1991-1996				STX11						
TU X	250	1996										
DR R	350	1994-1999										SZ05RI
GOOSE	350	1992										
GS	400	1989		WK012L / WK012R		STX12						SZ14RI
GSF BANDIT	400	1989-1992		WK012L / WK012R		STX12						SZ14RI
GSF BANDIT	400	1993		WK012L / WK012R		STX12						SZ14RI
GSF BANDIT	400	1994-1996		WK012L / WK012R		STX12						SZ14RI
GSR	400	2006-2008		WK089L / WK089R				RL7010			SZ41RID	RF7535
GSX	400	1981-1987										
GSX F	400	1986-1987										
GSX KATANA	400	1992										
GSX R	400	1987										
GSX R	400	1988-1989										
RG GAMMA	400	1985-1988										
GS L	450	1982-1983										
GS L	450	1988										
GS S	450	1986-1989										
GS T	450	1982-1983										
GS E	500	1989-1994		WK012R		STX12						SZ14RI
GS E	500	1995-2003		WK012R		STX12						SZ14RI
GS E	500	2004-2005										
GS F	500	2004-2007		WK012R		STX12						SZ14RI
RG GAMMA	500	1985-1989										
GS E	550	1980-1983										
GS ME Katana	550	1981-1983										
GSX	550	1983-1987										
DR DJEBEL	600	1989								SZ02FI		SZ04RI
GSF BANDIT	600	1995-1999		WK013L / WK013R		STX13					SZ08RID	SZ08RI
GSF BANDIT	600	2000-2004		WK125L / WK125R		STX125					SZ08RID	SZ08RI
GSR	600	2006-2010		WK089L / WK089R				RL7010			SZ41RID	RF7535
GSX F	600	1988-1997										SZ14RI

STRADA / ONROAD

PASTIGLIE / PADS						LEVE / LEVERS	KIT MAGGIORAZIONE OVERSIZE KIT			
ANTERIORE FRONT				POSTERIORE REAR		ANTERIORE FRONT	ANTERIORE FRONT			
P1R	CM66	CM55	SM1	CM56	SM1	LE*	OKI	MODELLO / MODEL	CC	ANNO / YEAR
								SCORPA		
			831SM1		832SM1			SY Long Ride	250	2002-2007
					832SM1			SY Long Ride	280	2002
								SUZUKI		
			621SM1					CONDOR	50	1989
			621SM1					DR	50	1988-1993
			621SM1					DR BIG	50	1989
			621SM1					DR LC	50	1994
			669SM1					GSX R	50	1987
			669SM1					RG GAG	50	1987
			669SM1					ZR	50	1981-1988
			698SM1		722SM1			DR BIG	80	1991
			669SM1					GT	80	1981-1989
			669SM1					X3E	80	1987
			703SM1					DR	125	1986-2002
		715CM55	715SM1		728SM1			RG F GAMMA	125	1992
		787CM55	787SM1					RV VAN VAN	125	2003-2010
			696SM1		722SM1			TS R	125	1989
			703SM1					TS X	125	1985-1989
			703SM1					DR	200	1986-1989
		715CM55	715SM1					RG GAMMA	200	1991
			696SM1		722SM1			TS R	200	1989
			696SM1		722SM1			COBRA	250	1989
				719CM56	719SM1			GF S	250	1988
			646SM1					GN	250	1991
			698SM1	719CM56	719SM1			GSF BANDIT	250	1990
			680SM1	719CM56	719SM1			GSX R	250	1988
		715CM55	715SM1	719CM56	719SM1			GSX RR	250	1989
		720CM55	720SM1	956CM56				INAZUMA	250	2012-2014
			645SM1		645SM1			RG	250	1983-1986
					645SM1			RG	250	1987
				719CM56	719SM1			RG GAMMA	250	1986-1988
		715CM55	715SM1	719CM56	719SM1			RGV GAMMA	250	1989-1990
		715CM55	715SM1		712SM1			RGV GAMMA	250	1991-1996
			817SM1					TU X	250	1996
			696SM1		722SM1			DR R	350	1994-1999
		715CM55		719CM56	719SM1			GOOSE	350	1992
		715CM55			645SM1			GS	400	1989
			698SM1		645SM1			GSF BANDIT	400	1989-1992
		715CM55		719CM56	719SM1			GSF BANDIT	400	1993
		782CM55		719CM56	719SM1			GSF BANDIT	400	1994-1996
		715CM55		924CM56	924SM1			GSR	400	2006-2008
			646SM1		622SM1			GSX	400	1981-1987
			719SM1	719CM56	719SM1			GSX F	400	1986-1987
		715CM55		719CM56	719SM1			GSX KATANA	400	1992
			680SM1	719CM56	719SM1			GSX R	400	1987
		715CM55		719CM56	719SM1			GSX R	400	1988-1989
			719SM1					RG GAMMA	400	1985-1988
			646SM1					GS L	450	1982-1983
			681SM1					GS L	450	1988
			669SM1					GS S	450	1986-1989
			646SM1					GS T	450	1982-1983
			698SM1	719CM56	719SM1			GS E	500	1989-1994
		787CM55		719CM56	719SM1			GS E	500	1995-2003
		787CM55		719CM56	719SM1			GS E	500	2004-2005
		787CM55		719CM56	719SM1			GS F	500	2004-2007
			680SM1	719CM56	719SM1			RG GAMMA	500	1985-1989
			646SM1		622SM1			GS E	550	1980-1983
					622SM1			GS ME Katana	550	1981-1983
			719SM1	719CM56	719SM1			GSX	550	1983-1987
			709SM1		728SM1			DR DJEBEL	600	1989
		716CM55		719CM56	719SM1			GSF BANDIT	600	1995-1999
		782CM55 / 787CM55		719CM56	719SM1			GSF BANDIT	600	2000-2004
		715CM55		924CM56	924SM1			GSR	600	2006-2010
			717SM1	719CM56	719SM1			GSX F	600	1988-1997

* articolo in esaurimento / to be discontinued

STRADA / ONROAD

			DISCHI / DISKS									
			ANTERIORE / FRONT								POSTERIORE / REAR	
MODELLO / MODEL	CC	ANNO / YEAR	BATFLY STRADA	SK2	BATFLY ENDURO	R-STX	W-FLO	R-FLO	W-FIX	R-FIX	W-FIX	R-FIX
GSX F	600	1998-2003		WK125L / WK125R		STX125					SZ08RID	SZ08RI
GSX F	600	2004-2006		WK069L / WK069R		STX69					SZ08RID	SZ08RI
GSX R	600	1997-2003		WK020L / WK020R		STX20					SZ22RID	SZ22RI
GSX R	600	2004-2005		WK067L / WK067R		STX67					SZ22RID	SZ22RI
GSX R	600	2006-2007		WK076L / WK076R		STX76					SZ22RID	SZ22RI
GSX R	600	2008-2010	BY701L / BY701R	WK101L / WK101R		STX101					SZ22RID	SZ22RI
GSX R	600	2011-2014	BY701L / BY701R	WK101L / WK101R		STX101					SZ22RID	SZ22RI
RF R	600	1993-1997		WK013L / WK013R		STX13					SZ08RID	SZ08RI
SP F	600	1985-1987										
DL V-STROM	650	2004-2006		WK068L / WK068R		STX68					KW38RID	RF7536
DL V-STROM	650	2007-2012		WK089L / WK089R	BY106L / BY106R		WL105L / WL105R	RL7010			KW38RID	RF7536
DL V-STROM ABS	650	2007-2012		WK089L / WK089R	BY106L / BY106R		WL105L / WL105R	RL7010			KW38RID	RF7536
DL V-STROM ABS	650	2013-2014		WK089L / WK089R	BY106L / BY106R		WL105L / WL105R	RL7010				
DR	650	1991-1995								SZ09FI		SZ04RI
DR DJEBEL	650	1990-1995										SZ04RI
DR R	650	1990-1993										SZ04RI
DR RE	650	1994-1995										SZ04RI
DR RS	650	1990-1991										SZ04RI
DR RSE	650	1991-1993										SZ04RI
DR SE	650	1996-2009						SZ06FL				
GLADIUS	650	2009-2014		WK093L / WK093R		STX93					SZ41RID	RF7535
GLADIUS ABS	650	2009-2014		WK093L / WK093R		STX93					SZ41RID	RF7535
GS	650	1981-1986										
GSF BANDIT	650	2005		WK069L / WK069R		STX69	WL705L / WL705R				SZ08RID	SZ08RI
GSF BANDIT	650	2006		WK069L / WK069R		STX69	WL705L / WL705R				SZ08RID	SZ08RI
GSF BANDIT	650	2007-2012		WK089L / WK089R				RL7010			SZ41RID	RF7535
GSF BANDIT ABS	650	2011-2014		WK089L / WK089R				RL7010			SZ41RID	RF7535
GSX	650	1986										
GSX F	650	2008-2010		WK089L / WK089R				RL7010			SZ41RID	RF7535
GSX F	650	2011		WK089L / WK089R				RL7010			SZ41RID	RF7535
GSX F	650	2012		WK089L / WK089R				RL7010			SZ41RID	RF7535
GSX F ABS	650	2008-2014		WK089L / WK089R				RL7010			SZ41RID	RF7535
LS SAVAGE	650	1988-1994										
SV	650	1999-2002		WK125L / WK125R		STX125					SZ08RID	SZ08RI
SV	650	2003-2010		WK069L / WK069R		STX69	WL705L / WL705R				SZ22RID	SZ22RI
SV ABS	650	2007-2010		WK093L / WK093R		STX93						
SV S	650	1999-2002		WK125L / WK125R		STX125					SZ08RID	SZ08RI
SV S	650	2003-2009		WK069L / WK069R		STX69	WL705L / WL705R				SZ22RID	SZ22RI
SV S ABS	650	2007-2009		WK093L / WK093R		STX93						
XF FREEWIND	650	1997-2002								SZ09FI		
GS E	700	1985-1988										
GS ES	700	1985-1988										
GV MADURA	700	1984-1987										
DR BIG	750	1988-1989										SZ04RI
DR BIG S	750	1987-1988										
GS	750	1980-1983										
GS KATANA	750	1982-1986										
GSR	750	2011-2014		WK089L / WK089R				RL7010			SZ41RID	RF7535
GSR ABS	750	2011-2014		WK089L / WK089R				RL7010			SZ41RID	RF7535
GSX	750	1980-1986										
GSX	750	1987-1988										
GSX	750	1989-1992										SZ14RI
GSX	750	1997-2003				STX11					SZ08RID	SZ08RI
GSX F	750	1998-2003		WK125L / WK125R		STX125					SZ08RID	SZ08RI
GSX F	750	2004-2006		WK069L / WK069R		STX69					SZ08RID	SZ08RI
GSX R	750	1985-1988									SZ08RID	SZ08RI
GSX R	750	1989-1993		WK010L / WK010R		STX10					SZ08RID	SZ08RI
GSX R	750	1994-1995		WK010L / WK010R		STX10					SZ08RID	SZ08RI
GSX R	750	1996-1999		WK020L / WK020R		STX20					SZ22RID	SZ22RI
GSX R	750	2000-2003		WK020L / WK020R		STX20					SZ22RID	SZ22RI
GSX R	750	2004-2005		WK067L / WK067R		STX67					SZ22RID	SZ22RI
GSX R	750	2006-2007		WK076L / WK076R		STX76					SZ22RID	SZ22RI
GSX R	750	2008-2010	BY701L / BY701R	WK101L / WK101R		STX101					SZ22RID	SZ22RI
GSX R	750	2011-2014	BY701L / BY701R	WK101L / WK101R		STX101					SZ22RID	SZ22RI
GSX R LIMITED EDITION	750	1989-1990		WK010L / WK010R		STX10						
GSX S KATANA	750	1982-1985										

STRADA / ONROAD

PASTIGLIE / PADS						LEVE / LEVERS	KIT MAGGIORAZIONE OVERSIZE KIT			
ANTERIORE FRONT				POSTERIORE REAR		ANTERIORE FRONT	ANTERIORE FRONT			
P1R	CM66	CM55	SM1	CM56	SM1	LE*	OKI	MODELLO / MODEL	CC	ANNO / YEAR
		782CM55 / 787CM55		719CM56	719SM1			GSX F	600	1998-2003
		782CM55 / 787CM55		719CM56	719SM1			GSX F	600	2004-2006
		715CM55		719CM56	719SM1			GSX R	600	1997-2003
P1R898	898CM66	898CM55		875CM56	875SM1		OKWK04	GSX R	600	2004-2005
P1R898	898CM66	898CM55		924CM56	924SM1		OKWK06	GSX R	600	2006-2007
P1R898	898CM66	898CM55		924CM56	924SM1		OKWK02	GSX R	600	2008-2010
P1R930	930CM66	930CM55		925CM56	925SM1			GSX R	600	2011-2014
		716CM55		719CM56	719SM1			RF R	600	1993-1997
			681SM1					SP F	600	1985-1987
		782CM55 / 787CM55		742CM56	742SM1			DL V-STROM	650	2004-2006
		782CM55 / 787CM55		742CM56	742SM1			DL V-STROM	650	2007-2012
		782CM55 / 787CM55		742CM56	742SM1			DL V-STROM ABS	650	2007-2012
		782CM55 / 787CM55		742CM56	742SM1			DL V-STROM ABS	650	2013-2014
			709SM1		728SM1			DR	650	1991-1995
			709SM1		728SM1			DR DJEBEL	650	1990-1995
			709SM1		728SM1			DR R	650	1990-1993
			709SM1		728SM1			DR RE	650	1994-1995
			709SM1		728SM1			DR RS	650	1990-1991
			709SM1		728SM1			DR RSE	650	1991-1993
					722SM1			DR SE	650	1996-2009
		782CM55 / 787CM55		956CM56				GLADIUS	650	2009-2014
		782CM55 / 787CM55		956CM56				GLADIUS ABS	650	2009-2014
					622SM1			GS	650	1981-1986
		782CM55 / 787CM55		875CM56	875SM1			GSF BANDIT	650	2005
		782CM55 / 787CM55		742CM56	742SM1			GSF BANDIT	650	2006
		715CM55		742CM56	742SM1			GSF BANDIT	650	2007-2012
		715CM55		742CM56	742SM1			GSF BANDIT ABS	650	2011-2014
			680SM1		680SM1			GSX	650	1986
		715CM55		742CM56	742SM1			GSX F	650	2008-2010
		715CM55		742CM56	742SM1	LE1006* / LE1023* / LE2006* / LE2023*		GSX F	650	2011
		715CM55		742CM56	742SM1			GSX F	650	2012
		715CM55		742CM56	742SM1			GSX F ABS	650	2008-2014
			681SM1					LS SAVAGE	650	1988-1994
		782CM55 / 787CM55		719CM56	719SM1			SV	650	1999-2002
		782CM55 / 787CM55		742CM56	742SM1			SV	650	2003-2010
		782CM55 / 787CM55		742CM56	742SM1			SV ABS	650	2007-2010
		782CM55 / 787CM55		719CM56	719SM1			SV S	650	1999-2002
		782CM55 / 787CM55		742CM56	742SM1			SV S	650	2003-2009
		782CM55 / 787CM55		742CM56	742SM1			SV S ABS	650	2007-2009
		787CM55		711CM56	711SM1			XF FREEWIND	650	1997-2002
			646SM1		622SM1			GS E	700	1985-1988
			646SM1		622SM1			GS ES	700	1985-1988
			646SM1					GV MADURA	700	1984-1987
			709SM1		728SM1			DR BIG	750	1988-1989
			709SM1					DR BIG S	750	1987-1988
			646SM1		622SM1			GS	750	1980-1983
					622SM1			GS KATANA	750	1982-1986
		782CM55 / 787CM55		742CM56	742SM1			GSR	750	2011-2014
		782CM55 / 787CM55		742CM56	742SM1			GSR ABS	750	2011-2014
			646SM1		622SM1			GSX	750	1980-1986
			680SM1	719CM56	719SM1			GSX	750	1987-1988
			717SM1	719CM56	719SM1			GSX	750	1989-1992
		782CM55 / 787CM55		719CM56	719SM1			GSX	750	1997-2003
		782CM55 / 787CM55		719CM56	719SM1			GSX F	750	1998-2003
		782CM55 / 787CM55		719CM56	719SM1			GSX F	750	2004-2006
			680SM1		645SM1			GSX R	750	1985-1988
		707CM55		719CM56	719SM1			GSX R	750	1989-1993
	764CM66	764CM55		719CM56	719SM1			GSX R	750	1994-1995
	764CM66	764CM55		719CM56	719SM1			GSX R	750	1996-1999
		715CM55		719CM56	719SM1			GSX R	750	2000-2003
P1R898	898CM66	898CM55		875CM56	875SM1	LE1011* / LE1043* / LE2011* / LE2043*	OKWK04	GSX R	750	2004-2005
P1R898	898CM66	898CM55		924CM56	924SM1		OKWK06	GSX R	750	2006-2007
P1R898	898CM66	898CM55		924CM56	924SM1		OKWK02	GSX R	750	2008-2010
P1R930	930CM66	930CM55		925CM56	925SM1			GSX R	750	2011-2014
		707CM55			645SM1			GSX R LIMITED EDITION	750	1989-1990
			646SM1		622SM1			GSX S KATANA	750	1982-1985

* articolo in esaurimento / to be discontinued

STRADA / ONROAD

			DISCHI / DISKS									
			ANTERIORE / FRONT								POSTERIORE / REAR	
MODELLO / MODEL	CC	ANNO / YEAR	BATFLY STRADA	SK2	BATFLY ENDURO	R-STX	W-FLO	R-FLO	W-FIX	R-FIX	W-FIX	R-FIX
GSX S KATANA	750	1986-1988										
GSX SE	750	1984-1985										
DR BIG S	800	1989-1990										SZ04RI
DR BIG S	800	1991-1996								SZ09FI		SZ04RI
VX	800	1990-1993										
VX	800	1994										
GS	850	1980-1985										
XN 85 D TURBO	850	1983-1985										
RF	900	1994-1997		WK012L / WK012R		STX12					SZ08RID	SZ08RI
DL V-STROM	1000	2002-2010		WK068L / WK068R		STX68					KW38RID	RF7536
DL V-STROM ABS	1000	2014									KW38RID	RF7536
GS	1000	1980-1981										
GS EX	1000	1981-1982										
GSX	1000	1982-1983										
GSX KATANA	1000	1982-1983										
GSX R	1000	2001-2002		WK020L / WK020R		STX20					SZ22RID	SZ22RI
GSX R	1000	2003		WK067L / WK067R		STX67					SZ22RID	SZ22RI
GSX R	1000	2004		WK067L / WK067R		STX67					SZ22RID	SZ22RI
GSX R	1000	2005-2006		WK076L / WK076R		STX76					SZ22RID	SZ22RI
GSX R	1000	2007-2008		WK076L / WK076R		STX76					SZ22RID	SZ22RI
GSX R	1000	2009-2011	BY701L / BY701R	WK101L / WK101R		STX101					SZ22RID	SZ22RI
GSX R	1000	2012-2014	BY701L / BY701R	WK101L / WK101R		STX101					SZ22RID	SZ22RI
SV	1000	2003-2007		WK068L / WK068R		STX68					SZ22RID	SZ22RI
SV S	1000	2003-2007		WK068L / WK068R		STX68					SZ22RID	SZ22RI
TL R	1000	1998-2003		WK020L / WK020R		STX20					SZ22RID	SZ22RI
TL S	1000	1997-2001		WK020L / WK020R		STX20					SZ22RID	SZ22RI
GS	1100	1982-1984										
GS G	1100	1985-1986										
GSX	1100	1980-1983										
GSX	1100	1984-1988										
GSX F	1100	1986-1987										
GSX F	1100	1988-1993										
GSX G	1100	1991-1994										
GSX G	1100	1995										
GSX KATANA	1100	1982-1987										
GSX R	1100	1987-1988									SZ22RID	SZ22RI
GSX R	1100	1989-1992		WK010L / WK010R		STX10					SZ08RID	SZ08RI
GSX R	1100	1993-2000		WK010L / WK010R		STX10					SZ08RID	SZ08RI
GSF BANDIT	1200	1996-2000		WK012L / WK012R		STX12					SZ08RID	SZ08RI
GSF BANDIT	1200	2001-2005		WK012L / WK012R		STX12					SZ08RID	SZ08RI
GSF BANDIT	1200	2006		WK089L / WK089R				RL7010			SZ41RID	RF7535
GSX	1200	1999-2003		WK012L / WK012R		STX12					SZ08RID	SZ08RI
GV MADURA	1200	1985										
GSF BANDIT	1250	2007-2011		WK089L / WK089R				RL7010			SZ41RID	RF7535
GSF BANDIT S	1250	2011-2012		WK089L / WK089R				RL7010			SZ41RID	RF7535
GSX FA	1250	2010-2014		WK089L / WK089R				RL7010			SZ41RID	RF7535
B-KING	1300	2008-2010		WK089L / WK089R				RL7010			WF7501	RF7537
GSX R HAYABUSA	1300	1999-2007		WK020L / WK020R		STX20					SZ08RID	SZ08RI
GSX R HAYABUSA	1300	2008-2012		WK089L / WK089R				RL7010			WF7501	RF7537
CAVALCADE	1400	1985-1986										
CAVALCADE	1400	1987-1988										
GSX	1400	2002-2007		WK020L / WK020R		STX20						RF7538
SYM												
SB NI	125	2011										
WOLF	125	2011										
WOLF LEGEND	125	2004-2005										
XS	125	2007-2010										
TRIUMPH												
BABY SPEED	600	2001-2002		WK085L / WK085R							HO22RID	HO22RI
DAYTONA	600	2003-2007		WK085L / WK085R							HO22RID	HO22RI
SPEED FOUR	600	2003-2006		WK085L / WK085R							HO22RID	HO22RI
TT	600	2000-2003		WK085L / WK085R							HO22RID	HO22RI
DAYTONA	650	2005-2006		WK085L / WK085R								
DAYTONA	675	2006-2008		WK094L / WK094R		STX94					HO22RID	HO22RI
DAYTONA	675	2009-2012		WK094L / WK094R		STX94					HO22RID	HO22RI

STRADA / ONROAD

PASTIGLIE / PADS						LEVE / LEVERS	KIT MAGGIORAZIONE OVERSIZE KIT			
ANTERIORE FRONT				POSTERIORE REAR		ANTERIORE FRONT	ANTERIORE FRONT			
P1R	CM66	CM55	SM1	CM56	SM1	LE*	OKI	MODELLO / MODEL	CC	ANNO / YEAR
					622SM1			GSX S KATANA	750	1986-1988
			719SM1	719CM56	719SM1			GSX SE	750	1984-1985
			709SM1		728SM1			DR BIG S	800	1989-1990
			698SM1		725SM1			DR BIG S	800	1991-1996
			698SM1		717SM1			VX	800	1990-1993
		782CM55			717SM1			VX	800	1994
			646SM1		622SM1			GS	850	1980-1985
					622SM1			XN 85 D TURBO	850	1983-1985
			719SM1					RF	900	1994-1997
		782CM55 / 787CM55		742CM56	742SM1			DL V-STROM	1000	2002-2010
								DL V-STROM ABS	1000	2014
			646SM1		622SM1			GS	1000	1980-1981
					622SM1			GS EX	1000	1981-1982
					622SM1			GSX	1000	1982-1983
					622SM1			GSX KATANA	1000	1982-1983
	764CM66	764CM55		875CM56	875SM1			GSX R	1000	2001-2002
	893CM66	893CM55		875CM56	875SM1		OKWK04	GSX R	1000	2003
P1R898	898CM66	898CM55		875CM56	875SM1		OKWK04	GSX R	1000	2004
P1R898	898CM66	898CM55		875CM56	875SM1			GSX R	1000	2005-2006
P1R898	898CM66	898CM55		924CM56	924SM1	LE1006* / LE1011* / LE2006* / LE2011*		GSX R	1000	2007-2008
P1R898	898CM66	898CM55		925CM56	925SM1			GSX R	1000	2009-2011
P1R930	930CM66	930CM55		925CM56	925SM1			GSX R	1000	2012-2014
		715CM55		742CM56	742SM1			SV	1000	2003-2007
		715CM55		742CM56	742SM1			SV S	1000	2003-2007
	764CM66	764CM55		719CM56	719SM1			TL R	1000	1998-2003
		715CM55		719CM56	719SM1			TL S	1000	1997-2001
					622SM1			GS	1100	1982-1984
					622SM1			GS G	1100	1985-1986
					622SM1			GSX	1100	1980-1983
			680SM1		680SM1			GSX	1100	1984-1988
			719SM1	719CM56	719SM1			GSX F	1100	1986-1987
			717SM1		680SM1			GSX F	1100	1988-1993
			698SM1		717SM1			GSX G	1100	1991-1994
		782CM55 / 787CM55			717SM1			GSX G	1100	1995
					622SM1			GSX KATANA	1100	1982-1987
			680SM1		645SM1			GSX R	1100	1987-1988
		707CM55		719CM56	719SM1			GSX R	1100	1989-1992
	764CM66	764CM55		719CM56	719SM1			GSX R	1100	1993-2000
		707CM55		719CM56	719SM1			GSF BANDIT	1200	1996-2000
	764CM66	764CM55		719CM56	719SM1			GSF BANDIT	1200	2001-2005
		715CM55		742CM56	742SM1			GSF BANDIT	1200	2006
	784CM66	784CM55		719CM56	719SM1			GSX	1200	1999-2003
			646SM1		622SM1			GV MADURA	1200	1985
		715CM55		742CM56	742SM1			GSF BANDIT	1250	2007-2011
		715CM55		742CM56	742SM1			GSF BANDIT S	1250	2011-2012
		715CM55		742CM56	742SM1			GSX FA	1250	2010-2014
		906CM55		924CM56	924SM1		OKWK03	B-KING	1300	2008-2010
	764CM66	764CM55		719CM56	719SM1			GSX R HAYABUSA	1300	1999-2007
P1R898	898CM66	898CM55		924CM56	924SM1	LE1023* / LE1050* / LE2023* / LE2050*	OKWK03	GSX R HAYABUSA	1300	2008-2012
					622SM1			CAVALCADE	1400	1985-1986
			680SM1		680SM1			CAVALCADE	1400	1987-1988
	764CM66	764CM55		875CM56	875SM1			GSX	1400	2002-2007
								SYM		
			948SM1		923SM1			SB NI	125	2011
			948SM1		923SM1			WOLF	125	2011
			673SM1					WOLF LEGEND	125	2004-2005
			725SM1					XS	125	2007-2010
								TRIUMPH		
		707CM55		742CM56	742SM1			BABY SPEED	600	2001-2002
		707CM55		711CM56	711SM1			DAYTONA	600	2003-2007
		707CM55		711CM56	711SM1			SPEED FOUR	600	2003-2006
		707CM55		742CM56	742SM1			TT	600	2000-2003
		707CM55		711CM56	711SM1			DAYTONA	650	2005-2006
		906CM55		711CM56	711SM1			DAYTONA	675	2006-2008
	941CM66	941CM55		711CM56	711SM1			DAYTONA	675	2009-2012

* articolo in esaurimento / to be discontinued

STRADA / ONROAD

			DISCHI / DISKS									
			ANTERIORE / FRONT								POSTERIORE / REAR	
MODELLO / MODEL	CC	ANNO / YEAR	BATFLY STRADA	SK2	BATFLY ENDURO	R-STX	W-FLO	R-FLO	W-FIX	R-FIX	W-FIX	R-FIX
DAYTONA	675	2013										
DAYTONA R	675	2011		WK094L / WK094R		STX94					HO22RID	HO22RI
DAYTONA R	675	2012									HO22RID	HO22RI
DAYTONA R	675	2013										
STREET TRIPLE	675	2007-2012		WK094L / WK094R		STX94					HO22RID	HO22RI
STREET TRIPLE	675	2013		WK122L / WK122R							WF7519	
STREET TRIPLE	675	2014		WK122L / WK122R							WF7519	
STREET TRIPLE R	675	2009-2012		WK094L / WK094R		STX94					HO22RID	HO22RI
STREET TRIPLE R	675	2013-2014		WK122L / WK122R							WF7519	
DAYTONA	750	1991-1993										
TRIDENT	750	1991-1996										
BONNEVILLE	800	2001-2006		WK128L			TR03FLD	RL7008			TR03RID	RF7539
SPEEDMASTER	800	2003-2004										
TIGER	800	2010			BY103L / BY103R		WL108L / WL108R	RL7007			WF7515	RF7522
TIGER	800	2011-2012			BY103L / BY103R		WL108L / WL108R	RL7007			WF7515	RF7522
TIGER	800	2013-2014			BY103L / BY103R		WL108L / WL108R	RL7007			WF7515	RF7522
TIGER ABS	800	2011-2012			BY103L / BY103R		WL108L / WL108R	RL7007			WF7515	RF7522
TIGER ABS	800	2013-2014			BY103L / BY103R		WL108L / WL108R	RL7007			WF7515	RF7522
TIGER XC	800	2010-2011					WL108L / WL108R	RL7007			WF7515	RF7522
TIGER XC	800	2012-2014					WL108L / WL108R	RL7007			WF7515	RF7522
TIGER XC ABS	800	2010-2014					WL108L / WL108R	RL7007			WF7515	RF7522
BONNEVILLE	865	2007-2009		WK124L							TR03RID	RF7539
BONNEVILLE	865	2010-2011		WK124L							TR03RID	RF7539
BONNEVILLE	865	2012-2013		WK124L							TR03RID	RF7539
BONNEVILLE SE	865	2009-2011		WK124L							TR03RID	RF7539
BONNEVILLE- T100	865	2005-2009		WK128L			TR03FLD	RL7008			TR03RID	RF7539
BONNEVILLE- T100	865	2010-2012									TR03RID	RF7539
BONNEVILLE- T100	865	2013		WK128L			TR03FLD	RL7008			TR03RID	RF7539
SCRAMBLER	865	2006-2009		WK128L			TR03FLD	RL7008			TR03RID	RF7539
SCRAMBLER	865	2010-2013									TR03RID	RF7539
SPEEDMASTER	865	2005-2011										
SPEEDMASTER	865	2012-2013		WK124L								
THRUXTON	865	2004-2014		WK129L							TR03RID	RF7539
ADVENTURER	900	1996-2001		WK129L / WK129R								
DAYTONA	900	1994-1996										
DAYTONA SUPER III	900	1994-1996										
SPEED TRIPLE T309	900	1994-1997										
SPEED TRIPLE T509	900	1997-1998		WK029L / WK029R		STX29					HO22RID	HO22RI
SPRINT	900	1994-1998										
TIGER	900	1993-1998							HO22FID	HO22FI		
TIGER	900	1999-2000										
TRIDENT	900	1991-1996										
TROPHY	900	1991-1995										
TROPHY	900	1996-2000										
DAYTONA T595	950	1996-1998		WK029L / WK029R		STX29					HO22RID	HO22RI
DAYTONA T955i	955	1999-2001		WK029L / WK029R		STX29					HO22RID	HO22RI
DAYTONA T955i	955	2002-2006		WK061L / WK061R		STX61					HO22RID	HO22RI
SPEED TRIPLE T955	955	1999-2001		WK029L / WK029R		STX29					HO22RID	HO22RI
SPEED TRIPLE T955	955	2002-2004		WK061L / WK061R		STX61					HO22RID	HO22RI
SPRINT RS	955	2000-2004		WK029L / WK029R		STX29					TR03RID	RF7539
SPRINT ST	955	1998-2004		WK029L / WK029R		STX29					TR03RID	RF7539
TIGER	955	2001-2004										
TIGER	955	2005-2006										
DAYTONA	1000	1991-1995										
SPEED TRIPLE	1050	2005-2007		WK083L / WK083R		STX83					HO22RID	HO22RI
SPEED TRIPLE	1050	2008-2010		WK102L / WK102R				RL7011			HO22RID	HO22RI
SPEED TRIPLE	1050	2011		WK102L / WK102R				RL7011			TR03RID	RF7539
SPEED TRIPLE	1050	2012-2013		WK102L / WK102R							TR03RID	RF7539
SPEED TRIPLE ABS	1050	2011		WK102L / WK102R				RL7011			WF7515	
SPEED TRIPLE R	1050	2012-2014		WK119L / WK119R							WF7515	
SPEED TRIPLE R ABS	1050	2012-2014		WK119L / WK119R							WF7515	
SPRINT GT ABS	1050	2010-2014		WK102L / WK102R							WF7515	
SPRINT ST T1050	1050	2005-2008		WK061L / WK061R		STX61					TR03RID	RF7539
SPRINT ST T1050	1050	2009-2011				STX61					TR03RID	RF7539
SPRINT ST T1050 ABS	1050	2005-2008										
TIGER	1050	2007-2011		WK083L / WK083R		STX83					TR03RID	RF7539

STRADA / ONROAD

PASTIGLIE / PADS						LEVE / LEVERS	KIT MAGGIORAZIONE OVERSIZE KIT			
ANTERIORE FRONT				POSTERIORE REAR		ANTERIORE FRONT	ANTERIORE FRONT			
P1R	CM66	CM55	SM1	CM56	SM1	LE*	OKI	MODELLO / MODEL	CC	ANNO / YEAR
	941CM66	941CM55		711CM56	711SM1			DAYTONA	675	2013
P1R930	930CM66	930CM55		711CM56	711SM1			DAYTONA R	675	2011
P1R930	930CM66	930CM55		711CM56	711SM1			DAYTONA R	675	2012
P1R930	930CM66	930CM55		711CM56	711SM1			DAYTONA R	675	2013
		716CM55		711CM56	711SM1			STREET TRIPLE	675	2007-2012
		716CM55		711CM56	711SM1			STREET TRIPLE	675	2013
		716CM55		711CM56	711SM1			STREET TRIPLE	675	2014
		906CM55		711CM56	711SM1			STREET TRIPLE R	675	2009-2012
		906CM55		711CM56	711SM1			STREET TRIPLE R	675	2013-2014
		707CM55			725SM1			DAYTONA	750	1991-1993
			696SM1 / 725SM1		725SM1			TRIDENT	750	1991-1996
		716CM55		696CM56	696SM1			BONNEVILLE	800	2001-2006
		720CM55	720SM1	696CM56	696SM1			SPEEDMASTER	800	2003-2004
		716CM55		711CM56	711SM1			TIGER	800	2010
		716CM55		711CM56	711SM1			TIGER	800	2011-2012
		716CM55		711CM56	711SM1			TIGER	800	2013-2014
		716CM55		711CM56	711SM1			TIGER ABS	800	2011-2012
		716CM55		711CM56	711SM1			TIGER ABS	800	2013-2014
		716CM55		711CM56	711SM1			TIGER XC	800	2010-2011
		716CM55		711CM56	711SM1			TIGER XC	800	2012-2014
		716CM55		711CM56	711SM1			TIGER XC ABS	800	2010-2014
		716CM55		696CM56	696SM1			BONNEVILLE	865	2007-2009
		716CM55		696CM56	696SM1			BONNEVILLE	865	2010-2011
		716CM55		696CM56	696SM1			BONNEVILLE	865	2012-2013
		716CM55		696CM56	696SM1			BONNEVILLE SE	865	2009-2011
		716CM55		696CM56	696SM1			BONNEVILLE- T100	865	2005-2009
		716CM55		696CM56	696SM1			BONNEVILLE- T100	865	2010-2012
		716CM55		696CM56	696SM1			BONNEVILLE- T100	865	2013
		716CM55		696CM56	696SM1			SCRAMBLER	865	2006-2009
		716CM55		696CM56	696SM1			SCRAMBLER	865	2010-2013
		716CM55		696CM56	696SM1			SPEEDMASTER	865	2005-2011
		716CM55		696CM56	696SM1			SPEEDMASTER	865	2012-2013
		716CM55		696CM56	696SM1			THRUXTON	865	2004-2014
		716CM55		720CM56	720SM1			ADVENTURER	900	1996-2001
		707CM55			725SM1			DAYTONA	900	1994-1996
					725SM1			DAYTONA SUPER III	900	1994-1996
		707CM55			725SM1			SPEED TRIPLE T309	900	1994-1997
		707CM55		696CM56	696SM1			SPEED TRIPLE T509	900	1997-1998
		707CM55			725SM1			SPRINT	900	1994-1998
			696SM1 / 725SM1		725SM1			TIGER	900	1993-1998
		716CM55			716SM1			TIGER	900	1999-2000
			696SM1 / 725SM1		725SM1			TRIDENT	900	1991-1996
			696SM1 / 725SM1		725SM1			TROPHY	900	1991-1995
		707CM55			725SM1			TROPHY	900	1996-2000
		707CM55		696CM56	696SM1			DAYTONA T595	950	1996-1998
		707CM55		696CM56	696SM1			DAYTONA T955i	955	1999-2001
		707CM55		696CM56	696SM1			DAYTONA T955i	955	2002-2006
		707CM55		696CM56	696SM1			SPEED TRIPLE T955	955	1999-2001
		707CM55		696CM56	696SM1			SPEED TRIPLE T955	955	2002-2004
		707CM55			725SM1			SPRINT RS	955	2000-2004
		707CM55		696CM56	696SM1			SPRINT ST	955	1998-2004
		716CM55			716SM1			TIGER	955	2001-2004
		716CM55			725SM1			TIGER	955	2005-2006
		707CM55			725SM1			DAYTONA	1000	1991-1995
		906CM55		696CM56	696SM1			SPEED TRIPLE	1050	2005-2007
	870CM66	870CM55		696CM56	696SM1			SPEED TRIPLE	1050	2008-2010
	870CM66	870CM55		696CM56	696SM1			SPEED TRIPLE	1050	2011
	870CM66	870CM55		696CM56	696SM1			SPEED TRIPLE	1050	2012-2013
	870CM66	870CM55		696CM56	696SM1			SPEED TRIPLE ABS	1050	2011
P1R930	930CM66	930CM55		696CM56	696SM1			SPEED TRIPLE R	1050	2012-2014
P1R930	930CM66	930CM55		696CM56	696SM1			SPEED TRIPLE R ABS	1050	2012-2014
		707CM55			725SM1			SPRINT GT ABS	1050	2010-2014
		707CM55		696CM56	696SM1			SPRINT ST T1050	1050	2005-2008
		707CM55		696CM56	696SM1			SPRINT ST T1050	1050	2009-2011
		707CM55		696CM56	696SM1			SPRINT ST T1050 ABS	1050	2005-2008
		906CM55			725SM1			TIGER	1050	2007-2011

* articolo in esaurimento / to be discontinued

STRADA / ONROAD

			DISCHI / DISKS									
			ANTERIORE / FRONT								POSTERIORE / REAR	
MODELLO / MODEL	CC	ANNO / YEAR	BATFLY STRADA	SK2	BATFLY ENDURO	R-STX	W-FLO	R-FLO	W-FIX	R-FIX	W-FIX	R-FIX
TIGER ABS	1050	2007-2013		WK083L / WK083R		STX83					TR03RID	RF7539
DAYTONA	1200	1991-1997										
TIGER EXPLORER	1200	2012-2014			BY103L / BY103R		WL108L / WL108R	RL7007				
TIGER EXPLORER XC	1200	2013-2014			BY103L / BY103R		WL108L / WL108R	RL7007				
TROPHY	1200	1991-1995										
TROPHY	1200	1996-2003										
VOXAN												
BLACK MAGIC	995	2006		WK001L / WK001R		STX01						
CAFE RACER	995	2000-2006		WK001L / WK001R		STX01						
ROADSTER	995	2001-2006		WK001L / WK001R		STX01						
SCRAMBLER	995	2002-2006										
YAMAHA												
DT LCD	50	1996										
DT R	50	1994-1995										
DT R	50	2004										
DTR MX	50	1989										
TDR	50	1990										
TZM R	50	1994										
TZR	50	2003-2006										
TZR	50	2007-2011										
TZR R	50	1993-2002								YA03FI		
YSR	50	1986-1989										
YZR	50	1987-1990										
YSR	60	1986-1988										
DT LC-2 (53V/D482)	80	1985-1993										
RD	80	1985-1986										
RD	80	1987-1990										
TDR	80	1989										
TZR	80	1987										
DT	125	1984										
DT LC	125	1985-1988										
DT LC BELGARDA	125	1986-1990										
DT R	125	1988-2003							YA06FID	YA06FI	YA01RID	YA01RI
DT TENERE BELGARDA	125	1987										
DT X SM	125	2005										
DTZ TENERE	125	1989-1994							YA06FID	YA06FI		
RD LC	125	1982-1984										
RD LC	125	1985-1987										
SR	125	1997-2002							YA09RID	YA09RI		
TDR (Italian model)	125	1989-1999		WK001L / WK001R		STX01					YA01RID	YA01RI
TDR (Japanese model)	125	1989							YA05FID	YA05FI		
TW (Rear Drum Model)	125	1999-2004							YA39FID	YA39FI		
TZ COMPETITION	125	1994-1995										
TZ COMPETITION	125	1996-1997		WK015L / WK015R		STX15						
TZR	125	1987-1988										
TZR	125	1989-1992		WK001L / WK001R		STX01						
TZR	125	1993										
TZR	125	1994										
XT R	125	2005-2009										
YBR	125	2005-2006										
YZF R	125	2008-2013							WF7101	RF7112	WF7509	RF7540
RT	180	1990-1997										
DT	200	1984-1988										
DT R	200	1989-1991										
SDR	200	1987-1990										
TW	200	2001-2008										
SEROW	225	2005-2006							YA39FID	YA39FI		
TW	225	2005-2006							YA39FID	YA39FI		
XT	225	2001-2007										
XT SEROW	225	1992-2000										
FZ FAZER	250	1985-1986										
FZR	250	1987-1988										
FZR R	250	1989										
FZX ZEAL	250	1991		WK001R		STX01						
R1-Z	250	1997		WK015L / WK015R		STX15						
RD LC	250	1983-1986										

STRADA / ONROAD

PASTIGLIE / PADS						LEVE / LEVERS	KIT MAGGIORAZIONE OVERSIZE KIT			
ANTERIORE FRONT				POSTERIORE REAR		ANTERIORE FRONT	ANTERIORE FRONT			
P1R	CM66	CM55	SM1	CM56	SM1	LE*	OKI	MODELLO / MODEL	CC	ANNO / YEAR
		906CM55			725SM1			TIGER ABS	1050	2007-2013
		707CM55			725SM1			DAYTONA	1200	1991-1997
		707CM55		696CM56	696SM1			TIGER EXPLORER	1200	2012-2014
		707CM55		696CM56	696SM1			TIGER EXPLORER XC	1200	2013-2014
			696SM1 / 725SM1		725SM1			TROPHY	1200	1991-1995
		707CM55			725SM1			TROPHY	1200	1996-2003
								VOXAN		
	784CM66	784CM55						BLACK MAGIC	995	2006
	784CM66	784CM55						CAFE RACER	995	2000-2006
	784CM66	784CM55						ROADSTER	995	2001-2006
			748SM1		725SM1			SCRAMBLER	995	2002-2006
								YAMAHA		
			705SM1					DT LCD	50	1996
			685SM1					DT R	50	1994-1995
			621SM1					DT R	50	2004
			685SM1					DTR MX	50	1989
			685SM1		685SM1			TDR	50	1990
			725SM1		685SM1			TZM R	50	1994
					621SM1			TZR	50	2003-2006
			770SM1		621SM1			TZR	50	2007-2011
			725SM1		685SM1			TZR R	50	1993-2002
			685SM1					YSR	50	1986-1989
			685SM1					YZR	50	1987-1990
			685SM1					YSR	60	1986-1988
			685SM1					DT LC-2 (53V/D482)	80	1985-1993
			658SM1					RD	80	1985-1986
			685SM1					RD	80	1987-1990
			685SM1		685SM1			TDR	80	1989
			679SM1					TZR	80	1987
			669SM1					DT	125	1984
			685SM1					DT LC	125	1985-1988
			684SM1					DT LC BELGARDA	125	1986-1990
			685SM1		685SM1			DT R	125	1988-2003
			684SM1					DT TENERE BELGARDA	125	1987
		780CM55	780SM1		722SM1			DT X SM	125	2005
					728SM1			DTZ TENERE	125	1989-1994
			658SM1					RD LC	125	1982-1984
			679SM1					RD LC	125	1985-1987
		777CM55	777SM1					SR	125	1997-2002
					669SM1			TDR (Italian model)	125	1989-1999
								TDR (Japanese model)	125	1989
			822SM1					TW (Rear Drum Model)	125	1999-2004
		707CM55	707SM1					TZ COMPETITION	125	1994-1995
		707CM55	707SM1					TZ COMPETITION	125	1996-1997
			679SM1					TZR	125	1987-1988
			661SM1		679SM1			TZR	125	1989-1992
		777CM55	777SM1		661SM1			TZR	125	1993
P1R786	786CM66	786CM55	786SM1		661SM1			TZR	125	1994
			878SM1		878SM1			XT R	125	2005-2009
			685SM1					YBR	125	2005-2006
		746CM55	746SM1		923SM1			YZF R	125	2008-2013
			685SM1					RT	180	1990-1997
			685SM1					DT	200	1984-1988
			685SM1		685SM1			DT R	200	1989-1991
			679SM1		679SM1			SDR	200	1987-1990
			822SM1					TW	200	2001-2008
			822SM1					SEROW	225	2005-2006
			822SM1					TW	225	2005-2006
			822SM1					XT	225	2001-2007
			685SM1					XT SEROW	225	1992-2000
			661SM1					FZ FAZER	250	1985-1986
			692SM1		679SM1			FZR	250	1987-1988
		707CM55	707SM1		679SM1			FZR R	250	1989
			750SM1		679SM1			FZX ZEAL	250	1991
			692SM1		679SM1			R1-Z	250	1997
			658SM1		661SM1			RD LC	250	1983-1986

* articolo in esaurimento / to be discontinued

STRADA / ONROAD

			DISCHI / DISKS									
			ANTERIORE / FRONT								POSTERIORE / REAR	
MODELLO / MODEL	CC	ANNO / YEAR	BATFLY STRADA	SK2	BATFLY ENDURO	R-STX	W-FLO	R-FLO	W-FIX	R-FIX	W-FIX	R-FIX
SEROW	250	2005-2006										
SRV (Rear Drum Model)	250	1992-1997							YA05FID	YA05FI		
TDR	250	1988		WK001R								
TDR	250	1989-1992		WK001R		STX01						
TRICKER	250	2005-2006							YA39FID	YA39FI		
TY	250	1993										
TZ	250	1985-1987										
TZ COMPETITION	250	1988										
TZ COMPETITION	250	1990-1991										
TZ GP	250	1992-1995										
TZ GP	250	1996-1997		WK015L / WK015R		STX15						
TZR	250	1985-1987										
TZR	250	1989-1992		WK001L / WK001R		STX01						
XT X	250	2005-2006										
YBR	250	2007-2011										
RD F	350	1985										
RD LC	350	1983-1984							YA09RID	YA09RI	YA09RID	YA09RI
RD LC	350	1985							YA09RID	YA09RI	YA09RID	YA09RI
RD LC	350	1986-1993							YA09RID	YA09RI	YA09RID	YA09RI
XT	350	1985-1996										
FZ R	400	1985-1987										
FZR R	400	1988-1990										
SR	400	2014										
SRX	400	1991		WK001L		STX01					YA08RID	YA08RI
XJR	400	1995-2000		WK015L / WK015R		STX15					YA08RID	YA08RI
XS	400	1982-1985										
XS Z	400	1983-1985										
RD LC	500	1984-1988							YA09RID	YA09RI		YA03RI
XZ R	550	1982-1984										
FZ	600	1987-1988										
FZ6	600	2004-2008		WK046L / WK046R		STX46	WL704L / WL704R				YA44RID	YA44RI
FZ6 Fazer	600	2004-2008		WK046L / WK046R		STX46	WL704L / WL704R				YA44RID	YA44RI
FZ6 FAZER S2	600	2007-2008		WK046L / WK046R		STX46	WL704L / WL704R				YA44RID	YA44RI
FZ6 S2	600	2007-2008		WK046L / WK046R		STX46	WL704L / WL704R				YA44RID	YA44RI
FZ6R	600	2009										
FZR	600	1989		WK015L / WK015R		STX15					YA08RID	YA08RI
FZR R	600	1990-1991		WK015L / WK015R		STX15					YA08RID	YA08RI
FZR R	600	1992-1995		WK015L / WK015R		STX15					YA08RID	YA08RI
FZS FAZER	600	1998-2003		WK015L / WK015R		STX15					YA08RID	YA08RI
SRX	600	1986-1987										
SRX	600	1988-1989										
SRX	600	1990										
XJ	600	1983-1991							YA09RID	YA09RI	YA09RID	YA09RI
XJ N	600	1991-1997								YA19FI	YA08RID	YA08RI
XJ N	600	1998-2003		WK021L / WK021R		STX21	WL709L / WL709R	YA21FL			YA08RID	YA08RI
XJ S DIVERSION	600	1991-1997								YA19FI	YA08RID	YA08RI
XJ S DIVERSION	600	1998-2003		WK021L		STX21	WL709L	YA21FL			YA08RID	YA08RI
XJ6	600	2009-2011		WK046L / WK046R		STX46	WL704L / WL704R					
XJ6 DIVERSION	600	2009-2011		WK046L / WK046R		STX46	WL704L / WL704R					
XT	600	1987-1990								YA02FI		YA02RI
XT 4 VALVES	600	1984-1985										
XT 4 VALVES	600	1986-1987								YA02FI		
XT 4 VALVES	600	1988-1989								YA02FI		YA02RI
XT E	600	1990-1994								YA02FI		YA02RI
XT E	600	1995-2003								YA17FI		YA02RI
XT TENERE	600	1983-1985										
XT Z TENERE	600	1986								YA02FI		
XT Z TENERE	600	1987-1991								YA02FI		YA02RI
YZF R THUNDERCAT	600	1996-2004		WK021L / WK021R		STX21					YA08RID	YA08RI
YZF R6	600	1999-2002		WK021L / WK021R		STX21					YA24RID	YA24RI
YZF R6	600	2003-2004		WK046L / WK046R		STX46					YA34RID	YA34RI
YZF R6	600	2005-2011	BY711L / BY711R	WK111L / WK111R		STX78					YA34RID	YA34RI
YZF R6	600	2012-2014	BY711L / BY711R	WK111L / WK111R		STX78					YA34RID	YA34RI
XJ TURBO	650	1981-1985										
MT03	660	2006-2011		WK046L / WK046R		STX46	WL704L / WL704R				YA44RID	YA44RI
SZR	660	1995-2001		WK001R		STX01						
XT R	660	2004-2014					YA47FLD	RL7009			YA47RID	RF7541

STRADA / ONROAD

	PASTIGLIE / PADS						LEVE / LEVERS	KIT MAGGIORAZIONE OVERSIZE KIT			
	ANTERIORE FRONT				POSTERIORE REAR		ANTERIORE FRONT	ANTERIORE FRONT			
MODELLO / MODEL	P1R	CM66	CM55	SM1	CM56	SM1	LE*	OKI	MODELLO / MODEL	CC	ANNO / YEAR
SEROW				822SM1		722SM1			SEROW	250	2005-2006
SRV (Rear Drum Model)				750SM1					SRV (Rear Drum Model)	250	1992-1997
TDR				692SM1		679SM1			TDR	250	1988
TDR				692SM1		679SM1			TDR	250	1989-1992
TRICKER				822SM1		722SM1			TRICKER	250	2005-2006
TY				621SM1		621SM1			TY	250	1993
TZ				692SM1		679SM1			TZ	250	1985-1987
TZ COMPETITION				679SM1					TZ COMPETITION	250	1988
TZ COMPETITION			707CM55	707SM1					TZ COMPETITION	250	1990-1991
TZ GP			707CM55	707SM1					TZ GP	250	1992-1995
TZ GP			707CM55	707SM1					TZ GP	250	1996-1997
TZR				692SM1		679SM1			TZR	250	1985-1987
TZR				679SM1					TZR	250	1989-1992
XT X				822SM1		722SM1			XT X	250	2005-2006
YBR				725SM1					YBR	250	2007-2011
RD F				679SM1		679SM1			RD F	350	1985
RD LC				658SM1		661SM1			RD LC	350	1983-1984
RD LC				661SM1		679SM1			RD LC	350	1985
RD LC				679SM1		679SM1			RD LC	350	1986-1993
XT				685SM1					XT	350	1985-1996
FZ R				661SM1		679SM1			FZ R	400	1985-1987
FZR R				692SM1		679SM1			FZR R	400	1988-1990
SR				750SM1					SR	400	2014
SRX				692SM1		661SM1			SRX	400	1991
XJR		784CM66	784CM55			661SM1			XJR	400	1995-2000
XS				658SM1					XS	400	1982-1985
XS Z				661SM1		661SM1			XS Z	400	1983-1985
RD LC				661SM1		679SM1			RD LC	500	1984-1988
XZ R				658SM1					XZ R	550	1982-1984
FZ				661SM1		679SM1			FZ	600	1987-1988
FZ6			777CM55		742CM56	742SM1			FZ6	600	2004-2008
FZ6 Fazer			777CM55		742CM56	742SM1			FZ6 Fazer	600	2004-2008
FZ6 FAZER S2	P1R786	786CM66	786CM55		742CM56	742SM1			FZ6 FAZER S2	600	2007-2008
FZ6 S2	P1R786	786CM66	786CM55		742CM56	742SM1			FZ6 S2	600	2007-2008
FZ6R			777CM55		742CM56	742SM1			FZ6R	600	2009
FZR				661SM1		661SM1			FZR	600	1989
FZR R				729SM1		661SM1			FZR R	600	1990-1991
FZR R				751SM1		661SM1			FZR R	600	1992-1995
FZS FAZER	P1R786	786CM66	786CM55			679SM1			FZS FAZER	600	1998-2003
SRX				679SM1		679SM1			SRX	600	1986-1987
SRX				692SM1		679SM1			SRX	600	1988-1989
SRX						679SM1			SRX	600	1990
XJ				661SM1		661SM1			XJ	600	1983-1991
XJ N				750SM1		679SM1			XJ N	600	1991-1997
XJ N			777CM55			679SM1			XJ N	600	1998-2003
XJ S DIVERSION				750SM1		679SM1			XJ S DIVERSION	600	1991-1997
XJ S DIVERSION			777CM55			679SM1			XJ S DIVERSION	600	1998-2003
XJ6			777CM55		742CM56	742SM1			XJ6	600	2009-2011
XJ6 DIVERSION			777CM55		742CM56	742SM1			XJ6 DIVERSION	600	2009-2011
XT				683SM1		685SM1			XT	600	1987-1990
XT 4 VALVES				658SM1					XT 4 VALVES	600	1984-1985
XT 4 VALVES				683SM1					XT 4 VALVES	600	1986-1987
XT 4 VALVES				683SM1		685SM1			XT 4 VALVES	600	1988-1989
XT E				737SM1		685SM1			XT E	600	1990-1994
XT E				737SM1		685SM1			XT E	600	1995-2003
XT TENERE				658SM1					XT TENERE	600	1983-1985
XT Z TENERE				683SM1					XT Z TENERE	600	1986
XT Z TENERE				683SM1		685SM1			XT Z TENERE	600	1987-1991
YZF R THUNDERCAT	P1R786	786CM66	786CM55			661SM1			YZF R THUNDERCAT	600	1996-2004
YZF R6	P1R786	786CM66	786CM55		822CM56	822SM1			YZF R6	600	1999-2002
YZF R6	P1R786	786CM66	786CM55		742CM56	742SM1			YZF R6	600	2003-2004
YZF R6	P1R786	786CM66	786CM55		742CM56	742SM1		0KWK07	YZF R6	600	2005-2011
YZF R6	P1R786	786CM66	786CM55		742CM56	742SM1			YZF R6	600	2012-2014
XJ TURBO				658SM1					XJ TURBO	650	1981-1985
MT03			777CM55		773CM56	773SM1			MT03	660	2006-2011
SZR		688CM66	688CM55		612CM56	612SM1			SZR	660	1995-2001
XT R			780CM55		773CM56	773SM1			XT R	660	2004-2014

* articolo in esaurimento / to be discontinued

STRADA / ONROAD

			DISCHI / DISKS									
			ANTERIORE / FRONT								POSTERIORE / REAR	
MODELLO / MODEL	CC	ANNO / YEAR	BATFLY STRADA	SK2	BATFLY ENDURO	R-STX	W-FLO	R-FLO	W-FIX	R-FIX	W-FIX	R-FIX
XT X	660	2004-2014		WK074L		STX74					YA47RID	RF7541
XTZ TENERE	660	1991-1998								YA17FI		YA02RI
XTZ TENERE	660	2008-2013					YA47FLD	RL7009			YA47RID	RF7541
FZ	700	1987-1989										
FZX FAZER	700	1987-1988										
MT-07	700	2014										
FZ GENESIS	750	1987-1988							YA09RID	YA09RI	YA09RID	YA09RI
FZ GENESIS	750	1989-1992		WK015L / WK015R		STX15					YA09RID	YA09RI
FZR R	750	1989-1992		WK001L / WK001R		STX01						
FZR R GENESIS	750	1987-1988										
FZX FAZER	750	1986-1990							YA09RID	YA09RI	YA09RID	YA09RI
XJ	750	1983-1988										
XTZ SUPER TENERE	750	1989-2000								YA03FI		YA03RI
YZF R	750	1993-1997		WK001L / WK001R		STX01					YA08RID	YA08RI
YZF R7	750	1999-2001		WK033L / WK033R		STX33					YA08RID	YA08RI
YZF SP	750	1993-1997		WK001L / WK001R		STX01					YA08RID	YA08RI
FAZER 8	800	2010-2012		WK111L / WK111R		STX78	WL708L / WL708R				WF7511	RF7542
FZ8	800	2010-2013		WK111L / WK111R		STX78	WL708L / WL708R				WF7511	RF7542
MT-09	850	2014		WK046L / WK046R		STX46					WF7526	RF7549
MT-09 ABS	850	2014		WK046L / WK046R		STX46					WF7526	RF7549
MT-09 STREET RALLY	850	2014										
TDM	850	1991-1995		WK015L / WK015R		STX15					YA08RID	YA08RI
TDM	850	1996-2001		WK015L / WK015R		STX15					YA08RID	YA08RI
TRX	850	1995-2000		WK015L / WK015R		STX15					YA08RID	YA08RI
TDM	900	2002-2014		WK021L / WK021R		STX21					YA08RID	YA08RI
XJ	900	1983-1990										
XJ S DIVERSION	900	1994-1996									YA09RID	YA09RI
FZ1	1000	2006-2014		WK071L / WK071R		STX71	WL702L / WL702R				YA44RID	YA44RI
FZ1 FAZER	1000	2006-2012		WK071L / WK071R		STX71	WL702L / WL702R				YA44RID	YA44RI
FZ1 FAZER ABS	1000	2007-2012		WK071L / WK071R		STX71	WL702L / WL702R				YA44RID	YA44RI
FZR EXUP	1000	1990-1991		WK001L / WK001R		STX01					YA09RID	YA09RI
FZR EXUP	1000	1992-1993		WK001L / WK001R		STX01					YA09RID	YA09RI
FZR EXUP	1000	1994-1995		WK001L / WK001R		STX01					YA09RID	YA09RI
FZR GENESIS	1000	1987-1989		WK001L / WK001R		STX01					YA09RID	YA09RI
FZS FAZER	1000	2001-2005		WK021L / WK021R		STX21					YA09RID	YA09RI
GTS	1000	1993-1996									YA05FID	YA05FI
YZF R THUNDERACE	1000	1996-1998		WK021L / WK021R		STX21					YA08RID	YA08RI
YZF R1	1000	1998-2001		WK021L / WK021R		STX21					YA08RID	YA08RI
YZF R1	1000	2002-2003		WK021L / WK021R		STX21					YA24RID	YA24RI
YZF R1	1000	2004-2006		WK071L / WK071R		STX71					YA34RID	YA34RI
YZF R1	1000	2007-2008	BY778L / BY778R	WK078L / WK078R		STX78					YA34RID	YA34RI
YZF R1	1000	2009-2011	BY778L / BY778R	WK078L / WK078R		STX78					YA34RID	YA34RI
YZF R1	1000	2012-2014	BY778L / BY778R	WK078L / WK078R							YA34RID	YA34RI
YZF R1 SP	1000	2006										
BT BULLDOG	1100	2002-2006		WK021L / WK021R		STX21					YA09RID	YA09RI
FJ	1100	1984-1985							YA05FID	YA05FI	YA05FID	YA05FI
FJ	1200	1986-1987							YA05FID	YA05FI	YA05FID	YA05FI
FJ	1200	1988-1995		WK015L / WK015R		STX15					YA05FID	YA05FI
FJ ABS	1200	1991-1993									YA05FID	YA05FI
V MAX	1200	1986-1992							YA05FID	YA05FI	YA05FID	YA05FI
V MAX	1200	1993-2006						YA21FL			YA05FID	YA05FI
XJR	1200	1995-1996		WK001L / WK001R		STX01					YA09RID	YA09RI
XJR	1200	1997		WK001L / WK001R		STX01					YA09RID	YA09RI
XT Z SUPER TENERE	1200	2010-2014		WK111L / WK111R	BY105L / BY105R	STX78	WL104L / WL104R				WF7510	RF7523
XT ZE SUPER TENERE	1200	2014		WK111L / WK111R	BY105L / BY105R	STX78	WL104L / WL104R				WF7510	RF7523
FJR	1300	2001-2004		WK021L / WK021R		STX21					YA05FID	YA05FI
FJR ABS	1300	2003-2005		WK033L / WK033R		STX33					YA05FID	YA05FI
FJR ABS	1300	2006-2013		WK033L / WK033R		STX33					YA05FID	YA05FI
XJR	1300	1998		WK001L / WK001R		STX01					YA09RID	YA09RI
XJR	1300	1999-2001		WK021L / WK021R		STX21	WL709L / WL709R				YA09RID	YA09RI
XJR	1300	2002-2013		WK021L / WK021R		STX21	WL709L / WL709R				YA09RID	YA09RI
MT01	1670	2005-2006		WK033L / WK033R		STX33					YA09RID	YA09RI
MT01	1670	2007-2011									YA09RID	YA09RI
V MAX	1700	2009-2012										
XV PC ROAD STAR WARRIOR	1700	2002-2007		WK021L / WK021R		STX21						

STRADA / ONROAD

PASTIGLIE / PADS						LEVE / LEVERS	KIT MAGGIORAZIONE OVERSIZE KIT			
ANTERIORE FRONT				POSTERIORE REAR		ANTERIORE FRONT	ANTERIORE FRONT			
P1R	CM66	CM55	SM1	CM56	SM1	LE*	OKI	MODELLO / MODEL	CC	ANNO / YEAR
	784CM66	784CM55		773CM56	773SM1			XT X	660	2004-2014
			737SM1		685SM1			XTZ TENERE	660	1991-1998
		746CM55		773CM56	773SM1			XTZ TENERE	660	2008-2013
			661SM1					FZ	700	1987-1989
			661SM1		661SM1			FZX FAZER	700	1987-1988
P1R786	786CM66	786CM55		742CM56	742SM1			MT-07	700	2014
			661SM1		661SM1			FZ GENESIS	750	1987-1988
			692SM1		661SM1			FZ GENESIS	750	1989-1992
		707CM55			661SM1			FZR R	750	1989-1992
			692SM1		661SM1			FZR R GENESIS	750	1987-1988
			661SM1		661SM1			FZX FAZER	750	1986-1990
			661SM1		661SM1			XJ	750	1983-1988
			696SM1 / 725SM1		725SM1			XTZ SUPER TENERE	750	1989-2000
					661SM1			YZF R	750	1993-1997
P1R786	786CM66	786CM55		826CM56	826SM1			YZF R7	750	1999-2001
					661SM1			YZF SP	750	1993-1997
P1R786	786CM66	786CM55		742CM56	742SM1			FAZER 8	800	2010-2012
P1R786	786CM66	786CM55		742CM56	742SM1			FZ8	800	2010-2013
P1R786	786CM66			742CM56				MT-09	850	2014
P1R786	786CM66			742CM56				MT-09 ABS	850	2014
P1R786	786CM66			742CM56				MT-09 STREET RALLY	850	2014
			692SM1		661SM1			TDM	850	1991-1995
			729SM1		661SM1			TDM	850	1996-2001
	784CM66	784CM55			661SM1			TRX	850	1995-2000
P1R786	786CM66	786CM55			903SM1			TDM	900	2002-2014
			661SM1		661SM1			XJ	900	1983-1990
			750SM1		661SM1			XJ S DIVERSION	900	1994-1996
P1R786	786CM66	786CM55		742CM56	742SM1			FZ1	1000	2006-2014
P1R786	786CM66	786CM55		742CM56	742SM1			FZ1 FAZER	1000	2006-2012
P1R786	786CM66	786CM55		742CM56	742SM1			FZ1 FAZER ABS	1000	2007-2012
			729SM1		661SM1			FZR EXUP	1000	1990-1991
			751SM1		661SM1			FZR EXUP	1000	1992-1993
					661SM1			FZR EXUP	1000	1994-1995
			692SM1		661SM1			FZR GENESIS	1000	1987-1989
P1R786	786CM66	786CM55						FZS FAZER	1000	2001-2005
					661SM1			GTS	1000	1993-1996
P1R786	786CM66	786CM55			661SM1			YZF R THUNDERACE	1000	1996-1998
P1R786	786CM66	786CM55		826CM56	826SM1	LE1007* / LE1058* / LE2007* / LE2058*		YZF R1	1000	1998-2001
P1R786	786CM66	786CM55		822CM56	822SM1	LE1007* / LE1057* / LE2007* / LE2057*		YZF R1	1000	2002-2003
P1R786	786CM66	786CM55		742CM56	742SM1	LE1007* / LE1012* / LE2007* / LE2012*		YZF R1	1000	2004-2006
P1R928	928CM66	928CM55		742CM56	742SM1	LE1007* / LE1012* / LE2007* / LE2012*	OKWK07	YZF R1	1000	2007-2008
P1R928	928CM66	928CM55		742CM56	742SM1	LE1007* / LE1056* / LE2007* / LE2056*	OKWK07	YZF R1	1000	2009-2011
P1R928	928CM66	928CM55		742CM56	742SM1			YZF R1	1000	2012-2014
P1R786	786CM66	786CM55		742CM56	742SM1			YZF R1 SP	1000	2006
P1R786	786CM66	786CM55						BT BULLDOG	1100	2002-2006
			661SM1		661SM1			FJ	1100	1984-1985
			661SM1		661SM1			FJ	1200	1986-1987
			692SM1		661SM1			FJ	1200	1988-1995
			692SM1		661SM1			FJ ABS	1200	1991-1993
			661SM1		661SM1			V MAX	1200	1986-1992
			729SM1		661SM1			V MAX	1200	1993-2006
			692SM1		661SM1			XJR	1200	1995-1996
	784CM66	784CM55			661SM1			XJR	1200	1997
P1R786	786CM66	786CM55			868SM1			XT Z SUPER TENERE	1200	2010-2014
P1R786	786CM66	786CM55			868SM1			XT ZE SUPER TENERE	1200	2014
P1R786	786CM66	786CM55			903SM1			FJR	1300	2001-2004
P1R786	786CM66	786CM55			903SM1			FJR ABS	1300	2003-2005
			830SM1		903SM1			FJR ABS	1300	2006-2013
	784CM66	784CM55			661SM1			XJR	1300	1998
P1R786	786CM66	786CM55			661SM1			XJR	1300	1999-2001
P1R786	786CM66	786CM55						XJR	1300	2002-2013
P1R786	786CM66	786CM55		748CM56	748SM1			MT01	1670	2005-2006
P1R928	928CM66	928CM55		748CM56	748SM1			MT01	1670	2007-2011
P1R928	928CM66	928CM55			903SM1			V MAX	1700	2009-2012
P1R786	786CM66	786CM55			903SM1			XV PC ROAD STAR WARRIOR	1700	2002-2007

OFFROAD / FUORISTRADA			DISCHI / DISKS										SUPPORTI PINZA BRACKETS CALIPER	
			ANTERIORE / FRONT							POSTERIORE / REAR			DISK Ø260	DISK Ø270
MODELLO MODEL	CC	ANNO YEAR	BATFLY ALUMINIUM Ø270	S3 BATFLY CROSS Ø270	W-FLO Ø270	S3 BATFLY CROSS Ø260	W-FLO Ø260	W-FIX ØOEM	R-FIX ØOEM	BATFLY	W-FIX / W-FULL	R-FIX	Per pinza originale / For oem caliper	Per pinza originale / For oem caliper
AGRATI G.														
TRIAL 323	323	1986-1987												
APRILIA														
RX	50	1989												
RX	50	1990												
RX	50	1991-1994												
RX	50	1995-2004												
RX	50	2006-2010												
RX RACING	50	2004-2006												
TUAREG RALLY	50	1991-1994												
RX	125	1986-1989												
RX	125	1990-1991												
RX	125	1992-2000												
TUAREG RALLY	125	1986-1988												
TUAREG RALLY	125	1989-1990												
TUAREG RALLY	125	1991-1994												
TUAREG WIND	125	1988-1989												
TUAREG WIND	125	1990-1991												
CLIMBER	250	1989-1992												
TUAREG RALLY	250	1986-1987												
CLIMBER 280 R	276	1993-1994												
TX 312	276	1987-1988												
Tuareg	350	1988-1989												
TUAREG WIND	350	1987-1989												
MXV	450	2009-2010									AP22RID			
RXV	450	2005-2011									AP22RID			
RXV	550	2005-2011									AP22RID			
TUAREG WIND	600	1988-1990												
BETA														
MX	50	1990-1994												
MX ENDURO	50	1992-1995												
RR (AJP cal.)	50	1998												
RR (Grimeca cal.)	50	1994-1997												
RR ENDURO	50	1999-2007												
RR ENDURO	50	2008-2014												
RR ENDURO Alu	50	1999-2004												
RR ENDURO FACTORY	50	2012-2014												
RR ENDURO STANDARD	50	2009-2014												
RR STANDARD	50	2005-2008												
SUPERTRIAL	50	1997												
EVO JUNIOR	80	2009-2014												
REV	80	2000-2007												
ALP 4T	125	2000-2005												
ALP 4T	125	2006-2014												
JONATHAN	125	1999												
RR	125	2006-2014												
SYNT	125	1994-1996												
TECHNO	125	1994												
TR 32	125	1986-1987												
TR 33	125	1987												
TR 34	125	1987-1989												
TR 35	125	1990-1993												
URBAN	125	2008-2014												
URBAN SPECIAL	125	2009-2014												
ZERO	125	1991-1992												
ALP 4T	200	2000-2005												
ALP 4T	200	2006-2014												
URBAN	200	2008-2014												
URBAN SPECIAL	200	2009-2014												
ALP	240	1992												
ALP	240	1996-1999												
TR 33	240	1986-1987												
TR 34-CAMPIONATO	240	1989												
TR 34-REPLICA	240	1987-1988												

PASTIGLIE / PADS			PASTIGLIE / PADS			KIT MAGGIORAZIONE OVERSIZE KIT		TRASFORMAZIONE MOTARD MOTARD TRASFORMATION					OFFROAD / FUORISTRADA		
ANTERIORE / FRONT			POSTERIORE / REAR			ANTERIORE FRONT	POSTERIORE REAR	DISCO DISK ANTERIORE FRONT	PASTIGLIE PADS ANTERIORE FRONT		PASTIGLIE PADS POSTERIORE REAR	SUPPORTO PINZA BRACKET CALIPER DISK Ø320			
CM46	CM44	SM1	CM46	CM44	SM1	OKI	OKI	SK2	CM66	CM55	SM1	Per pinza originale For oem caliper	MODELLO MODEL	CC	ANNO YEAR
													AGRATI G.		
		621SM1											TRIAL 323	323	1986-1987
													APRILIA		
		694SM1			648SM1						648SM1		RX	50	1989
		770SM1			648SM1						648SM1		RX	50	1990
		741SM1			648SM1						648SM1		RX	50	1991-1994
		770SM1			648SM1						648SM1		RX	50	1995-2004
		770SM1			621SM1						621SM1		RX	50	2006-2010
		770SM1			648SM1						648SM1		RX RACING	50	2004-2006
		694SM1			648SM1						648SM1		TUAREG RALLY	50	1991-1994
		684SM1											RX	125	1986-1989
					743SM1						743SM1		RX	125	1990-1991
		770SM1			743SM1						743SM1		RX	125	1992-2000
		684SM1											TUAREG RALLY	125	1986-1988
					612SM1						612SM1		TUAREG RALLY	125	1989-1990
		741SM1			612SM1						612SM1		TUAREG RALLY	125	1991-1994
					648SM1						648SM1		TUAREG WIND	125	1988-1989
		741SM1			612SM1						612SM1		TUAREG WIND	125	1990-1991
		621SM1			648SM1						648SM1		CLIMBER	250	1989-1992
		684SM1			612SM1						612SM1		TUAREG RALLY	250	1986-1987
		621SM1			648SM1						648SM1		CLIMBER 280 R	276	1993-1994
		621SM1			648SM1						648SM1		TX 312	276	1987-1988
					612SM1						612SM1		Tuareg	350	1988-1989
		684SM1			612SM1						612SM1		TUAREG WIND	350	1987-1989
772CM46	772CM44	772SM1	890CM46	890CM44	890SM1						890SM1		MXV	450	2009-2010
772CM46	772CM44	772SM1	890CM46	890CM44	890SM1						890SM1		RXV	450	2005-2011
772CM46	772CM44	772SM1	890CM46	890CM44	890SM1						890SM1		RXV	550	2005-2011
	669CM44	669SM1			612SM1						612SM1		TUAREG WIND	600	1988-1990
													BETA		
		648SM1			648SM1						648SM1		MX	50	1990-1994
		621SM1			621SM1						621SM1		MX ENDURO	50	1992-1995
		621SM1			621SM1						621SM1		RR (AJP cal.)	50	1998
					648SM1						648SM1		RR (Grimeca cal.)	50	1994-1997
		741SM1			621SM1						621SM1		RR ENDURO	50	1999-2007
		770SM1	890CM46	890CM44	890SM1						890SM1		RR ENDURO	50	2008-2014
		770SM1											RR ENDURO Alu	50	1999-2004
		770SM1	890CM46	890CM44	890SM1						890SM1		RR ENDURO FACTORY	50	2012-2014
		621SM1	890CM46	890CM44	890SM1						890SM1		RR ENDURO STANDARD	50	2009-2014
		770SM1			621SM1						621SM1		RR STANDARD	50	2005-2008
		621SM1			621SM1						621SM1		SUPERTRIAL	50	1997
		621SM1			621SM1						621SM1		EVO JUNIOR	80	2009-2014
		621SM1			621SM1						621SM1		REV	80	2000-2007
		621SM1			621SM1						621SM1		ALP 4T	125	2000-2005
		770SM1			890SM1						890SM1		ALP 4T	125	2006-2014
		688SM1							688CM66	688CM55			JONATHAN	125	1999
		770SM1			890SM1						890SM1		RR	125	2006-2014
		621SM1											SYNT	125	1994-1996
		621SM1											TECHNO	125	1994
		671SM1											TR 32	125	1986-1987
		671SM1											TR 33	125	1987
		671SM1			694SM1						694SM1		TR 34	125	1987-1989
		621SM1											TR 35	125	1990-1993
		770SM1	890CM46	890CM44	890SM1						890SM1		URBAN	125	2008-2014
		770SM1	890CM46	890CM44	890SM1						890SM1		URBAN SPECIAL	125	2009-2014
		621SM1											ZERO	125	1991-1992
		621SM1			621SM1						621SM1		ALP 4T	200	2000-2005
		770SM1	890CM46	890CM44	890SM1						890SM1		ALP 4T	200	2006-2014
		770SM1	890CM46	890CM44	890SM1						890SM1		URBAN	200	2008-2014
		770SM1	890CM46	890CM44	890SM1						890SM1		URBAN SPECIAL	200	2009-2014
		621SM1											ALP	240	1992
		621SM1			612SM1						612SM1		ALP	240	1996-1999
		671SM1											TR 33	240	1986-1987
		621SM1											TR 34-CAMPIONATO	240	1989
		671SM1			694SM1						694SM1		TR 34-REPLICA	240	1987-1988

OFFROAD / FUORISTRADA

			DISCHI / DISKS										SUPPORTI PINZA BRACKETS CALIPER	
			ANTERIORE / FRONT							POSTERIORE / REAR			DISK Ø260	DISK Ø270
MODELLO MODEL	CC	ANNO YEAR	BATFLY ALUMINIUM Ø270	S3 BATFLY CROSS Ø270	W-FLO Ø270	S3 BATFLY CROSS Ø260	W-FLO Ø260	W-FIX ØOEM	R-FIX ØOEM	BATFLY	W-FIX / W-FULL	R-FIX	Per pinza originale / For oem caliper	Per pinza originale / For oem caliper
GS RV	250	1980-1984												
RR	250	2005-2009				S34011	WL4002			BY4504	WF4501 / WF4506			
RR 2T ENDURO	250	2013-2014				S34012	WL4016				KT10RID			
RR 2T RACING	250	2013-2014				S34012	WL4016				KT10RID			
TECHNO	250	1994												
SYNT	260	1994-1996												
TR 35 REVERSE	260	1990-1993												
ZERO	260	1989-1992												
ZERO GARA	260	1993												
RR 2T ENDURO	300	2013-2014				S34012	WL4016				KT10RID			
RR 2T RACING	300	2013-2014				S34012	WL4016				KT10RID			
4.0 Alp	350	2003-2005												
4.0 Alp	350	2006												
EURO	350	1999-2006												
JONATHAN	350	2002-2006												
M4	350	2006												
RR 4T ENDURO	350	2011-2012				S34011	WL4002			BY4504	WF4501 / WF4506			
RR 4T ENDURO	350	2013-2014				S34012	WL4016				KT10RID			
RR 4T RACING	350	2014				S34012	WL4016				KT10RID			
RR 4T ENDURO	400	2005-2012				S34011	WL4002			BY4504	WF4501 / WF4506			
RR 4T ENDURO	400	2013-2014				S34012	WL4016				KT10RID			
RR 4T ENDURO	450	2005-2012				S34011	WL4002			BY4504	WF4501 / WF4506			
RR 4T ENDURO	450	2013-2014				S34012	WL4016				KT10RID			
RR 4T RACING	450	2013-2014				S34012	WL4016				KT10RID			
RR CROSS COUNTRY	450	2012												
RR 4T ENDURO	498	2012				S34011	WL4002			BY4504	WF4501 / WF4506			
RR 4T ENDURO	498	2013-2014				S34012	WL4016				KT10RID			
RR 4T RACING	498	2013-2014				S34012	WL4016				KT10RID			
GS RV	500	1982-1984												
RR 4T ENDURO	520	2010-2011				S34011	WL4002			BY4504	WF4501 / WF4506			
RR 4T ENDURO	525	2005-2009				S34011	WL4002			BY4504	WF4501 / WF4506			
BMW														
G 450 X	450	2008-2011												POW68
CAGIVA														
CROSS	125	1988												
WMX	125	1987-1988												
WMX	125	1989-1992												
WMX	250	1989-1991												
DERBI														
SENDA DRD PRO R	50	2005-2012												
SENDA DRD R	50	2003-2004												
SENDA DRD RACING LTD SM	50	2005-2007												
SENDA DRD RACING R	50	2004-2010												
SENDA DRD RACING R	50	2011-2012												
SENDA DRD X-TREME R	50	2011-2012												
SENDA L	50	1999												
SENDA R	50	1996-2002												
SENDA X-RACE R	50	2005-2011												
SENDA X-TREME R	50	1994-2011												
X-RACE	50	2005												
SENDA BAJA R Enduro	125	2009-2012												
SENDA DRD R	125	2010-2012												
SENDA R 4t	125	2004-2008												
SENDA R 4t	125	2009-2010												
FANTIC M.														
CABALLERO	50	1996-2000												
CABALLERO COMPETIZIONE	50	2006-2009												
CABALLERO COMPETIZIONE MINI	50	2008-2009												
CABALLERO MOTARD	50	2006-2009												
TRIAL	50	1987-1988												
TRIAL	50	1989-1995												
CABALLERO	125	1997-2000												
CABALLERO MOTARD	125	2007-2009												
CABALLERO Regolarita' Competizione	125	2007-2009												

OFFROAD / FUORISTRADA

											TRASFORMAZIONE MOTARD MOTARD TRASFORMATION				
			PASTIGLIE / PADS			PASTIGLIE / PADS			KIT MAGGIORAZIONE OVERSIZE KIT		DISCO DISK	PASTIGLIE PADS			SUPPORTO PINZA BRACKET CALIPER
			ANTERIORE / FRONT			POSTERIORE / REAR			ANTERIORE FRONT	POSTERIORE REAR	ANTERIORE FRONT	ANTERIORE FRONT		POSTERIORE REAR	DISK Ø320
MODELLO MODEL	CC	ANNO YEAR	CM46	CM44	SM1	CM46	CM44	SM1	OKI	OKI	SK2	CM66	CM55	SM1	Per pinza originale For oem caliper
GS RV	250	1980-1984			612SM1										
RR	250	2005-2009	772CM46	772CM44	772SM1	890CM46	890CM44	890SM1			WK087L			890SM1	
RR 2T ENDURO	250	2013-2014	772CM46	772CM44	772SM1	890CM46	890CM44	890SM1						890SM1	
RR 2T RACING	250	2013-2014	772CM46	772CM44	772SM1	890CM46	890CM44	890SM1						890SM1	
TECHNO	250	1994			621SM1										
SYNT	260	1994-1996			621SM1										
TR 35 REVERSE	260	1990-1993			621SM1										
ZERO	260	1989-1992			621SM1										
ZERO GARA	260	1993			621SM1										
RR 2T ENDURO	300	2013-2014	772CM46	772CM44	772SM1	890CM46	890CM44	890SM1						890SM1	
RR 2T RACING	300	2013-2014	772CM46	772CM44	772SM1	890CM46	890CM44	890SM1						890SM1	
4.0 Alp	350	2003-2005			770SM1			648SM1						648SM1	
4.0 Alp	350	2006			770SM1										
EURO	350	1999-2006			688SM1	773CM46	773CM44	773SM1				688CM66	688CM55	773SM1	
JONATHAN	350	2002-2006			688SM1	773CM46	773CM44	773SM1				688CM66	688CM55	773SM1	
M4	350	2006			688SM1							688CM66	688CM55		
RR 4T ENDURO	350	2011-2012	772CM46	772CM44	772SM1	890CM46	890CM44	890SM1			WK087L			890SM1	
RR 4T ENDURO	350	2013-2014	772CM46	772CM44	772SM1	890CM46	890CM44	890SM1						890SM1	
RR 4T RACING	350	2014	772CM46	772CM44	772SM1	890CM46	890CM44	890SM1						890SM1	
RR 4T ENDURO	400	2005-2012	772CM46	772CM44	772SM1	890CM46	890CM44	890SM1			WK087L			890SM1	
RR 4T ENDURO	400	2013-2014	772CM46	772CM44	772SM1	890CM46	890CM44	890SM1						890SM1	
RR 4T ENDURO	450	2005-2012	772CM46	772CM44	772SM1	890CM46	890CM44	890SM1			WK087L			890SM1	
RR 4T ENDURO	450	2013-2014	772CM46	772CM44	772SM1	890CM46	890CM44	890SM1						890SM1	
RR 4T RACING	450	2013-2014	772CM46	772CM44	772SM1	890CM46	890CM44	890SM1						890SM1	
RR CROSS COUNTRY	450	2012	772CM46	772CM44	772SM1	890CM46	890CM44	890SM1						890SM1	
RR 4T ENDURO	498	2012	772CM46	772CM44	772SM1	890CM46	890CM44	890SM1			WK087L			890SM1	
RR 4T ENDURO	498	2013-2014	772CM46	772CM44	772SM1	890CM46	890CM44	890SM1						890SM1	
RR 4T RACING	498	2013-2014	772CM46	772CM44	772SM1	890CM46	890CM44	890SM1						890SM1	
GS RV	500	1982-1984			612SM1										
RR 4T ENDURO	520	2010-2011	772CM46	772CM44	772SM1	890CM46	890CM44	890SM1			WK087L			890SM1	
RR 4T ENDURO	525	2005-2009	772CM46	772CM44	772SM1	890CM46	890CM44	890SM1			WK087L			890SM1	
BMW															
G 450 X	450	2008-2011	746CM46	746CM44	746SM1	891CM46	891CM44	891SM1					746CM55	891SM1	
CAGIVA															
CROSS	125	1988					669CM44	669SM1						669SM1	
WMX	125	1987-1988			612SM1			612SM1						612SM1	
WMX	125	1989-1992					669CM44	669SM1						669SM1	
WMX	250	1989-1991					669CM44	669SM1						669SM1	
DERBI															
SENDA DRD PRO R	50	2005-2012			828SM1			878SM1						878SM1	
SENDA DRD R	50	2003-2004			741SM1			621SM1						621SM1	
SENDA DRD RACING LTD SM	50	2005-2007			621SM1			621SM1						621SM1	
SENDA DRD RACING R	50	2004-2010			770SM1			621SM1						621SM1	
SENDA DRD RACING R	50	2011-2012			770SM1		702CM44	702SM1						702SM1	
SENDA DRD X-TREME R	50	2011-2012		702CM44	702SM1		702CM44	702SM1						702SM1	
SENDA L	50	1999			621SM1			621SM1						621SM1	
SENDA R	50	1996-2002			621SM1			621SM1						621SM1	
SENDA X-RACE R	50	2005-2011			621SM1			621SM1						621SM1	
SENDA X-TREME R	50	1994-2011			621SM1			621SM1						621SM1	
X-RACE	50	2005			621SM1			621SM1						621SM1	
SENDA BAJA R Enduro	125	2009-2012			770SM1			878SM1						878SM1	
SENDA DRD R	125	2010-2012			828SM1										
SENDA R 4t	125	2004-2008			770SM1			621SM1						621SM1	
SENDA R 4t	125	2009-2010			770SM1										
FANTIC M.															
CABALLERO	50	1996-2000						743SM1						743SM1	
CABALLERO COMPETIZIONE	50	2006-2009	746CM46	746CM44	746SM1	890CM46	890CM44	890SM1					746CM55	890SM1	
CABALLERO COMPETIZIONE MINI	50	2008-2009	746CM46	746CM44	746SM1	890CM46	890CM44	890SM1					746CM55	890SM1	
CABALLERO MOTARD	50	2006-2009			770SM1			743SM1						743SM1	
TRIAL	50	1987-1988			671SM1										
TRIAL	50	1989-1995			621SM1			671SM1						671SM1	
CABALLERO	125	1997-2000			741SM1			743SM1						743SM1	
CABALLERO MOTARD	125	2007-2009			770SM1			743SM1						743SM1	
CABALLERO Regolarita' Competizione	125	2007-2009	746CM46	746CM44	746SM1	701CM46	701CM44	701SM1					746CM55	701SM1	

OFFROAD / FUORISTRADA

MODELLO MODEL	CC	ANNO YEAR	DISCHI / DISKS – ANTERIORE / FRONT							DISCHI / DISKS – POSTERIORE / REAR			SUPPORTI PINZA BRACKETS CALIPER – DISK Ø260	SUPPORTI PINZA BRACKETS CALIPER – DISK Ø270
			BATFLY ALUMINIUM Ø270	S3 BATFLY CROSS Ø270	W-FLO Ø270	S3 BATFLY CROSS Ø260	W-FLO Ø260	W-FIX ØOEM	R-FIX ØOEM	BATFLY	W-FIX / W-FULL	R-FIX	Per pinza originale / For oem caliper	Per pinza originale / For oem caliper
TRIAL	125	1986-1987												
TRIAL	125	1988-1994												
TRIAL 201	200	1985-1986												
TRIAL 243	240	1987-1989												
TRIAL 245	240	1989-1990												
TRIAL 247	240	1990-1991												
TRIAL 301	250	1985-1986												
TRIAL 303	250	1987-1988												
TRIAL 305	250	1988-1989												
TRIAL 307	250	1989-1991												
TRIAL 309	250	1990-1993												
GAS GAS														
EC	125	1996-1999					GA04FLD			BY4505	KT11RID / WF4505	KT11RI		
EC	125	2000-2009					GA04FLD			BY4505	KT11RID / WF4505	KT11RI		
EC	125	2010-2011					GA04FLD			BY4505	KT11RID / WF4505	KT11RI		
EC RACING	125	2013-2014					GA04FLD			BY4505	KT11RID / WF4505	KT11RI		
HALLEY (2t)	125	2009												
MC	125	1996-1999					GA04FLD			BY4505	KT11RID / WF4505	KT11RI		
MC	125	2000-2009					GA04FLD			BY4505	KT11RID / WF4505	KT11RI		
PAMPERA	125	1998-1999												
PAMPERA 4T	125	2000-2003												
PAMPERA 4T	125	2004-2005												
TXT Pro	125	2004-2011												
EC	200	2000-2008					GA04FLD			BY4505	KT11RID / WF4505	KT11RI		
EC	200	2009-2011					GA04FLD			BY4505	KT11RID / WF4505	KT11RI		
EC	200	2012-2014					GA04FLD			BY4505	KT11RID / WF4505	KT11RI		
TXT Pro	200	2004-2011												
EC	250	1996-1999					GA04FLD			BY4505	KT11RID / WF4505	KT11RI		
EC	250	2000-2009					GA04FLD			BY4505	KT11RID / WF4505	KT11RI		
EC	250	2010					GA04FLD			BY4505	KT11RID / WF4505	KT11RI		
EC 2T	250	2011-2013					GA04FLD			BY4505	KT11RID / WF4505	KT11RI		
EC 2T	250	2014					GA04FLD			BY4505	KT11RID / WF4505	KT11RI		
EC 4T	250	2011-2014					GA04FLD			BY4505	KT11RID / WF4505	KT11RI		
EC F RACING	250	2013-2014					GA04FLD			BY4505	KT11RID / WF4505	KT11RI		
EC RACING	250	2012					GA04FLD			BY4505	KT11RID / WF4505	KT11RI		
EC RACING	250	2013					GA04FLD			BY4505	KT11RID / WF4505	KT11RI		
JTX	250	1997												
MC	250	1996-1999					GA04FLD			BY4505	KT11RID / WF4505	KT11RI		
MC	250	2000-2009					GA04FLD			BY4505	KT11RID / WF4505	KT11RI		
PAMPERA	250	1996-1999												
PAMPERA	250	2002-2005												
TXT Pro	250	2004-2011												
CONTAC T25	260	1993-1996												
PAMPERA	280	2004-2005												
TXT Pro	280	2004-2011												
EC	300	1996-1999					GA04FLD			BY4505	KT11RID / WF4505	KT11RI		
EC	300	2000-2009					GA04FLD			BY4505	KT11RID / WF4505	KT11RI		
EC	300	2010-2012					GA04FLD			BY4505	KT11RID / WF4505	KT11RI		
EC 2T	300	2013					GA04FLD			BY4505	KT11RID / WF4505	KT11RI		
EC 2T	300	2014					GA04FLD			BY4505	KT11RID / WF4505	KT11RI		
EC F RACING	300	2013-2014					GA04FLD			BY4505	KT11RID / WF4505	KT11RI		
EC RACING	300	2012-2013					GA04FLD			BY4505	KT11RID / WF4505	KT11RI		
MC	300	1996-1999					GA04FLD			BY4505	KT11RID / WF4505	KT11RI		
MC	300	2000-2009					GA04FLD			BY4505	KT11RID / WF4505	KT11RI		
TXT Pro	300	2004-2011												
JTX	320	1997												
JTR	370	1996												
PAMPERA	370	1998-2001												
EC	400	2002					GA04FLD			BY4505	KT11RID / WF4505	KT11RI		
EC	400	2006-2007					GA04FLD			BY4505	KT11RID / WF4505	KT11RI		
FSE	400	2002					GA04FLD			BY4505	KT11RID / WF4505	KT11RI		
MC	400	2002					GA04FLD			BY4505	KT11RID / WF4505	KT11RI		
MC	400	2006-2007					GA04FLD			BY4505	KT11RID / WF4505	KT11RI		
PAMPERA	400	2006-2007					GA04FLD			BY4505	KT11RID / WF4505	KT11RI		
EC	450	2003-2006					GA04FLD			BY4505	KT11RID / WF4505	KT11RI		

OFFROAD / FUORISTRADA

MODELLO MODEL	CC	ANNO YEAR	PASTIGLIE / PADS – ANTERIORE / FRONT			PASTIGLIE / PADS – POSTERIORE / REAR			KIT MAGGIORAZIONE OVERSIZE KIT – ANTERIORE FRONT	KIT MAGGIORAZIONE OVERSIZE KIT – POSTERIORE REAR	TRASFORMAZIONE MOTARD / MOTARD TRASFORMATION – DISCO DISK – ANTERIORE FRONT	TRASFORMAZIONE MOTARD – PASTIGLIE PADS – ANTERIORE FRONT		TRASFORMAZIONE MOTARD – PASTIGLIE PADS – POSTERIORE REAR	TRASFORMAZIONE MOTARD – SUPPORTO PINZA BRACKET CALIPER – DISK Ø320
			CM46	CM44	SM1	CM46	CM44	SM1	OKI	OKI	SK2	CM66	CM55	SM1	Per pinza originale For oem caliper
TRIAL	125	1986-1987			671SM1										
TRIAL	125	1988-1994			621SM1			621SM1						621SM1	
TRIAL 201	200	1985-1986			671SM1										
TRIAL 243	240	1987-1989			671SM1			671SM1						671SM1	
TRIAL 245	240	1989-1990			621SM1			621SM1						621SM1	
TRIAL 247	240	1990-1991			621SM1			621SM1						621SM1	
TRIAL 301	250	1985-1986			671SM1										
TRIAL 303	250	1987-1988			671SM1			671SM1						671SM1	
TRIAL 305	250	1988-1989			621SM1			621SM1						621SM1	
TRIAL 307	250	1989-1991			621SM1			621SM1						621SM1	
TRIAL 309	250	1990-1993			621SM1			621SM1						621SM1	
GAS GAS															
EC	125	1996-1999	746CM46	746CM44	746SM1	773CM46	773CM44	773SM1					746CM55	773SM1	
EC	125	2000-2009	772CM46	772CM44	772SM1	701CM46	701CM44	701SM1						701SM1	
EC	125	2010-2011	772CM46	772CM44	772SM1	890CM46	890CM44	890SM1						890SM1	
EC RACING	125	2013-2014	772CM46	772CM44	772SM1	890CM46	890CM44	890SM1						890SM1	
HALLEY (2t)	125	2009			688SM1							688CM66	688CM55		
MC	125	1996-1999	746CM46	746CM44	746SM1	773CM46	773CM44	773SM1					746CM55	773SM1	
MC	125	2000-2009	772CM46	772CM44	772SM1	701CM46	701CM44	701SM1						701SM1	
PAMPERA	125	1998-1999			621SM1			621SM1						621SM1	
PAMPERA 4T	125	2000-2003			621SM1			621SM1						621SM1	
PAMPERA 4T	125	2004-2005			770SM1										
TXT Pro	125	2004-2011			831SM1			832SM1						832SM1	
EC	200	2000-2008	772CM46	772CM44	772SM1	701CM46	701CM44	701SM1						701SM1	
EC	200	2009-2011	772CM46	772CM44	772SM1	890CM46	890CM44	890SM1						890SM1	
EC	200	2012-2014	772CM46	772CM44	772SM1	890CM46									
TXT Pro	200	2004-2011			831SM1			832SM1						832SM1	
EC	250	1996-1999	746CM46	746CM44	746SM1	773CM46	773CM44	773SM1					746CM55	773SM1	
EC	250	2000-2009	772CM46	772CM44	772SM1	701CM46	701CM44	701SM1						701SM1	
EC	250	2010	772CM46	772CM44	772SM1	890CM46	890CM44	890SM1						890SM1	
EC 2T	250	2011-2013	772CM46	772CM44	772SM1	890CM46	890CM44	890SM1						890SM1	
EC 2T	250	2014	772CM46	772CM44	772SM1	890CM46									
EC 4T	250	2011-2014	772CM46	772CM44	772SM1	890CM46	890CM44	890SM1						890SM1	
EC F RACING	250	2013-2014	772CM46	772CM44	772SM1	890CM46	890CM44	890SM1						890SM1	
EC RACING	250	2012	772CM46	772CM44	772SM1	890CM46	890CM44	890SM1						890SM1	
EC RACING	250	2013	772CM46	772CM44	772SM1		890CM44								
JTX	250	1997			621SM1			621SM1						621SM1	
MC	250	1996-1999	746CM46	746CM44	746SM1	773CM46	773CM44	773SM1					746CM55	773SM1	
MC	250	2000-2009	772CM46	772CM44	772SM1	701CM46	701CM44	701SM1						701SM1	
PAMPERA	250	1996-1999			621SM1			621SM1						621SM1	
PAMPERA	250	2002-2005			831SM1										
TXT Pro	250	2004-2011			831SM1			832SM1						832SM1	
CONTAC T25	260	1993-1996			621SM1			621SM1						621SM1	
PAMPERA	280	2004-2005			770SM1										
TXT Pro	280	2004-2011			831SM1			832SM1						832SM1	
EC	300	1996-1999	746CM46	746CM44	746SM1	773CM46	773CM44	773SM1					746CM55	773SM1	
EC	300	2000-2009	772CM46	772CM44	772SM1	701CM46	701CM44	701SM1						701SM1	
EC	300	2010-2012	772CM46	772CM44	772SM1	890CM46	890CM44	890SM1						890SM1	
EC 2T	300	2013	772CM46	772CM44	772SM1	890CM46	890CM44	890SM1						890SM1	
EC 2T	300	2014	772CM46	772CM44	772SM1	890CM46									
EC F RACING	300	2013-2014	772CM46	772CM44	772SM1	890CM46	890CM44	890SM1						890SM1	
EC RACING	300	2012-2013	772CM46	772CM44	772SM1	890CM46	890CM44	890SM1						890SM1	
MC	300	1996-1999	746CM46	746CM44	746SM1	773CM46	773CM44	773SM1					746CM55	773SM1	
MC	300	2000-2009	772CM46	772CM44	772SM1	701CM46	701CM44	701SM1						701SM1	
TXT Pro	300	2004-2011			831SM1			832SM1						832SM1	
JTX	320	1997			621SM1			621SM1						621SM1	
JTR	370	1996			621SM1			621SM1						621SM1	
PAMPERA	370	1998-2001			621SM1			621SM1						621SM1	
EC	400	2002	772CM46	772CM44	772SM1	701CM46	701CM44	701SM1						701SM1	
EC	400	2006-2007	772CM46	772CM44	772SM1	701CM46	701CM44	701SM1						701SM1	
FSE	400	2002	772CM46	772CM44	772SM1	701CM46	701CM44	701SM1						701SM1	
MC	400	2002	772CM46	772CM44	772SM1	701CM46	701CM44	701SM1						701SM1	
MC	400	2006-2007	772CM46	772CM44	772SM1	701CM46	701CM44	701SM1						701SM1	
PAMPERA	400	2006-2007	772CM46	772CM44	772SM1	701CM46	701CM44	701SM1						701SM1	
EC	450	2003-2006	772CM46	772CM44	772SM1	701CM46	701CM44	701SM1						701SM1	

OFFROAD / FUORISTRADA

			DISCHI / DISKS										SUPPORTI PINZA BRACKETS CALIPER	
			ANTERIORE / FRONT							POSTERIORE / REAR			DISK Ø260	DISK Ø270
MODELLO MODEL	CC	ANNO YEAR	BATFLY ALUMINIUM Ø270	S3 BATFLY CROSS Ø270	W-FLO Ø270	S3 BATFLY CROSS Ø260	W-FLO Ø260	W-FIX ØOEM	R-FIX ØOEM	BATFLY	W-FIX / W-FULL	R-FIX	Per pinza originale / For oem caliper	Per pinza originale / For oem caliper
EC	450	2007								BY4505	KT11RID / WF4505	KT11RI		
EC F	450	2013-2014					GA04FLD			BY4505	KT11RID / WF4505	KT11RI		
FSE	450	2003-2006					GA04FLD			BY4505	KT11RID / WF4505	KT11RI		
FSR	450	2007					GA04FLD			BY4505	KT11RID / WF4505	KT11RI		
MC	450	2003					GA04FLD			BY4505	KT11RID / WF4505	KT11RI		
MC	450	2007								BY4505	KT11RID / WF4505	KT11RI		
GILERA														
CROSS	125	1984-1985												
CROSS	250	1983-1985												
HIGHLAND														
MX	450	2006												
HONDA														
CR R	80	1986-1989									H006RID			
CR R	80	1990-1991									H006RID			
CR R	80	1992-1995									H006RID			
CR R	80	1996-2002						H024FID			H006RID			
CR R	85	2003-2007						H024FID			H006RID			
CR E	125	1985-1986												
CR E	125	1987-1988												
CR E	125	1989-1991										H002RI		
CR E	125	1992-1993							H013FI			H002RI		
CR E	125	1994							H013FI			H002RI	POW02	
CR E	125	1995-1997	BY4122	S34002	WL4003	S34001		H025FID				H002RI	POW02	
CR E	125	1998-2001	BY4122	S34002	WL4003	S34001		H025FID			H025RID		POW02	
CR E	125	2002-2003	BY4122	S34002	WL4003	S34001		H025FID		BY4501	H060RID / WF4508		POW02	
CR E	125	2004-2008	BY4122	S34002	WL4003	S34001		H025FID		BY4501	H060RID / WF4508		POW78	POW79
CR R	125	1984-1986												
CR R	125	1987-1988												
CR R	125	1989-1991										H002RI		
CR R	125	1992-1993							H013FI			H002RI		
CR R	125	1994							H013FI			H002RI	POW02	
CR R	125	1995-1997				S34001		H025FID				H002RI	POW02	
CR R	125	1998-2001				S34001		H025FID			H025RID		POW02	
CR R	125	2002-2003				S34001		H025FID		BY4501	H060RID / WF4508		POW02	
CR R	125	2004-2008	BY4122	S34002	WL4003	S34001		H025FID		BY4501	H060RID / WF4508		POW78	POW79
XR L	125	2003-2006												
CRF F	150	2003-2008						H009FID	H009FI					
CRF R	150	2007-2013						H024FID			H006RID			
CRF RB	150	2007-2013						H024FID			H006RID			
CRF F	230	2004-2008						H009FID	H009FI					
CRF TRAIL	230	2004-2010						H009FID	H009FI					
CR E	250	1985-1986												
CR E	250	1987-1988												
CR E	250	1989-1991										H002RI		
CR E	250	1992-1993							H013FI			H002RI		
CR E	250	1994							H013FI			H002RI	POW02	
CR E	250	1995-1996	BY4122	S34002	WL4003	S34001		H025FID				H002RI	POW02	
CR E	250	1997-2001	BY4122	S34002	WL4003	S34001		H025FID			H025RID		POW02	
CR E	250	2002-2003	BY4122	S34002	WL4003	S34001		H025FID		BY4501	H060RID / WF4508		POW02	
CR E	250	2004-2008	BY4122	S34002	WL4003	S34001		H025FID		BY4501	H060RID / WF4508		POW78	POW79
CR R	250	1984-1986												
CR R	250	1987-1988												
CR R	250	1989-1991										H002RI		
CR R	250	1992-1993							H013FI			H002RI		
CR R	250	1994							H013FI			H002RI	POW02	
CR R	250	1995-1996				S34001		H025FID				H002RI	POW02	
CR R	250	1997-2001				S34001		H025FID			H025RID		POW02	
CR R	250	2002-2003				S34001		H025FID		BY4501	H060RID / WF4508		POW02	
CR R	250	2004-2008	BY4122	S34002	WL4003	S34001		H025FID		BY4501	H060RID / WF4508		POW78	POW79
CRF L	250	2013-2014						WF4103			H009RID	H009RI		
CRF R	250	2004-2013	BY4122	S34002	WL4003	S34001		H025FID		BY4501	H060RID / WF4508		POW78	POW79
CRF R	250	2014	BY4122	S34002	WL4003	S34001		H025FID		BY4501	H060RID / WF4508		POW78	POW79
CRF R	250	2015				S34001				BY4501	H060RID / WF4508			
CRF X	250	2004-2009	BY4122	S34002	WL4003	S34001		H025FID		BY4501	H060RID / WF4508		POW78	POW79
CRF X	250	2010-2011	BY4122	S34002	WL4003	S34001		H025FID		BY4501	H060RID / WF4508		POW78	POW79

PASTIGLIE / PADS			PASTIGLIE / PADS			KIT MAGGIORAZIONE OVERSIZE KIT		TRASFORMAZIONE MOTARD MOTARD TRASFORMATION					OFFROAD / FUORISTRADA		
ANTERIORE / FRONT			POSTERIORE / REAR			ANTERIORE FRONT	POSTERIORE REAR	DISCO DISK	PASTIGLIE PADS			SUPPORTO PINZA BRACKET CALIPER			
CM46	CM44	SM1	CM46	CM44	SM1	OKI	OKI	ANTERIORE FRONT SK2	ANTERIORE FRONT CM66	ANTERIORE FRONT CM55	POSTERIORE REAR SM1	DISK Ø320 Per pinza originale For oem caliper	MODELLO MODEL	CC	ANNO YEAR
772CM46	772CM44	772SM1	701CM46	701CM44	701SM1						701SM1		EC	450	2007
772CM46	772CM44	772SM1	890CM46	890CM44	890SM1						890SM1		EC F	450	2013-2014
772CM46	772CM44	772SM1	701CM46	701CM44	701SM1						701SM1		FSE	450	2003-2006
					701SM1				688CM66	688CM55	701SM1		FSR	450	2007
772CM46	772CM44	772SM1	701CM46	701CM44	701SM1						701SM1		MC	450	2003
772CM46	772CM44	772SM1	701CM46	701CM44	701SM1						701SM1		MC	450	2007
													GILERA		
		612SM1											CROSS	125	1984-1985
		612SM1											CROSS	250	1983-1985
													HIGHLAND		
746CM46	746CM44	746SM1	773CM46	773CM44	773SM1					746CM55	773SM1		MX	450	2006
													HONDA		
	703CM44	703SM1											CR R	80	1986-1989
686CM46	686CM44	686SM1											CR R	80	1990-1991
686CM46	686CM44	686SM1	701CM46	701CM44	701SM1						701SM1		CR R	80	1992-1995
686CM46	686CM44	686SM1	701CM46	701CM44	701SM1	OKI64					701SM1		CR R	80	1996-2002
686CM46	686CM44	686SM1	701CM46	701CM44	701SM1	OKI64					701SM1		CR R	85	2003-2007
	667CM44	667SM1											CR E	125	1985-1986
	700CM44	700SM1	701CM46	701CM44	701SM1						701SM1		CR E	125	1987-1988
	700CM44	700SM1	701CM46	701CM44	701SM1						701SM1		CR E	125	1989-1991
	700CM44	700SM1	701CM46	701CM44	701SM1						701SM1		CR E	125	1992-1993
	700CM44	700SM1	701CM46	701CM44	701SM1						701SM1		CR E	125	1994
772CM46	772CM44	772SM1	701CM46	701CM44	701SM1			WK051L			701SM1	POW21	CR E	125	1995-1997
772CM46	772CM44	772SM1	701CM46	701CM44	701SM1			WK051L			701SM1	POW21	CR E	125	1998-2001
772CM46	772CM44	772SM1	886CM46	886CM44	886SM1			WK051L			886SM1	POW21	CR E	125	2002-2003
772CM46	772CM44	772SM1	886CM46	886CM44	886SM1	OKBY18 / OKS301 / OKS302 / OKWL01		WK051L			886SM1	POW83	CR E	125	2004-2008
	667CM44	667SM1											CR R	125	1984-1986
	700CM44	700SM1	701CM46	701CM44	701SM1						701SM1		CR R	125	1987-1988
	700CM44	700SM1	701CM46	701CM44	701SM1						701SM1		CR R	125	1989-1991
	700CM44	700SM1	701CM46	701CM44	701SM1						701SM1		CR R	125	1992-1993
	700CM44	700SM1	701CM46	701CM44	701SM1						701SM1		CR R	125	1994
772CM46	772CM44	772SM1	701CM46	701CM44	701SM1			WK051L			701SM1	POW21	CR R	125	1995-1997
772CM46	772CM44	772SM1	701CM46	701CM44	701SM1			WK051L			701SM1	POW21	CR R	125	1998-2001
772CM46	772CM44	772SM1	886CM46	886CM44	886SM1			WK051L			886SM1	POW21	CR R	125	2002-2003
772CM46	772CM44	772SM1	886CM46	886CM44	886SM1	OKBY18 / OKS301 / OKS302 / OKWL01		WK051L			886SM1	POW83	CR R	125	2004-2008
		716SM1								716CM55			XR L	125	2003-2006
													CRF F	150	2003-2008
686CM46	686CM44	686SM1	886CM46	886CM44	886SM1	OKI64					886SM1		CRF R	150	2007-2013
686CM46	686CM44	686SM1	886CM46	886CM44	886SM1	OKI64					886SM1		CRF RB	150	2007-2013
													CRF F	230	2004-2008
772CM46	772CM44	772SM1											CRF TRAIL	230	2004-2010
	667CM44	667SM1											CR E	250	1985-1986
	700CM44	700SM1	701CM46	701CM44	701SM1						701SM1		CR E	250	1987-1988
	700CM44	700SM1	701CM46	701CM44	701SM1						701SM1		CR E	250	1989-1991
	700CM44	700SM1	701CM46	701CM44	701SM1						701SM1		CR E	250	1992-1993
	700CM44	700SM1	701CM46	701CM44	701SM1						701SM1		CR E	250	1994
772CM46	772CM44	772SM1	701CM46	701CM44	701SM1			WK051L			701SM1	POW21	CR E	250	1995-1996
772CM46	772CM44	772SM1	701CM46	701CM44	701SM1			WK051L			701SM1	POW21	CR E	250	1997-2001
772CM46	772CM44	772SM1	886CM46	886CM44	886SM1			WK051L			886SM1	POW21	CR E	250	2002-2003
772CM46	772CM44	772SM1	886CM46	886CM44	886SM1	OKBY18 / OKS301 / OKS302 / OKWL01		WK051L			886SM1	POW83	CR E	250	2004-2008
	667CM44	667SM1											CR R	250	1984-1986
	700CM44	700SM1	701CM46	701CM44	701SM1						701SM1		CR R	250	1987-1988
	700CM44	700SM1	701CM46	701CM44	701SM1						701SM1		CR R	250	1989-1991
	700CM44	700SM1	701CM46	701CM44	701SM1						701SM1		CR R	250	1992-1993
	700CM44	700SM1	701CM46	701CM44	701SM1						701SM1		CR R	250	1994
772CM46	772CM44	772SM1	701CM46	701CM44	701SM1			WK051L			701SM1	POW21	CR R	250	1995-1996
772CM46	772CM44	772SM1	701CM46	701CM44	701SM1			WK051L			701SM1	POW21	CR R	250	1997-2001
772CM46	772CM44	772SM1	886CM46	886CM44	886SM1			WK051L			886SM1	POW21	CR R	250	2002-2003
772CM46	772CM44	772SM1	886CM46	886CM44	886SM1	OKBY18 / OKS301 / OKS302 / OKWL01		WK051L			886SM1	POW83	CR R	250	2004-2008
					965SM1						965SM1		CRF L	250	2013-2014
772CM46	772CM44	772SM1	886CM46	886CM44	886SM1	OKBY18 / OKS301 / OKS302 / OKWL01		WK051L			886SM1	POW83	CRF R	250	2004-2013
772CM46	772CM44	772SM1		886CM44	886SM1	OKBY18 / OKS301 / OKS302 / OKWL01		WK051L			886SM1	POW83	CRF R	250	2014
772CM46	772CM44	772SM1		886CM44	886SM1								CRF R	250	2015
772CM46	772CM44	772SM1	886CM46	886CM44	886SM1	OKBY18 / OKS301 / OKS302 / OKWL01		WK051L			886SM1	POW83	CRF X	250	2004-2009
								WK051L				POW83	CRF X	250	2010-2011

OFFROAD / FUORISTRADA																														OFFROAD / FUORISTRADA
			DISCHI / DISKS										SUPPORTI PINZA BRACKETS CALIPER		PASTIGLIE / PADS			PASTIGLIE / PADS			KIT MAGGIORAZIONE OVERSIZE KIT		TRASFORMAZIONE MOTARD MOTARD TRASFORMATION							
			ANTERIORE / FRONT						POSTERIORE / REAR				DISK Ø260	DISK Ø270	ANTERIORE / FRONT			POSTERIORE / REAR			ANTERIORE FRONT	POSTERIORE REAR	DISCO DISK ANTERIORE FRONT	PASTIGLIE PADS ANTERIORE FRONT		PASTIGLIE PADS POSTERIORE REAR	SUPPORTO PINZA BRACKET CALIPER DISK Ø320			
MODELLO MODEL	CC	ANNO YEAR	BATFLY ALUMINIUM Ø270	S3 BATFLY CROSS Ø270	W-FLO Ø270	S3 BATFLY CROSS Ø260	W-FLO Ø260	W-FIX ØOEM	R-FIX ØOEM	BATFLY	W-FIX / W-FULL	R-FIX	Per pinza originale / For oem caliper	Per pinza originale / For oem caliper	CM46	CM44	SM1	CM46	CM44	SM1	OKI	OKI	SK2	CM66	CM55	SM1	Per pinza originale For oem caliper	MODELLO MODEL	CC	ANNO YEAR
CRF X	250	2012	BY4122	S34002	WL4003	S34001		H025FID		BY4501	H060RID / WF4508		POW78	POW79	772CM46	772CM44	772SM1	886CM46	886CM44	886SM1	OKBY18 / OKS301 / OKS302 / OKWL01		WK051L			886SM1	POW83	CRF X	250	2012
XR R	250	1984-1987							H013FI							667CM44	667SM1											XR R	250	1984-1987
XR R	250	1988-1989						H009FID	H009FI							700CM44	700SM1											XR R	250	1988-1989
XR R	250	1990						H009FID	H009FI							700CM44	700SM1	701CM46	701CM44	701SM1						701SM1		XR R	250	1990
XR R	250	1991-1995						H009FID	H009FI		H009RID	H009RI	POW02			700CM44	700SM1	701CM46	701CM44	701SM1			WK050L			701SM1	POW21	XR R	250	1991-1995
XR R	250	1996-2004						H009FID	H009FI		H009RID	H009RI	POW02		772CM46	772CM44	772SM1	701CM46	701CM44	701SM1			WK050L			701SM1	POW21	XR R	250	1996-2004
XR R	350	1984-1985							H013FI							667CM44	667SM1											XR R	350	1984-1985
XR R	400	1995-2005						H009FID	H009FI		H009RID	H009RI	POW02		772CM46	772CM44	772SM1	701CM46	701CM44	701SM1			WK050L			701SM1	POW21	XR R	400	1995-2005
XR R	400	2006-2007									H009RID	H009RI					716SM1	701CM46	701CM44	701SM1					716CM55	701SM1		XR R	400	2006-2007
XR R	440	2006-2007									H009RID	H009RI					716SM1	701CM46	701CM44	701SM1					716CM55	701SM1		XR R	440	2006-2007
CRF R	450	2002-2003	BY4122	S34002	WL4003	S34001		H025FID		BY4501	H060RID / WF4508		POW02		772CM46	772CM44	772SM1	886CM46	886CM44	886SM1			WK051L			886SM1	POW21	CRF R	450	2002-2003
CRF R	450	2004-2014	BY4122	S34002	WL4003	S34001		H025FID		BY4501	H060RID / WF4508		POW78	POW79	772CM46	772CM44	772SM1	886CM46	886CM44	886SM1	OKBY18 / OKS301 / OKS302 / OKWL01		WK051L			886SM1	POW83	CRF R	450	2004-2014
CRF R	450	2015				S34001				BY4501	H060RID / WF4508				772CM46	772CM44	772SM1	886CM46	886CM44	886SM1								CRF R	450	2015
CRF X	450	2004-2009	BY4122	S34002	WL4003	S34001		H025FID		BY4501	H060RID / WF4508		POW78	POW79	772CM46	772CM44	772SM1	886CM46	886CM44	886SM1	OKBY18 / OKS301 / OKS302 / OKWL01		WK051L			886SM1	POW83	CRF X	450	2004-2009
CRF X	450	2010-2011	BY4122	S34002	WL4003	S34001		H025FID		BY4501	H060RID / WF4508		POW78	POW79									WK051L				POW83	CRF X	450	2010-2011
CRF X	450	2012	BY4122	S34002	WL4003	S34001		H025FID		BY4501	H060RID / WF4508		POW78	POW79	772CM46	772CM44	772SM1	886CM46	886CM44	886SM1	OKBY18 / OKS301 / OKS302 / OKWL01		WK051L			886SM1	POW83	CRF X	450	2012
CR E	500	1985-1986														667CM44	667SM1											CR E	500	1985-1986
CR E	500	1987														700CM44	700SM1	701CM46	701CM44	701SM1						701SM1		CR E	500	1987
CR E	500	1988							H013FI							700CM44	700SM1	701CM46	701CM44	701SM1						701SM1		CR E	500	1988
CR E	500	1989-1991										H002RI				700CM44	700SM1	701CM46	701CM44	701SM1						701SM1		CR E	500	1989-1991
CR E	500	1992-1993							H013FI			H002RI				700CM44	700SM1	701CM46	701CM44	701SM1						701SM1		CR E	500	1992-1993
CR E	500	1994							H013FI			H002RI	POW02		772CM46	772CM44	772SM1	701CM46	701CM44	701SM1						701SM1		CR E	500	1994
CR E	500	1995-2001	BY4122	S34002	WL4003	S34001		H025FID				H002RI	POW02		772CM46	772CM44	772SM1	701CM46	701CM44	701SM1			WK051L			701SM1	POW21	CR E	500	1995-2001
CR R	500	1984-1986														667CM44	667SM1											CR R	500	1984-1986
CR R	500	1987														700CM44	700SM1	701CM46	701CM44	701SM1						701SM1		CR R	500	1987
CR R	500	1988							H013FI							700CM44	700SM1	701CM46	701CM44	701SM1						701SM1		CR R	500	1988
CR R	500	1989-1991										H002RI				700CM44	700SM1	701CM46	701CM44	701SM1						701SM1		CR R	500	1989-1991
CR R	500	1992-1993							H013FI			H002RI				700CM44	700SM1	701CM46	701CM44	701SM1						701SM1		CR R	500	1992-1993
CR R	500	1994							H013FI			H002RI	POW02		772CM46	772CM44	772SM1	701CM46	701CM44	701SM1						701SM1		CR R	500	1994
CR R	500	1995-2001	BY4122	S34002	WL4003	S34001		H025FID				H002RI	POW02		772CM46	772CM44	772SM1	701CM46	701CM44	701SM1			WK051L			701SM1	POW21	CR R	500	1995-2001
XR R	500	1983-1986							H009RI							667CM44	667SM1											XR R	500	1983-1986
XR R	600	1991-1993						H009FID	H009FI		H009RID	H009RI				700CM44	700SM1	701CM46	701CM44	701SM1			WK050L			701SM1		XR R	600	1991-1993
XR R	600	1994-2000						H009FID	H009FI		H009RID	H009RI	POW02		772CM46	772CM44	772SM1	701CM46	701CM44	701SM1			WK050L			701SM1	POW21	XR R	600	1994-2000
XR R (Rear Drum Model)	600	1983-1987						H009FID	H009FI							667CM44	667SM1						WK050L					XR R (Rear Drum Model)	600	1983-1987
XR R (Rear Drum Model)	600	1988-1990						H009FID	H009FI							700CM44	700SM1						WK050L					XR R (Rear Drum Model)	600	1988-1990
XR L	650	1993-2012						WF7102	H003FI		H022RID	H022RI			772CM46	772CM44	772SM1	701CM46	701CM44	701SM1						701SM1	POW21	XR L	650	1993-2012
XR R	650	2000-2008						H009FID	H009FI		H013RID		POW02		772CM46	772CM44	772SM1	701CM46	701CM44	701SM1			WK050L			701SM1	POW21	XR R	650	2000-2008
HONDA-HM																												HONDA-HM		
BAJA 10/10 JUNIOR	50	1999-2011															832SM1			832SM1						832SM1		BAJA 10/10 JUNIOR	50	1999-2011
BAJA 10/10 SENIOR	50	1999-2011															832SM1			832SM1						832SM1		BAJA 10/10 SENIOR	50	1999-2011
BAJA 12/15	50	1999-2011															832SM1			832SM1						832SM1		BAJA 12/15	50	1999-2011
CR E	50	1995-1998																		612SM1						612SM1		CR E	50	1995-1998
CR E	50	1999-2001															770SM1			743SM1						743SM1		CR E	50	1999-2001
CR E	50	2002															770SM1			878SM1						878SM1		CR E	50	2002
CR E DERAPAGE	50	1999-2002															770SM1			743SM1						743SM1		CR E DERAPAGE	50	1999-2002
CR E DERAPAGE	50	2003-2005															770SM1			878SM1						878SM1		CR E DERAPAGE	50	2003-2005
CRE BAJA	50	2001-2002													746CM46	746CM44	746SM1			621SM1						621SM1		CRE BAJA	50	2001-2002
CRE BAJA	50	2003-2009															770SM1			878SM1						878SM1		CRE BAJA	50	2003-2009
CRE BAJA RR	50	2007-2009															770SM1	886CM46	886CM44	886SM1						886SM1		CRE BAJA RR	50	2007-2009
CRE DERAPAGE	50	2001-2002													746CM46	746CM44	746SM1			621SM1						621SM1		CRE DERAPAGE	50	2001-2002
CRE DERAPAGE	50	2003-2009															770SM1			878SM1						878SM1		CRE DERAPAGE	50	2003-2009
CRE DERAPAGE RR	50	2007-2009															770SM1	886CM46	886CM44	886SM1						886SM1		CRE DERAPAGE RR	50	2007-2009
CRE SIX	50	2001-2002													746CM46	746CM44	746SM1											CRE SIX	50	2001-2002
CRE SIX	50	2003-2009															770SM1			878SM1						878SM1		CRE SIX	50	2003-2009
CRE SIX COMPETITION	50	2007-2008															770SM1	886CM46	886CM44	886SM1						886SM1		CRE SIX COMPETITION	50	2007-2008
CRE SIX COMPETITION	50	2009																886CM46	886CM44	886SM1						886SM1		CRE SIX COMPETITION	50	2009
CRM DERAPAGE COMPETITION	50	2007-2008															770SM1	886CM46	886CM44	886SM1						886SM1		CRM DERAPAGE COMPETITION	50	2007-2008
CRM DERAPAGE COMPETITION	50	2009																886CM46	886CM44	886SM1						886SM1		CRM DERAPAGE COMPETITION	50	2009
CRE	80	1998-2002													686CM46	686CM44	686SM1	701CM46	701CM44	701SM1						701SM1		CRE	80	1998-2002
CR	85	2003-2007													686CM46	686CM44	686SM1	701CM46	701CM44	701SM1						701SM1		CR	85	2003-2007
CRE	125	1995-2001													772CM46	772CM44	772SM1	701CM46	701CM44	701SM1						701SM1		CRE	125	1995-2001
CRE BAJA RR 2T	125	2011																886CM46	886CM44	886SM1						886SM1		CRE BAJA RR 2T	125	2011
CRE F X	125	2008-2009															770SM1	886CM46	886CM44	886SM1						886SM1		CRE F X	125	2008-2009
CRE R ENDURO	125	2002-2007													772CM46	772CM44	772SM1	886CM46	886CM44	886SM1						886SM1		CRE R ENDURO	125	2002-2007
CRE R SUPERMOTARD	125	2002-2006													772CM46	772CM44	772SM1	886CM46	886CM44	886SM1						886SM1		CRE R SUPERMOTARD	125	2002-2006

OFFROAD / FUORISTRADA																														
			DISCHI / DISKS										SUPPORTI PINZA BRACKETS CALIPER		PASTIGLIE / PADS			PASTIGLIE / PADS			KIT MAGGIORAZIONE OVERSIZE KIT		TRASFORMAZIONE MOTARD MOTARD TRASFORMATION					OFFROAD / FUORISTRADA		
			ANTERIORE / FRONT							POSTERIORE / REAR			DISK Ø260	DISK Ø270	ANTERIORE / FRONT			POSTERIORE / REAR			ANTERIORE FRONT	POSTERIORE REAR	DISCO DISK ANTERIORE FRONT	PASTIGLIE PADS ANTERIORE FRONT		PASTIGLIE PADS POSTERIORE REAR	SUPPORTO PINZA BRACKET CALIPER DISK Ø320			
MODELLO MODEL	CC	ANNO YEAR	BATFLY ALUMINIUM Ø270	S3 BATFLY CROSS Ø270	W-FLO Ø270	S3 BATFLY CROSS Ø260	W-FLO Ø260	W-FIX ØOEM	R-FIX ØOEM	BATFLY	W-FIX / W-FULL	R-FIX	Per pinza originale / For oem caliper	Per pinza originale / For oem caliper	CM46	CM44	SM1	CM46	CM44	SM1	OKI	OKI	SK2	CM66	CM55	SM1	Per pinza originale For oem caliper	MODELLO MODEL	CC	ANNO YEAR
CRE SIX COMPETITION 2T	125	2011													772CM46	772CM44	772SM1	886CM46	886CM44	886SM1						886SM1		CRE SIX COMPETITION 2T	125	2011
CRM Derapage Competition 2T	125	2011																886CM46	886CM44	886SM1						886SM1		CRM Derapage Competition 2T	125	2011
CRM DERAPAGE RR 2T	125	2011																886CM46	886CM44	886SM1						886SM1		CRM DERAPAGE RR 2T	125	2011
CRM F X	125	2008-2009															770SM1	886CM46	886CM44	886SM1						886SM1		CRM F X	125	2008-2009
CRF R	150	2007-2009						H025FID		BY4501	H060RID / WF4508		POW78	POW79	686CM46	686CM44	686SM1	886CM46	886CM44	886SM1						886SM1		CRF R	150	2007-2009
CRF ENDURO	230	2004-2010	BY4122	S34002	WL4003	S34001		H025FID		BY4501	H060RID / WF4508		POW78	POW79	772CM46	772CM44	772SM1	886CM46	886CM44	886SM1						886SM1		CRF ENDURO	230	2004-2010
CRF MOTARD	230	2004-2010													772CM46	772CM44	772SM1	886CM46	886CM44	886SM1						886SM1		CRF MOTARD	230	2004-2010
CRF TRIAL	230	2004-2010													772CM46	772CM44	772SM1	886CM46	886CM44	886SM1						886SM1		CRF TRIAL	230	2004-2010
CR R	250	2004													772CM46	772CM44	772SM1	886CM46	886CM44	886SM1						886SM1		CR R	250	2004
CRE	250	1997-2001													772CM46	772CM44	772SM1	701CM46	701CM44	701SM1						701SM1		CRE	250	1997-2001
CRE	250	2002													772CM46	772CM44	772SM1	886CM46	886CM44	886SM1						886SM1		CRE	250	2002
CRE F	250	2004-2009	BY4122	S34002	WL4003	S34001		H025FID		BY4501	H060RID / WF4508		POW78	POW79	772CM46	772CM44	772SM1	886CM46	886CM44	886SM1	OKBY18 / OKS302 / OKWL01		WK051L			886SM1	POW83	CRE F	250	2004-2009
CRE F 250 R	250	2004-2009	BY4122	S34002	WL4003	S34001		H025FID		BY4501	H060RID / WF4508		POW78	POW79	772CM46	772CM44	772SM1	886CM46	886CM44	886SM1						886SM1		CRE F 250 R	250	2004-2009
CRE F 250 X	250	2008-2011	BY4122	S34002	WL4003	S34001		H025FID		BY4501	H060RID / WF4508		POW78	POW79	772CM46	772CM44	772SM1	886CM46	886CM44	886SM1						886SM1		CRE F 250 X	250	2008-2011
CRE R ENDURO	250	2002-2007													772CM46	772CM44	772SM1	886CM46	886CM44	886SM1						886SM1		CRE R ENDURO	250	2002-2007
CRE R SUPERMOTARD	250	2002-2003													772CM46	772CM44	772SM1	886CM46	886CM44	886SM1						886SM1		CRE R SUPERMOTARD	250	2002-2003
CRE X	250	2004-2008	BY4122	S34002	WL4003	S34001		H025FID		BY4501	H060RID / WF4508		POW78	POW79	772CM46	772CM44	772SM1	886CM46	886CM44	886SM1	OKBY18 / OKS302 / OKWL01		WK051L			886SM1	POW83	CRE X	250	2004-2008
CRE X	250	2009	BY4122	S34002	WL4003	S34001		H025FID		BY4501	H060RID / WF4508		POW78	POW79	772CM46	772CM44	772SM1	886CM46	886CM44	886SM1	OKBY18 / OKS302 / OKWL01					886SM1		CRE X	250	2009
CRF F	250	2004-2009	BY4122	S34002	WL4003	S34001		H025FID		BY4501	H060RID / WF4508		POW78	POW79	772CM46	772CM44	772SM1	886CM46	886CM44	886SM1						886SM1		CRF F	250	2004-2009
CRF MOTARD	250	2004-2006													772CM46	772CM44	772SM1	886CM46	886CM44	886SM1						886SM1		CRF MOTARD	250	2004-2006
CRF R	250	2008-2012	BY4122	S34002	WL4003	S34001		H025FID		BY4501	H060RID / WF4508		POW78	POW79	772CM46	772CM44	772SM1	886CM46	886CM44	886SM1	OKBY18 / OKS301 / OKS302 / OKWL01					886SM1		CRF R	250	2008-2012
CRF R	250	2013	BY4122	S34002	WL4003	S34001		H025FID		BY4501	H060RID / WF4508		POW78		772CM46	772CM44	772SM1	886CM46	886CM44	886SM1	OKBY18 / OKS301 / OKS302 / OKWL01					886SM1		CRF R	250	2013
CRE	260	1995-1998													772CM46	772CM44	772SM1	701CM46	701CM44	701SM1						701SM1		CRE	260	1995-1998
CRE F 290 C	290	2007													772CM46	772CM44	772SM1	886CM46	886CM44	886SM1						886SM1		CRE F 290 C	290	2007
CRE F 300 X	300	2008-2009	BY4122	S34002	WL4003	S34001		H025FID		BY4501	H060RID / WF4508		POW78	POW79	772CM46	772CM44	772SM1	886CM46	886CM44	886SM1						886SM1		CRE F 300 X	300	2008-2009
CRE F	450	2002													772CM46	772CM44	772SM1	886CM46	886CM44	886SM1						886SM1		CRE F	450	2002
CRE F 450 R ENDURO	450	2004-2008	BY4122	S34002	WL4003	S34001		H025FID		BY4501	H060RID / WF4508		POW78	POW79	772CM46	772CM44	772SM1	886CM46	886CM44	886SM1						886SM1		CRE F 450 R ENDURO	450	2004-2008
CRE F 450 X	450	2004-2009	BY4122	S34002	WL4003	S34001		H025FID		BY4501	H060RID / WF4508		POW78	POW79	772CM46	772CM44	772SM1	886CM46	886CM44	886SM1						886SM1		CRE F 450 X	450	2004-2009
CRE R ENDURO	450	2002-2007													772CM46	772CM44	772SM1	886CM46	886CM44	886SM1						886SM1		CRE R ENDURO	450	2002-2007
CRF MOTARD	450	2004-2006													772CM46	772CM44	772SM1	886CM46	886CM44	886SM1						886SM1		CRF MOTARD	450	2004-2006
CRF R	450	2004-2014	BY4122	S34002	WL4003	S34001		H025FID		BY4501	H060RID / WF4508		POW78	POW79	772CM46	772CM44	772SM1	886CM46	886CM44	886SM1	OKBY18 / OKS301 / OKS302 / OKWL01					886SM1		CRF R	450	2004-2014
CRE F 490 X	490	2007	BY4122	S34002	WL4003	S34001		H025FID		BY4501	H060RID / WF4508		POW78	POW79	772CM46	772CM44	772SM1	886CM46	886CM44	886SM1						886SM1		CRE F 490 X	490	2007
CRE F 500 X	500	2008-2009	BY4122	S34002	WL4003	S34001		H025FID		BY4501	H060RID / WF4508		POW78	POW79	772CM46	772CM44	772SM1	886CM46	886CM44	886SM1						886SM1		CRE F 500 X	500	2008-2009
CRM F 500 X	500	2011	BY4122	S34002	WL4003	S34001		H025FID		BY4501	H060RID / WF4508		POW78	POW79				886CM46	886CM44	886SM1				932CM66	932CM55	886SM1		CRM F 500 X	500	2011
HRD																												HRD		
GS MC	80	1986-1988																		612SM1						612SM1		GS MC	80	1986-1988
GS-MC-HK	80	1989-1992																	669CM44	669SM1						669SM1		GS-MC-HK	80	1989-1992
GS 97	125	1997							YA10FI																			GS 97	125	1997
GS-MC	125	1986-1988																		612SM1						612SM1		GS-MC	125	1986-1988
GS-MC-HK	125	1989-1992																	669CM44	669SM1						669SM1		GS-MC-HK	125	1989-1992
GS 97	250	1997							YA10FI		YA10RID	YA10RI			746CM46	746CM44	746SM1	773CM46	773CM44	773SM1					746CM55	773SM1		GS 97	250	1997
GS-MC	250	1986-1988																		612SM1						612SM1		GS-MC	250	1986-1988
GS-MC-HK	250	1989-1992																	669CM44	669SM1						669SM1		GS-MC-HK	250	1989-1992
GS-HK	255	1991-1992																	669CM44	669SM1						669SM1		GS-HK	255	1991-1992
HUSABERG																												HUSABERG		
TE	125	2012-2014	BY4124	S34006	WL4007	S34005		KT02FID		BY4505	KT11RID / WF4505	KT11RI		PW4008	746CM46	746CM44	746SM1	891CM46	891CM44	891SM1	OKBY25 / OKS309 / OKWL14					891SM1		TE	125	2012-2014
FE	250	2013-2014	BY4124	S34006	WL4007	S34005		KT02FID		BY4505	KT11RID / WF4505	KT11RI		PW4008	746CM46	746CM44	746SM1	891CM46	891CM44	891SM1	OKBY25 / OKS309 / OKWL14					891SM1		FE	250	2013-2014
TE	250	2011-2014	BY4124	S34006	WL4007	S34005		KT02FID		BY4505	KT11RID / WF4505	KT11RI		PW4008	746CM46	746CM44	746SM1	891CM46	891CM44	891SM1	OKBY25 / OKS309 / OKWL14					891SM1		TE	250	2011-2014
TE	300	2011-2014	BY4124	S34006	WL4007	S34005		KT02FID		BY4505	KT11RID / WF4505	KT11RI		PW4008	746CM46	746CM44	746SM1	891CM46	891CM44	891SM1	OKBY25 / OKS309 / OKWL14					891SM1		TE	300	2011-2014
FE	350	1993													746CM46	746CM44	746SM1		669CM44	669SM1					746CM55	669SM1		FE	350	1993
FE	350	1994-1999													746CM46	746CM44	746SM1	773CM46	773CM44	773SM1					746CM55	773SM1		FE	350	1994-1999
FE	350	2013-2014	BY4124	S34006	WL4007	S34005		KT02FID		BY4505	KT11RID / WF4505	KT11RI		PW4008	746CM46	746CM44	746SM1	891CM46	891CM44	891SM1	OKBY25 / OKS309 / OKWL14					891SM1		FE	350	2013-2014
MC	350	1990-1992																	669CM44	669SM1						669SM1		MC	350	1990-1992
FE	390	2010	BY4124	S34006	WL4007	S34005		KT02FID		BY4505	KT11RID / WF4505	KT11RI		PW4008	746CM46	746CM44	746SM1	891CM46	891CM44	891SM1	OKBY25 / OKS309 / OKWL14				746CM55	891SM1		FE	390	2010
FE	390	2011	BY4124	S34006	WL4007	S34005		KT02FID		BY4505	KT11RID / WF4505	KT11RI		PW4008	746CM46	746CM44	746SM1	891CM46	891CM44	891SM1					746CM55	891SM1		FE	390	2011
FE	390	2012	BY4124	S34006	WL4007	S34005		KT02FID		BY4505	KT11RID / WF4505	KT11RI		PW4008	746CM46	746CM44	746SM1	891CM46	891CM44	891SM1	OKBY25 / OKS309 / OKWL14				746CM55	891SM1		FE	390	2012
FE	400	1998-1999													746CM46	746CM44	746SM1	773CM46	773CM44	773SM1					746CM55	773SM1		FE	400	1998-1999
FE	400	2000-2003	BY4124	S34006	WL4007	S34005		KT02FID		BY4505	KT11RID / WF4505	KT11RI		POW68	746CM46	746CM44	746SM1	773CM46	773CM44	773SM1	OKBY19 / OKS303 / OKWL03		WK115L		746CM55	773SM1	POW81	FE	400	2000-2003
FE E	400	2001-2003	BY4124	S34006	WL4007	S34005		KT02FID		BY4505	KT11RID / WF4505	KT11RI		POW68	746CM46	746CM44	746SM1	773CM46	773CM44	773SM1	OKBY19 / OKS303 / OKWL03		WK115L		746CM55	773SM1	POW81	FE E	400	2001-2003
FC	450	1993													746CM46	746CM44	746SM1		669CM44	669SM1					746CM55	669SM1		FC	450	1993
FC	450	1994-2005													746CM46	746CM44	746SM1	773CM46	773CM44	773SM1					746CM55	773SM1		FC	450	1994-2005
FE	450	2009-2014	BY4124	S34006	WL4007	S34005		KT02FID		BY4505	KT11RID / WF4505	KT11RI		PW4008	746CM46	746CM44	746SM1	891CM46	891CM44	891SM1	OKBY25 / OKS309 / OKWL14					891SM1		FE	450	2009-2014
FE E	450	2004													746CM46	746CM44	746SM1	773CM46	773CM44	773SM1					746CM55	773SM1	POW81	FE E	450	2004
FE E	450	2005-2008													746CM46	746CM44	746SM1	773CM46	773CM44	773SM1					746CM55	773SM1		FE E	450	2005-2008

OFFROAD / FUORISTRADA			DISCHI / DISKS										SUPPORTI PINZA BRACKETS CALIPER	
			ANTERIORE / FRONT							POSTERIORE / REAR			DISK Ø260	DISK Ø270
MODELLO MODEL	CC	ANNO YEAR	BATFLY ALUMINIUM Ø270	S3 BATFLY CROSS Ø270	W-FLO Ø270	S3 BATFLY CROSS Ø260	W-FLO Ø260	W-FIX ØOEM	R-FIX ØOEM	BATFLY	W-FIX / W-FULL	R-FIX	Per pinza originale / For oem caliper	Per pinza originale / For oem caliper
FX	450	2010	BY4124	S34006	WL4007	S34005		KT02FID		BY4505	KT11RID / WF4505	KT11RI		PW4008
FX E	450	2003-2005												
FC	470	2001-2002	BY4124	S34006	WL4007	S34005		KT02FID						POW68
FX E	470	2001-2002												
FC	501	1999-2003	BY4124	S34006	WL4007	S34005		KT02FID		BY4505	KT11RID / WF4505	KT11RI		POW68
FE	501	1993												
FE	501	1994-1998												
FE E	501	1999-2004	BY4124	S34006	WL4007	S34005		KT02FID		BY4505	KT11RID / WF4505	KT11RI		POW68
MC	501	1990-1992												
FE	510	2013-2014	BY4124	S34006	WL4007	S34005		KT02FID		BY4505	KT11RID / WF4505	KT11RI		PW4008
FC	550	2001-2005	BY4124	S34006	WL4007	S34005		KT02FID		BY4505	KT11RID / WF4505	KT11RI		POW68
FE E	550	2004-2008	BY4124	S34006	WL4007	S34005		KT02FID		BY4505	KT11RID / WF4505	KT11RI		POW68
FE	570	2010-2012	BY4124	S34006	WL4007	S34005		KT02FID		BY4505	KT11RID / WF4505	KT11RI		PW4008
FC	600	1993												
FC	600	1994-1998												
FC	600	1999-2003	BY4124	S34006	WL4007	S34005		KT02FID		BY4505	KT11RID / WF4505	KT11RI		POW68
FE E	600	1999-2002	BY4124	S34006	WL4007	S34005		KT02FID		BY4505	KT11RID / WF4505	KT11RI		POW68
FE E	650	2001-2008	BY4124	S34006	WL4007	S34005		KT02FID		BY4505	KT11RID / WF4505	KT11RI		POW68
FX E	650	2001-2005	BY4124	S34006	WL4007	S34005		KT02FID		BY4505	KT11RID / WF4505	KT11RI		POW68
HUSQVARNA														
WXE	50	2000												
CR	65	2011-2012						KT06FID						
TC 17/14	85	2014						WF4102			WF4509			
TC 19/16	85	2014						WF4102			WF4509			
CR	125	1984-1985												
CR	125	1990-1994												
CR	125	2000-2004					WL4005				HU09RID			
CR	125	2005-2006	BY4123	S34004			WL4005			BY4504	WF4501 / WF4506			POW68
CR	125	2007-2010	BY4123	S34004			WL4005			BY4504	WF4501 / WF4506			
CR	125	2011	BY4123	S34004			WL4005			BY4504	WF4501 / WF4506			POW68
CR	125	2012	BY4123	S34004			WL4005			BY4504	WF4501 / WF4506			POW68
SM S	125	1995-1999												
SM S	125	2000-2009					WL4005				HU09RID			
SM S	125	2010-2012					WL4005				HU09RID			
SMS4	125	2010-2011					WL4005				HU09RID			
TC	125	2014	BY4124	S34006	WL4007	S34005		KT02FID		BY4505	KT11RID / WF4505	KT11RI		PW4008
TC	125	2015	BY4124	S34006	WL4007	S34005		KT02FID		BY4505	KT11RID / WF4505	KT11RI		
TE	125	2010-2013	BY4123	S34004			WL4005				HU09RID			POW68
TE	125	2014	BY4124	S34006	WL4007	S34005		KT02FID		BY4505	KT11RID / WF4505	KT11RI		PW4008
WR	125	1985-1986												
WR	125	1990-1994												
WR	125	1995-1999												
WR	125	2000-2005									HU09RID			
WR	125	2006-2012	BY4123	S34004			WL4005			BY4504	WF4501 / WF4506			POW68
WR E	125	1995-1999												
WR E	125	2000-2012					WL4005				HU09RID			
WR	240	1984-1986												
CR	250	1984-1986												
CR	250	1990-1994												
CR	250	1995-1999												
CR	250	2000-2004	BY4123	S34004			WL4005							
CR	250	2005-2011	BY4123	S34004			WL4005			BY4504	WF4501 / WF4506			POW68
FC	250	2014	BY4124	S34006	WL4007	S34005		KT02FID		BY4505	KT11RID / WF4505	KT11RI		PW4008
FE	250	2014-2015	BY4124	S34006	WL4007	S34005		KT02FID		BY4505	KT11RID / WF4505	KT11RI		PW4008
TC	250	2004-2006					WL4005			BY4504	WF4501 / WF4506			
TC	250	2007-2013	BY4123	S34004			WL4005			BY4504	WF4501 / WF4506			POW68
TC	250	2014	BY4124	S34006	WL4007	S34005		KT02FID		BY4505	KT11RID / WF4505	KT11RI		PW4008
TE	250	2004-2006	BY4123	S34004			WL4005				HU09RID			POW68
TE	250	2007-2010	BY4123	S34004			WL4005				WF4501 / WF4506			POW68
TE	250	2011-2013	BY4123	S34004			WL4005				WF4501 / WF4506			PW4008
TE	250	2014	BY4124	S34006	WL4007	S34005		KT02FID		BY4505	KT11RID / WF4505	KT11RI		PW4008
TXC	250	2011	BY4123	S34004			WL4005			BY4504	WF4501 / WF4506			POW68
WR	250	1990-1994												
WR	250	1995-1999												
WR	250	2000-2004	BY4123	S34004		S34003	WL4005							
WR	250	2005-2013	BY4123	S34004		S34003	WL4005				WF4510			POW68

PASTIGLIE / PADS			PASTIGLIE / PADS			KIT MAGGIORAZIONE OVERSIZE KIT		TRASFORMAZIONE MOTARD MOTARD TRASFORMATION: DISCO DISK	PASTIGLIE PADS			SUPPORTO PINZA BRACKET CALIPER	OFFROAD / FUORISTRADA		
ANTERIORE / FRONT			POSTERIORE / REAR			ANTERIORE FRONT	POSTERIORE REAR	ANTERIORE FRONT	ANTERIORE FRONT		POSTERIORE REAR	DISK Ø320			
CM46	CM44	SM1	CM46	CM44	SM1	OKI	OKI	SK2	CM66	CM55	SM1	Per pinza originale For oem caliper	MODELLO MODEL	CC	ANNO YEAR
746CM46	746CM44	746SM1	891CM46	891CM44	891SM1	OKBY25 / OKS309 / OKWL14				746CM55	891SM1		FX	450	2010
746CM46	746CM44	746SM1	773CM46	773CM44	773SM1					746CM55	773SM1		FX E	450	2003-2005
746CM46	746CM44	746SM1	773CM46	773CM44	773SM1	OKBY19 / OKS303 / OKWL03		WK115L		746CM55	773SM1	POW81	FC	470	2001-2002
746CM46	746CM44	746SM1	773CM46	773CM44	773SM1					746CM55	773SM1		FX E	470	2001-2002
746CM46	746CM44	746SM1	773CM46	773CM44	773SM1	OKBY19 / OKS303 / OKWL03		WK115L		746CM55	773SM1	POW81	FC	501	1999-2003
746CM46	746CM44	746SM1		669CM44	669SM1					746CM55	669SM1		FE	501	1993
746CM46	746CM44	746SM1	773CM46	773CM44	773SM1					746CM55	773SM1		FE	501	1994-1998
746CM46	746CM44	746SM1	773CM46	773CM44	773SM1	OKBY19 / OKS303 / OKWL03		WK115L		746CM55	773SM1	POW81	FE E	501	1999-2004
				669CM44	669SM1						669SM1		MC	501	1990-1992
746CM46	746CM44	746SM1	891CM46	891CM44	891SM1	OKBY25 / OKS309 / OKWL14					891SM1		FE	510	2013-2014
746CM46	746CM44	746SM1	773CM46	773CM44	773SM1	OKBY19 / OKS303 / OKWL03		WK115L		746CM55	773SM1	POW81	FC	550	2001-2005
746CM46	746CM44	746SM1	773CM46	773CM44	773SM1	OKBY19 / OKS303 / OKWL03		WK115L		746CM55	773SM1	POW81	FE E	550	2004-2008
746CM46	746CM44	746SM1	891CM46	891CM44	891SM1	OKBY25 / OKS309 / OKWL14				746CM55	891SM1		FE	570	2010-2012
746CM46	746CM44	746SM1		669CM44	669SM1					746CM55	669SM1		FC	600	1993
746CM46	746CM44	746SM1	773CM46	773CM44	773SM1					746CM55	773SM1		FC	600	1994-1998
746CM46	746CM44	746SM1	773CM46	773CM44	773SM1	OKBY19 / OKS303 / OKWL03		WK115L		746CM55	773SM1	POW81	FC	600	1999-2003
746CM46	746CM44	746SM1	773CM46	773CM44	773SM1	OKBY19 / OKS303 / OKWL03		WK115L		746CM55	773SM1	POW81	FE E	600	1999-2002
746CM46	746CM44	746SM1	773CM46	773CM44	773SM1	OKBY19 / OKS303 / OKWL03		WK115L		746CM55	773SM1	POW81	FE E	650	2001-2008
746CM46	746CM44	746SM1	773CM46	773CM44	773SM1	OKBY19 / OKS303 / OKWL03		WK115L		746CM55	773SM1	POW81	FX E	650	2001-2005
													HUSQVARNA		
					621SM1						621SM1		WXE	50	2000
	873CM44			949CM44									CR	65	2011-2012
	955CM44			949CM44									TC 17/14	85	2014
	955CM44			949CM44									TC 19/16	85	2014
		612SM1											CR	125	1984-1985
				669CM44	669SM1						669SM1		CR	125	1990-1994
746CM46	746CM44	746SM1	773CM46	773CM44	773SM1			WK087L		746CM55	773SM1		CR	125	2000-2004
746CM46	746CM44	746SM1	891CM46	891CM44	891SM1	OKBY26 / OKS310		WK087L		746CM55	891SM1		CR	125	2005-2006
746CM46	746CM44	746SM1	891CM46	891CM44	891SM1	OKBY26 / OKS310		WK087L		746CM55	891SM1		CR	125	2007-2010
746CM46	746CM44	746SM1	891CM46	891CM44	891SM1					746CM55	891SM1		CR	125	2011
746CM46	746CM44	746SM1	891CM46	891CM44	891SM1	OKBY26 / OKS310		WK087L		746CM55	891SM1		CR	125	2012
746CM46	746CM44	746SM1	773CM46	773CM44	773SM1			WK053L		746CM55	773SM1		SM S	125	1995-1999
746CM46	746CM44	746SM1	773CM46	773CM44	773SM1			WK087L		746CM55	773SM1		SM S	125	2000-2009
746CM46	746CM44	746SM1	773CM46	773CM44	773SM1					746CM55	773SM1		SM S	125	2010-2012
746CM46	746CM44	746SM1	773CM46	773CM44	773SM1			WK087L		746CM55	773SM1		SMS4	125	2010-2011
746CM46	746CM44	746SM1	891CM46	891CM44	891SM1	OKBY25 / OKS309 / OKWL14	OKI80	WK115L		746CM55	891SM1		TC	125	2014
746CM46	746CM44	746SM1	891CM46	891CM44	891SM1	OKBY25 / OKS309 / OKWL14	OKI80	WK115L		746CM55	891SM1		TC	125	2015
746CM46	746CM44	746SM1	773CM46	773CM44	773SM1	OKBY26 / OKS310		WK087L		746CM55	773SM1	POW81	TE	125	2010-2013
746CM46	746CM44	746SM1	891CM46	891CM44	891SM1	OKBY25 / OKS309 / OKWL14	OKI80	WK115L		746CM55	891SM1	POW81	TE	125	2014
		612SM1											WR	125	1985-1986
				669CM44	669SM1						669SM1		WR	125	1990-1994
746CM46	746CM44	746SM1	773CM46	773CM44	773SM1			WK053L		746CM55	773SM1		WR	125	1995-1999
746CM46	746CM44	746SM1	773CM46	773CM44	773SM1			WK087L		746CM55	773SM1		WR	125	2000-2005
746CM46	746CM44	746SM1	891CM46	891CM44	891SM1	OKBY26 / OKS310		WK087L		746CM55	891SM1		WR	125	2006-2012
746CM46	746CM44	746SM1	773CM46	773CM44	773SM1					746CM55	773SM1		WR E	125	1995-1999
746CM46	746CM44	746SM1	773CM46	773CM44	773SM1			WK087L		746CM55	773SM1		WR E	125	2000-2012
		612SM1											WR	240	1984-1986
		612SM1											CR	250	1984-1986
				669CM44	669SM1						669SM1		CR	250	1990-1994
746CM46	746CM44	746SM1	773CM46	773CM44	773SM1			WK053L		746CM55	773SM1		CR	250	1995-1999
746CM46	746CM44	746SM1	773CM46	773CM44	773SM1			WK087L		746CM55	773SM1		CR	250	2000-2004
746CM46	746CM44	746SM1	773CM46	773CM44	773SM1	OKBY26 / OKS310		WK087L		746CM55	773SM1		CR	250	2005-2011
746CM46	746CM44	746SM1	891CM46	891CM44	891SM1	OKBY25 / OKS309 / OKWL14	OKI80	WK115L		746CM55	891SM1		FC	250	2014
746CM46	746CM44	746SM1	891CM46	891CM44	891SM1	OKBY25 / OKS309 / OKWL14		WK115L		746CM55	891SM1		FE	250	2014-2015
746CM46	746CM44	746SM1	891CM46	891CM44	891SM1			WK087L		746CM55	891SM1		TC	250	2004-2006
746CM46	746CM44	746SM1	891CM46	891CM44	891SM1	OKBY26 / OKS310		WK087L		746CM55	891SM1		TC	250	2007-2013
746CM46	746CM44	746SM1	891CM46	891CM44	891SM1	OKBY25 / OKS309 / OKWL14	OKI80	WK115L		746CM55	891SM1		TC	250	2014
746CM46	746CM44	746SM1	891CM46	891CM44	891SM1			WK087L		746CM55	891SM1		TE	250	2004-2006
746CM46	746CM44	746SM1	891CM46	891CM44	891SM1			WK087L		746CM55	891SM1		TE	250	2007-2010
746CM46	746CM44	746SM1	891CM46	891CM44	891SM1			WK087L		746CM55	891SM1		TE	250	2011-2013
746CM46	746CM44	746SM1	891CM46	891CM44	891SM1	OKBY25 / OKS309 / OKWL14	OKI80	WK115L		746CM55	891SM1		TE	250	2014
746CM46	746CM44	746SM1	891CM46	891CM44	891SM1	OKBY26 / OKS310		WK087L		746CM55	891SM1		TXC	250	2011
				669CM44	669SM1						669SM1		WR	250	1990-1994
746CM46	746CM44	746SM1	773CM46	773CM44	773SM1			WK053L		746CM55	773SM1		WR	250	1995-1999
746CM46	746CM44	746SM1	773CM46	773CM44	773SM1			WK087L		746CM55	773SM1		WR	250	2000-2004
746CM46	746CM44	746SM1	773CM46	773CM44	773SM1	OKBY26 / OKS310		WK087L		746CM55	773SM1		WR	250	2005-2013

OFFROAD / FUORISTRADA														
			DISCHI / DISKS										SUPPORTI PINZA BRACKETS CALIPER	
			ANTERIORE / FRONT							POSTERIORE / REAR			DISK Ø260	DISK Ø270
MODELLO MODEL	CC	ANNO YEAR	BATFLY ALUMINIUM Ø270	S3 BATFLY CROSS Ø270	W-FLO Ø270	S3 BATFLY CROSS Ø260	W-FLO Ø260	W-FIX ØOEM	R-FIX ØOEM	BATFLY	W-FIX / W-FULL	R-FIX	Per pinza originale / For oem caliper	Per pinza originale / For oem caliper
WR	260	1990-1994												
TE	300	2014-2015	BY4124	S34006	WL4007	S34005		KT02FID		BY4505	KT11RID / WF4505	KT11RI		PW4008
WR	300	2009-2013	BY4123	S34004		S34003	WL4005				WF4510			POW68
TE	310	2009					WL4005							PW4008
TE	310	2010-2012	BY4123	S34004			WL4005							PW4008
TE	310	2013					WL4005							PW4008
TXC	310	2011	BY4123	S34004			WL4005			BY4504	WF4501 / WF4506			POW68
FC	350	2014-2015	BY4124	S34006	WL4007	S34005		KT02FID		BY4505	KT11RID / WF4505	KT11RI		PW4008
FE	350	2014	BY4124	S34006	WL4007	S34005		KT02FID		BY4505	KT11RID / WF4505	KT11RI		PW4008
TE	350	1989-1991												
TE	350	1992-1994												
TE	350	1995-1996												
CR	360	1992-1994												
WR	360	1992-1994												
WR	360	1995-1999												
WR	360	2000-2004				S34003	WL4005				WF4510			
ENDURO	400	1985-1986												
TE	410	1995-1999												
TE	410	2000-2001				S34003	WL4005				WF4510			
TC	449	2011-2013	BY4123	S34004		S34003	WL4005			BY4504	WF4501 / WF4506			PW4008
TE	449	2011-2013	BY4123	S34004		S34003	WL4005			BY4504	WF4501 / WF4506			
FC	450	2014-2015	BY4124	S34006	WL4007	S34005		KT02FID		BY4505	KT11RID / WF4505	KT11RI		PW4008
FE	450	2014-2015	BY4124	S34006	WL4007	S34005		KT02FID		BY4505	KT11RID / WF4505	KT11RI		PW4008
TC	450	2002-2006				S34003	WL4005							
TC	450	2007-2010	BY4123	S34004		S34003	WL4005			BY4504	WF4501 / WF4506			POW68
TE	450	2002-2005				S34003	WL4005				HU09RID			
TE	450	2006	BY4123	S34004		S34003	WL4005			BY4504	WF4501 / WF4506			POW68
TE	450	2007-2010	BY4123	S34004		S34003	WL4005			BY4504	WF4501 / WF4506			POW68
TXC	450	2011-2012	BY4123	S34004			WL4005			BY4504	WF4501 / WF4506			PW4008
TXC	480	2013	BY4123	S34004		S34003	WL4005			BY4504	WF4501 / WF4506			PW4008
CR	500	1984-1986												
TC	500	1986-1987												
504	504	1983-1985												
ENDURO	510	1984-1986												
FE	510	2014	BY4124	S34006	WL4007	S34005		KT02FID		BY4505	KT11RID / WF4505	KT11RI		PW4008
TC	510	2002-2004	BY4123	S34004		S34003	WL4005				HU09RID			
TC	510	2005	BY4123	S34004		S34003	WL4005							
TC	510	2006	BY4123	S34004		S34003	WL4005							POW68
TC	510	2007-2009	BY4123	S34004		S34003	WL4005			BY4504	WF4501 / WF4506			POW68
TE	510	1986-1987												
TE	510	1990-1991												
TE	510	2002-2005				S34003	WL4005				HU09RID			
TE	510	2006	BY4123	S34004						BY4504	WF4501 / WF4506			POW68
TE	510	2007-2010	BY4123	S34004			WL4005			BY4504	WF4501 / WF4506			POW68
TE Centennial	510	2004									HU09RID			
TXC	510	2009-2010	BY4123	S34004		S34003	WL4005			BY4504	WF4501 / WF4506			
TE	511	2011-2012	BY4123	S34004		S34003	WL4005			BY4504	WF4501 / WF4506			PW4008
TE	511	2013	BY4123	S34004		S34003	WL4005			BY4504	WF4501 / WF4506			PW4008
TXC	511	2011-2013	BY4123	S34004		S34003	WL4005			BY4504	WF4501 / WF4506			PW4008
TC	570	2000-2003				S34003	WL4005				WF4510			
TE	570	2001-2004									WF4510			
TC 610	600	1991												
TC 610	600	1992-1994												
TE 610	600	1991												
TE 610	600	1992-1994												
TE 610 E	600	1998-1999												
WRK	600	1989-1990												
SM S	610	2000-2004												
TC	610	1995-1999												
TC	610	2000-2004									HU09RID			
TE	610	1995-1999												
TE	610	2000-2004									HU09RID			
TE E	610	2005-2006									HU09RID			
TE E	610	2007				S34003	WL4005				HU09RID			
TE ie	610	2006-2007												
TE	630	2010-2012				S34003	WL4005				HU09RID			

PASTIGLIE / PADS			PASTIGLIE / PADS			KIT MAGGIORAZIONE OVERSIZE KIT		TRASFORMAZIONE MOTARD MOTARD TRASFORMATION					OFFROAD / FUORISTRADA		
								DISCO DISK	PASTIGLIE PADS			SUPPORTO PINZA BRACKET CALIPER			
ANTERIORE / FRONT			POSTERIORE / REAR			ANTERIORE FRONT	POSTERIORE REAR	ANTERIORE FRONT	ANTERIORE FRONT		POSTERIORE REAR	DISK Ø320			
CM46	CM44	SM1	CM46	CM44	SM1	OKI	OKI	SK2	CM66	CM55	SM1	Per pinza originale For oem caliper	MODELLO MODEL	CC	ANNO YEAR
				669CM44	669SM1						669SM1		WR	260	1990-1994
746CM46	746CM44	746SM1	891CM46	891CM44	891SM1	OKBY25 / OKS309 / OKWL14	OKI80	WK115L		746CM55	891SM1		TE	300	2014-2015
746CM46	746CM44	746SM1	773CM46	773CM44	773SM1	OKBY26 / OKS310		WK087L		746CM55	773SM1		WR	300	2009-2013
746CM46	746CM44	746SM1	891CM46	891CM44	891SM1			WK087L		746CM55	891SM1		TE	310	2009
746CM46	746CM44	746SM1	891CM46	891CM44	891SM1			WK087L		746CM55	891SM1		TE	310	2010-2012
746CM46	746CM44	746SM1	891CM46	891CM44	891SM1			WK087L		746CM55	891SM1		TE	310	2013
746CM46	746CM44	746SM1	891CM46	891CM44	891SM1	OKBY26 / OKS310		WK087L		746CM55	891SM1		TXC	310	2011
746CM46	746CM44	746SM1	891CM46	891CM44	891SM1	OKBY25 / OKS309 / OKWL14	OKI80	WK115L		746CM55	891SM1		FC	350	2014-2015
746CM46	746CM44	746SM1	891CM46	891CM44	891SM1	OKBY25 / OKS309 / OKWL14		WK115L		746CM55	891SM1		FE	350	2014
				669CM44	669SM1						669SM1		TE	350	1989-1991
	696CM44	696SM1	686CM46	686CM44	686SM1						686SM1		TE	350	1992-1994
746CM46	746CM44	746SM1	773CM46	773CM44	773SM1					746CM55	773SM1		TE	350	1995-1996
	696CM44	696SM1	686CM46	686CM44	686SM1						686SM1		CR	360	1992-1994
	696CM44	696SM1	686CM46	686CM44	686SM1						686SM1		WR	360	1992-1994
								WK053L					WR	360	1995-1999
746CM46	746CM44	746SM1	773CM46	773CM44	773SM1					746CM55	773SM1		WR	360	2000-2004
		612SM1											ENDURO	400	1985-1986
746CM46	746CM44	746SM1	773CM46	773CM44	773SM1			WK053L		746CM55	773SM1		TE	410	1995-1999
746CM46	746CM44	746SM1	773CM46	773CM44	773SM1			WK059L		746CM55	773SM1		TE	410	2000-2001
746CM46	746CM44	746SM1	891CM46	891CM44	891SM1						891SM1		TC	449	2011-2013
746CM46	746CM44	746SM1	891CM46	891CM44	891SM1						891SM1		TE	449	2011-2013
746CM46	746CM44	746SM1	891CM46	891CM44	891SM1	OKBY25 / OKS309 / OKWL14	OKI80	WK115L		746CM55	891SM1		FC	450	2014-2015
746CM46	746CM44	746SM1	891CM46	891CM44	891SM1	OKBY25 / OKS309 / OKWL14		WK115L		746CM55	891SM1		FE	450	2014-2015
746CM46	746CM44	746SM1	891CM46	891CM44	891SM1			WK087L			891SM1		TC	450	2002-2006
746CM46	746CM44	746SM1	891CM46	891CM44	891SM1	OKBY26 / OKS310		WK087L			891SM1	POW81	TC	450	2007-2010
746CM46	746CM44	746SM1	773CM46	773CM44	773SM1			WK087L		746CM55	773SM1		TE	450	2002-2005
746CM46	746CM44	746SM1	891CM46	891CM44	891SM1			WK087L		746CM55	891SM1	POW81	TE	450	2006
746CM46	746CM44	746SM1	891CM46	891CM44	891SM1	OKBY26 / OKS310		WK087L		746CM55	891SM1	POW81	TE	450	2007-2010
746CM46	746CM44		891CM46	891CM44	891SM1					746CM55	891SM1		TXC	450	2011-2012
746CM46	746CM44	746SM1	891CM46	891CM44	891SM1						891SM1		TXC	450	2013
		612SM1											CR	500	1984-1986
		612SM1											TC	500	1986-1987
		612SM1											504	504	1983-1985
		612SM1											ENDURO	510	1984-1986
746CM46	746CM44	746SM1	891CM46	891CM44	891SM1	OKBY25 / OKS309 / OKWL14		WK115L		746CM55	891SM1		FE	510	2014
746CM46	746CM44	746SM1	773CM46	773CM44	773SM1			WK087L		746CM55	773SM1		TC	510	2002-2004
746CM46	746CM44	746SM1						WK087L		746CM55			TC	510	2005
746CM46	746CM44	746SM1						WK087L		746CM55			TC	510	2006
746CM46	746CM44	746SM1	891CM46	891CM44	891SM1	OKBY26 / OKS310		WK087L		746CM55	891SM1	POW81	TC	510	2007-2009
		612SM1											TE	510	1986-1987
				669CM44	669SM1						669SM1		TE	510	1990-1991
746CM46	746CM44	746SM1	891CM46	891CM44	891SM1			WK087L		746CM55	891SM1		TE	510	2002-2005
746CM46	746CM44	746SM1	891CM46	891CM44	891SM1	OKBY26 / OKS310		WK087L		746CM55	891SM1	POW81	TE	510	2006
746CM46	746CM44	746SM1	891CM46	891CM44	891SM1	OKBY26 / OKS310		WK087L		746CM55	891SM1	POW81	TE	510	2007-2010
746CM46	746CM44	746SM1	773CM46	773CM44	773SM1			WK059L		746CM55	773SM1		TE Centennial	510	2004
746CM46	746CM44		891CM46	891CM44	891SM1						891SM1		TXC	510	2009-2010
746CM46	746CM44	746SM1	891CM46	891CM44	891SM1						891SM1		TE	511	2011-2012
746CM46	746CM44	746SM1	891CM46	891CM44									TE	511	2013
746CM46	746CM44		891CM46	891CM44	891SM1						891SM1		TXC	511	2011-2013
746CM46	746CM44	746SM1	773CM46	773CM44	773SM1			WK059L		746CM55	773SM1		TC	570	2000-2003
746CM46	746CM44	746SM1	773CM46	773CM44	773SM1			WK059L		746CM55	773SM1		TE	570	2001-2004
				669CM44	669SM1						669SM1		TC 610	600	1991
	696CM44	696SM1	686CM46	686CM44	686SM1						686SM1		TC 610	600	1992-1994
				669CM44	669SM1						669SM1		TE 610	600	1991
	696CM44	696SM1	686CM46	686CM44	686SM1						686SM1		TE 610	600	1992-1994
746CM46	746CM44	746SM1	773CM46	773CM44	773SM1					746CM55	773SM1		TE 610 E	600	1998-1999
				669CM44	669SM1						669SM1		WRK	600	1989-1990
		784SM1	773CM46	773CM44	773SM1				784CM66	784CM55	773SM1		SM S	610	2000-2004
746CM46	746CM44	746SM1	773CM46	773CM44	773SM1			WK053L		746CM55	773SM1		TC	610	1995-1999
746CM46	746CM44	746SM1	773CM46	773CM44	773SM1			WK059L		746CM55	773SM1		TC	610	2000-2004
746CM46	746CM44	746SM1	773CM46	773CM44	773SM1			WK053L		746CM55	773SM1		TE	610	1995-1999
746CM46	746CM44	746SM1	773CM46	773CM44	773SM1			WK059L		746CM55	773SM1		TE	610	2000-2004
746CM46	746CM44	746SM1	773CM46	773CM44	773SM1					746CM55	773SM1		TE E	610	2005-2006
746CM46	746CM44	746SM1	773CM46	773CM44	773SM1					746CM55	773SM1		TE E	610	2007
746CM46	746CM44	746SM1						WK087L		746CM55			TE ie	610	2006-2007
746CM46	746CM44	746SM1	773CM46	773CM44	773SM1			WK087L		746CM55	773SM1		TE	630	2010-2012

OFFROAD / FUORISTRADA

			DISCHI / DISKS										SUPPORTI PINZA BRACKETS CALIPER	
			ANTERIORE / FRONT							POSTERIORE / REAR			DISK Ø260	DISK Ø270
MODELLO MODEL	CC	ANNO YEAR	BATFLY ALUMINIUM Ø270	S3 BATFLY CROSS Ø270	W-FLO Ø270	S3 BATFLY CROSS Ø260	W-FLO Ø260	W-FIX ØOEM	R-FIX ØOEM	BATFLY	W-FIX / W-FULL	R-FIX	Per pinza originale / For oem caliper	Per pinza originale / For oem caliper
KAWASAKI														
KX	65	2000-2015						KW32RID			KW32RID			
KD	80	1988												
KX	80	1984-1987						KW18FID						
KX	80	1988-1992						KW18FID						
KX	80	1993-1996						KW18FID			SZ26RID			
KX	80	1997-1999						KW18FID			KW18RID			
KX	85	2000-2015						KW18FID			KW18RID			
KX	100	1988-1996												
KX	100	1997-2004												
KX	100	2005-2015						KW18FID			KW18RID			
KDX	125	1990-1999									KW04RID			
KDX	125	2000-2003												
KDX	125	2004-2006												
KLX	125	2010-2014												
KLX D-TRACKER	125	2010-2014												
KX	125	1983-1985												
KX	125	1986												
KX	125	1987-1988												
KX	125	1989-1993						KW01FID			KW01RID			
KX	125	1994						KW01FID			KW01RID			
KX	125	1995-2002						KW01FID			KW01RID			POW02
KX	125	2003-2005	BY4125	S34007				KW35FID		BY4502	KW41RID			POW02
KX	125	2006-2008	BY4126	S34008	WL4008			KW39FID		BY4502	KW41RID			POW02
KDX	200	1986-1988												
KDX	200	1989-2003												
KDX	200	2004-2006									KW01RID			
KDX	220	1994-1996									KW04RID			
KDX	220	1997-2002												
KDX	220	2003-2005									KW01RID			
KDX	250	1991-1993						KW01FID			KW04RID			
KDX	250	1994-1997												
KLX	250	1993-1994										KW19RI		
KLX R	250	1993-1994						KW01FID				KW19RI		POW02
KLX R	250	1995-1996						KW01FID						POW02
KLX S	250	2009-2014												
KX	250	1983												
KX	250	1984-1986												
KX	250	1987-1988						KW01FID						
KX	250	1989-1993						KW01FID			KW01RID			
KX	250	1994						KW01FID			KW01RID			POW02
KX	250	1995-2002						KW01FID			KW01RID			POW02
KX	250	2003-2005	BY4125	S34007				KW35FID		BY4502	KW41RID			POW02
KX	250	2006-2008	BY4126	S34008	WL4008			KW39FID		BY4502	KW41RID			POW02
KX F	250	1987-1988												
KX F	250	2004-2005	BY4125	S34007				KW35FID		BY4502	KW41RID			POW02
KX F	250	2006-2014	BY4126	S34008	WL4008			KW39FID		BY4502	KW41RID			POW02
KX F	250	2015	BY4126	S34008	WL4008					BY4502	KW41RID			POW02
KLX R	300	1997-2007						KW01FID			KW01RID			POW02
KLX R	400	2003-2007												
KLX R	450	2007-2012	BY4126	S34008	WL4008			KW39FID		BY4502	KW41RID			POW02
KLX R	450	2013-2014	BY4126	S34008	WL4008			KW39FID		BY4502	KW41RID			POW02
KX F	450	2006-2014	BY4126	S34008	WL4008			KW39FID		BY4502	KW41RID			POW02
KX F	450	2015	BY4126	S34008	WL4008					BY4502	KW41RID			POW02
KX	500	1983-1985												
KX	500	1986						KW01FID						
KX	500	1987-1988						KW01FID						
KX	500	1989-1993						KW01FID			KW01RID			
KX	500	1994-1995						KW01FID			KW01RID			POW02
KX	500	1996-2004						KW01FID			KW01RID			POW02
KLX	650	1993-1996										KW19RI		
KLX R	650	1993-1997						KW01FID			KW01RID			
KLX R	650	1998-2003									KW01RID			
KLX S	650	1993-1994												

PASTIGLIE / PADS			PASTIGLIE / PADS			KIT MAGGIORAZIONE OVERSIZE KIT		TRASFORMAZIONE MOTARD MOTARD TRASFORMATION					OFFROAD / FUORISTRADA		
ANTERIORE / FRONT			POSTERIORE / REAR			ANTERIORE FRONT	POSTERIORE REAR	DISCO DISK ANTERIORE FRONT	PASTIGLIE PADS ANTERIORE FRONT		PASTIGLIE PADS POSTERIORE REAR	SUPPORTO PINZA BRACKET CALIPER DISK Ø320			
CM46	CM44	SM1	CM46	CM44	SM1	OKI	OKI	SK2	CM66	CM55	SM1	Per pinza originale For oem caliper	MODELLO MODEL	CC	ANNO YEAR
													KAWASAKI		
	894CM44		686CM46	686CM44	686SM1						686SM1		KX	65	2000-2015
	702CM44	702SM1											KD	80	1988
	702CM44	702SM1											KX	80	1984-1987
	702CM44	702SM1	686CM46	686CM44	686SM1						686SM1		KX	80	1988-1992
	702CM44	702SM1	686CM46	686CM44	686SM1						686SM1		KX	80	1993-1996
	812CM44		686CM46	686CM44	686SM1						686SM1		KX	80	1997-1999
	812CM44		686CM46	686CM44	686SM1						686SM1		KX	85	2000-2015
	702CM44	702SM1	686CM46	686CM44	686SM1						686SM1		KX	100	1988-1996
	812CM44		686CM46	686CM44	686SM1						686SM1		KX	100	1997-2004
	812CM44		686CM46	686CM44	686SM1						686SM1		KX	100	2005-2015
	702CM44	702SM1		722CM44	722SM1						722SM1		KDX	125	1990-1999
	702CM44	702SM1		722CM44	722SM1						722SM1		KDX	125	2000-2003
				722CM44	722SM1						722SM1		KDX	125	2004-2006
	696CM44	696SM1		703CM44	703SM1						703SM1		KLX	125	2010-2014
	696CM44	696SM1		703CM44	703SM1						703SM1		KLX D-TRACKER	125	2010-2014
	669CM44	669SM1											KX	125	1983-1985
	669CM44	669SM1		669CM44	669SM1						669SM1		KX	125	1986
				669CM44	669SM1						669SM1		KX	125	1987-1988
	696CM44	696SM1		722CM44	722SM1						722SM1		KX	125	1989-1993
772CM46	772CM44	772SM1		722CM44	722SM1						722SM1		KX	125	1994
772CM46	772CM44	772SM1	701CM46	701CM44	701SM1						701SM1	POW84	KX	125	1995-2002
772CM46	772CM44	772SM1	701CM46	701CM44	701SM1	OKBY20 / OKS304					701SM1	POW84	KX	125	2003-2005
772CM46	772CM44	772SM1	701CM46	701CM44	701SM1	OKBY21 / OKS305 / OKWL04		WK126L			701SM1	POW84	KX	125	2006-2008
	669CM44	669SM1											KDX	200	1986-1988
	669CM44	669SM1		722CM44	722SM1						722SM1		KDX	200	1989-2003
	669CM44	669SM1		722CM44									KDX	200	2004-2006
772CM46	772CM44	772SM1		722CM44	722SM1						722SM1		KDX	220	1994-1996
772CM46	772CM44	772SM1		722CM44	722SM1						722SM1		KDX	220	1997-2002
772CM46	772CM44	772SM1		722CM44	722SM1						722SM1		KDX	220	2003-2005
	696CM44	696SM1		722CM44	722SM1						722SM1		KDX	250	1991-1993
	696CM44	696SM1		722CM44	722SM1						722SM1		KDX	250	1994-1997
													KLX	250	1993-1994
772CM46	772CM44	772SM1		722CM44	722SM1						722SM1	POW84	KLX R	250	1993-1994
772CM46	772CM44	772SM1		722CM44	722SM1						722SM1	POW84	KLX R	250	1995-1996
	696CM44	696SM1	701CM46	701CM44	701SM1						701SM1		KLX S	250	2009-2014
	702CM44	702SM1											KX	250	1983
	669CM44	669SM1											KX	250	1984-1986
				669CM44	669SM1						669SM1		KX	250	1987-1988
	696CM44	696SM1		722CM44	722SM1						722SM1		KX	250	1989-1993
772CM46	772CM44	772SM1		722CM44	722SM1						722SM1	POW84	KX	250	1994
772CM46	772CM44	772SM1	701CM46	701CM44	701SM1						701SM1	POW84	KX	250	1995-2002
772CM46	772CM44	772SM1	701CM46	701CM44	701SM1	OKBY20 / OKS304					701SM1	POW84	KX	250	2003-2005
772CM46	772CM44	772SM1	701CM46	701CM44	701SM1	OKBY21 / OKS305 / OKWL04		WK126L			701SM1	POW84	KX	250	2006-2008
	669CM44	669SM1	686CM46	686CM44	686SM1						686SM1		KX F	250	1987-1988
772CM46	772CM44	772SM1	890CM46	890CM44	890SM1	OKBY20 / OKS304					890SM1	POW84	KX F	250	2004-2005
772CM46	772CM44	772SM1	890CM46	890CM44	890SM1	OKBY21 / OKS305 / OKWL04		WK126L			890SM1	POW84	KX F	250	2006-2014
772CM46	772CM44	772SM1	890CM46	890CM44	890SM1	OKBY21 / OKS305 / OKWL04		WK126L			890SM1	POW84	KX F	250	2015
772CM46	772CM44	772SM1	701CM46	701CM44	701SM1						701SM1	POW84	KLX R	300	1997-2007
772CM46	772CM44	772SM1	701CM46	701CM44	701SM1						701SM1		KLX R	400	2003-2007
772CM46	772CM44	772SM1	890CM46	890CM44	890SM1	OKBY21 / OKS305 / OKWL04		WK126L			890SM1	POW84	KLX R	450	2007-2012
772CM46	772CM44	772SM1	890CM46	890CM44	890SM1	OKBY21 / OKS305 / OKWL04					890SM1	POW84	KLX R	450	2013-2014
772CM46	772CM44	772SM1	890CM46	890CM44	890SM1	OKBY21 / OKS305 / OKWL04		WK126L			890SM1	POW84	KX F	450	2006-2014
772CM46	772CM44	772SM1	890CM46	890CM44	890SM1	OKBY21 / OKS305 / OKWL04		WK126L			890SM1	POW84	KX F	450	2015
	669CM44	669SM1											KX	500	1983-1985
	669CM44	669SM1		669CM44	669SM1						669SM1		KX	500	1986
				669CM44	669SM1						669SM1		KX	500	1987-1988
	696CM44	696SM1		722CM44	722SM1						722SM1		KX	500	1989-1993
772CM46	772CM44	772SM1		722CM44	722SM1						722SM1	POW84	KX	500	1994-1995
772CM46	772CM44	772SM1	701CM46	701CM44	701SM1						701SM1	POW84	KX	500	1996-2004
772CM46	772CM44	772SM1		722CM44	722SM1						722SM1		KLX	650	1993-1996
772CM46	772CM44	772SM1		722CM44	722SM1						722SM1	POW84	KLX R	650	1993-1997
772CM46	772CM44	772SM1		722CM44	722SM1						722SM1	POW84	KLX R	650	1998-2003
772CM46	772CM44	772SM1		722CM44	722SM1						722SM1		KLX S	650	1993-1994

OFFROAD / FUORISTRADA

			DISCHI / DISKS										SUPPORTI PINZA BRACKETS CALIPER	
			ANTERIORE / FRONT							POSTERIORE / REAR			DISK Ø260	DISK Ø270
MODELLO MODEL	CC	ANNO YEAR	BATFLY ALUMINIUM Ø270	S3 BATFLY CROSS Ø270	W-FLO Ø270	S3 BATFLY CROSS Ø260	W-FLO Ø260	W-FIX ØOEM	R-FIX ØOEM	BATFLY	W-FIX / W-FULL	R-FIX	Per pinza originale / For oem caliper	Per pinza originale / For oem caliper
KRAMIT														
ER- MC	125	1989-1993												
ER- MC	250	1990-1992												
GS- MX	250	1997												
SM	250	1997												
KTM														
COMET	50	1982-1985												
EXC	50	1995-1998												
EXC	50	1999												
LC	50	2002-2005												
MX	50	1985-1987												
SX	50	2004-2014												
SX JUNIOR	50	2006-2007												
SX SENIOR Adventure (Rear Drum Model)	50	2002-2007												
SX	60	1999-2000												
SX	65	1998-2001						KT06FID			KT06RID			
SX	65	2002-2003						KT06FID			KT06RID			
SX	65	2004-2008						KT06FID			KT06RID			
SX	65	2009-2014						KT06FID			KT06RID			
XC	65	2008						KT06FID			KT06RID			
CHOPPER	80	1980-1984												
MX	80	2000-2002						KT06FID			KT06RID			
PL WATER COOLED	80	1987-1990												
SX	85	2003-2010						KT07FID			KT07RID			
SX	85	2011						KT07FID			WF4509			
SX	85	2012-2014						KT07FID			WF4509			
SX 19/16	85	2013-2014						WF4102			WF4509			
XC	85	2007-2009						KT07FID			KT07RID			
SX	105	2004-2008						KT07FID			KT07RID			
XC	105	2008						KT07FID			KT07RID			
EXC	125	1998-1999	BY4124	S34006	WL4007	S34005		KT02FID		BY4505	KT11RID / WF4505	KT11RI		
EXC	125	2000-2003	BY4124	S34006	WL4007	S34005		KT02FID		BY4505	KT11RID / WF4505	KT11RI		POW68
EXC	125	2004-2008	BY4124	S34006	WL4007	S34005		KT02FID		BY4505	KT11RID / WF4505	KT11RI		POW68
EXC	125	2009	BY4124	S34006	WL4007	S34005		KT02FID		BY4505	KT11RID / WF4505	KT11RI		POW68
EXC	125	2010-2014	BY4124	S34006	WL4007	S34005		KT02FID		BY4505	KT11RID / WF4505	KT11RI		PW4008
EXC	125	2015	BY4124	S34006	WL4007	S34005		KT02FID		BY4505	KT11RID / WF4505	KT11RI		PW4008
EXC SIX DAYS	125	2009-2012	BY4124	S34006	WL4007	S34005		KT02FID		BY4505	KT11RID / WF4505	KT11RI		PW4008
EXC SIX DAYS	125	2013-2015	BY4124	S34006	WL4007	S34005		KT02FID		BY4505	KT11RID / WF4505	KT11RI		PW4008
GS	125	1987												
GS	125	1988-1992								BY4505	KT11RID / WF4505	KT11RI		
GS	125	1993	BY4124	S34006	WL4007	S34005		KT02FID		BY4505	KT11RID / WF4505	KT11RI		POW68
GS	125	1994-1997	BY4124	S34006	WL4007	S34005		KT02FID		BY4505	KT11RID / WF4505	KT11RI		POW68
LC	125	1985												
LC	125	1986												
MX	125	1985												
MX	125	1986												
MX	125	1987												
MX	125	1988								BY4505	KT11RID / WF4505	KT11RI		
MX	125	1989-1991								BY4505	KT11RID / WF4505	KT11RI		
MX	125	1992	BY4124	S34006	WL4007	S34005		KT02FID		BY4505	KT11RID / WF4505	KT11RI		POW68
SX	125	1993	BY4124	S34006	WL4007	S34005		KT02FID		BY4505	KT11RID / WF4505	KT11RI		POW68
SX	125	1994-1997	BY4124	S34006	WL4007	S34005		KT02FID		BY4505	KT11RID / WF4505	KT11RI		POW68
SX	125	1998-1999	BY4124	S34006	WL4007	S34005		KT02FID		BY4505	KT11RID / WF4505	KT11RI		POW68
SX	125	2000-2003	BY4124	S34006	WL4007	S34005		KT02FID		BY4505	KT11RID / WF4505	KT11RI		POW68
SX	125	2004-2008	BY4124	S34006	WL4007	S34005		KT02FID		BY4505	KT11RID / WF4505	KT11RI		POW68
SX	125	2009-2012	BY4124	S34006	WL4007	S34005		KT02FID		BY4505	KT11RID / WF4505	KT11RI		PW4008
SX	125	2013-2014	BY4124	S34006	WL4007	S34005		KT02FID		BY4505	KT11RID / WF4505	KT11RI		PW4008
SX	125	2015	BY4124	S34006	WL4007	S34005		KT02FID		BY4505	KT11RID / WF4505	KT11RI		PW4008
SXS	125	2000-2003	BY4124	S34006	WL4007	S34005		KT02FID		BY4505	KT11RID / WF4505	KT11RI		POW68
SXS	125	2004-2008	BY4124	S34006	WL4007	S34005		KT02FID		BY4505	KT11RID / WF4505	KT11RI		POW68
SXS	125	2009-2010	BY4124	S34006	WL4007	S34005		KT02FID		BY4505	KT11RID / WF4505	KT11RI		PW4008
XC	125	1985												
XC	125	1986												
SX	144	2007-2008	BY4124	S34006	WL4007	S34005		KT02FID		BY4505	KT11RID / WF4505	KT11RI		POW68
SX	144	2009-2010	BY4124	S34006	WL4007	S34005		KT02FID		BY4505	KT11RID / WF4505	KT11RI		PW4008
SX	150	2008-2010	BY4124	S34006	WL4007	S34005		KT02FID		BY4505	KT11RID / WF4505	KT11RI		PW4008

PASTIGLIE / PADS			PASTIGLIE / PADS			KIT MAGGIORAZIONE OVERSIZE KIT		TRASFORMAZIONE MOTARD MOTARD TRASFORMATION					OFFROAD / FUORISTRADA		
ANTERIORE / FRONT			POSTERIORE / REAR			ANTERIORE FRONT	POSTERIORE REAR	DISCO DISK ANTERIORE FRONT	PASTIGLIE PADS ANTERIORE FRONT		PASTIGLIE PADS POSTERIORE REAR	SUPPORTO PINZA BRACKET CALIPER DISK Ø320			
CM46	CM44	SM1	CM46	CM44	SM1	OKI	OKI	SK2	CM66	CM55	SM1	Per pinza originale For oem caliper	MODELLO MODEL	CC	ANNO YEAR
													KRAMIT		
				669CM44	669SM1						669SM1		ER- MC	125	1989-1993
				669CM44	669SM1						669SM1		ER- MC	250	1990-1992
746CM46	746CM44	746SM1	773CM46	773CM44	773SM1					746CM55	773SM1		GS- MX	250	1997
746CM46	746CM44	746SM1	773CM46	773CM44	773SM1					746CM55	773SM1		SM	250	1997
													KTM		
		612SM1											COMET	50	1982-1985
		694SM1											EXC	50	1995-1998
		741SM1			621SM1						621SM1		EXC	50	1999
	897CM44												LC	50	2002-2005
		612SM1											MX	50	1985-1987
	897CM44			897CM44									SX	50	2004-2014
	897CM44												SX JUNIOR	50	2006-2007
	897CM44												SX SENIOR Adventure (Rear Drum Model)	50	2002-2007
		621SM1											SX	60	1999-2000
		621SM1			648SM1						648SM1		SX	65	1998-2001
	873CM44				648SM1						648SM1		SX	65	2002-2003
	873CM44			897CM44									SX	65	2004-2008
	873CM44			873CM44									SX	65	2009-2014
	873CM44												XC	65	2008
		612SM1											CHOPPER	80	1980-1984
					648SM1						648SM1		MX	80	2000-2002
		612SM1			612SM1						612SM1		PL WATER COOLED	80	1987-1990
	873CM44			873CM44									SX	85	2003-2010
	873CM44			949CM44									SX	85	2011
	955CM44			949CM44									SX	85	2012-2014
	955CM44			949CM44									SX 19/16	85	2013-2014
	873CM44			873CM44									XC	85	2007-2009
	873CM44			873CM44									SX	105	2004-2008
	873CM44			873CM44									XC	105	2008
746CM46	746CM44	746SM1	773CM46	773CM44	773SM1			WK115L		746CM55	773SM1		EXC	125	1998-1999
746CM46	746CM44	746SM1	773CM46	773CM44	773SM1	OKBY19 / OKS303 / OKWL03		WK115L		746CM55	773SM1	POW81	EXC	125	2000-2003
746CM46	746CM44	746SM1	891CM46	891CM44	891SM1	OKBY19 / OKS303 / OKWL03	OKI80	WK115L		746CM55	891SM1	POW81	EXC	125	2004-2008
746CM46	746CM44	746SM1	891CM46	891CM44	891SM1	OKBY19 / OKS303 / OKWL03	OKI80	WK115L		746CM55	891SM1		EXC	125	2009
746CM46	746CM44	746SM1	891CM46	891CM44	891SM1	OKBY25 / OKS309 / OKWL14	OKI80	WK115L		746CM55	891SM1		EXC	125	2010-2014
746CM46	746CM44	746SM1		891CM44		OKBY25 / OKS309 / OKWL14	OKI80	WK115L		746CM55			EXC	125	2015
746CM46	746CM44	746SM1	891CM46	891CM44	891SM1	OKBY25 / OKS309 / OKWL14	OKI80	WK115L			891SM1		EXC SIX DAYS	125	2009-2012
746CM46	746CM44	746SM1	891CM46	891CM44	891SM1	OKBY25 / OKS309 / OKWL14	OKI80	WK115L		746CM55	891SM1		EXC SIX DAYS	125	2013-2015
		726SM1			726SM1						726SM1		GS	125	1987
													GS	125	1988-1992
746CM46	746CM44	746SM1		669CM44	669SM1	OKBY19 / OKS303 / OKWL03		WK115L		746CM55	669SM1	POW81	GS	125	1993
746CM46	746CM44	746SM1	773CM46	773CM44	773SM1	OKBY19 / OKS303 / OKWL03		WK115L		746CM55	773SM1	POW81	GS	125	1994-1997
		612SM1											LC	125	1985
		612SM1			612SM1						612SM1		LC	125	1986
		612SM1											MX	125	1985
		612SM1			612SM1						612SM1		MX	125	1986
		726SM1			726SM1						726SM1		MX	125	1987
													MX	125	1988
	669CM44	669SM1		669CM44	669SM1						669SM1		MX	125	1989-1991
746CM46	746CM44	746SM1		669CM44	669SM1	OKBY19 / OKS303 / OKWL03		WK115L		746CM55	669SM1	POW81	MX	125	1992
746CM46	746CM44	746SM1		669CM44	669SM1	OKBY19 / OKS303 / OKWL03		WK115L		746CM55	669SM1	POW81	SX	125	1993
746CM46	746CM44	746SM1	773CM46	773CM44	773SM1	OKBY19 / OKS303 / OKWL03		WK115L		746CM55	773SM1	POW81	SX	125	1994-1997
746CM46	746CM44	746SM1	773CM46	773CM44	773SM1			WK115L		746CM55	773SM1	POW81	SX	125	1998-1999
746CM46	746CM44	746SM1	773CM46	773CM44	773SM1	OKBY19 / OKS303 / OKWL03		WK115L		746CM55	773SM1	POW81	SX	125	2000-2003
746CM46	746CM44	746SM1	891CM46	891CM44	891SM1	OKBY19 / OKS303 / OKWL03	OKI80	WK115L		746CM55	891SM1	POW81	SX	125	2004-2008
746CM46	746CM44	746SM1	891CM46	891CM44	891SM1	OKBY25 / OKS309 / OKWL14	OKI80	WK115L		746CM55	891SM1		SX	125	2009-2012
746CM46	746CM44	746SM1	891CM46	891CM44	891SM1	OKBY25 / OKS309 / OKWL14	OKI89	WK115L		746CM55	891SM1		SX	125	2013-2014
746CM46	746CM44	746SM1	891CM46	891CM44	891SM1	OKBY25 / OKI89 / OKS309 / OKWL14		WK115L		746CM55	891SM1		SX	125	2015
746CM46	746CM44	746SM1	773CM46	773CM44	773SM1	OKBY19 / OKS303 / OKWL03		WK115L		746CM55	773SM1	POW81	SXS	125	2000-2003
746CM46	746CM44	746SM1	891CM46	891CM44	891SM1	OKBY19 / OKS303 / OKWL03	OKI80	WK115L		746CM55	891SM1	POW81	SXS	125	2004-2008
746CM46	746CM44	746SM1	891CM46	891CM44	891SM1	OKBY25 / OKS309 / OKWL14	OKI80	WK115L		746CM55	891SM1		SXS	125	2009-2010
		612SM1											XC	125	1985
		612SM1			612SM1						612SM1		XC	125	1986
746CM46	746CM44	746SM1	891CM46	891CM44	891SM1	OKBY19 / OKS303 / OKWL03	OKI80	WK115L		746CM55	891SM1	POW81	SX	144	2007-2008
746CM46	746CM44	746SM1	891CM46	891CM44	891SM1	OKBY25 / OKS309 / OKWL14	OKI80	WK115L		746CM55	891SM1		SX	144	2009-2010
746CM46	746CM44	746SM1	891CM46	891CM44	891SM1	OKBY25 / OKS309 / OKWL14				746CM55	891SM1		SX	150	2008-2010

OFFROAD / FUORISTRADA

			DISCHI / DISKS										SUPPORTI PINZA BRACKETS CALIPER	
			ANTERIORE / FRONT							POSTERIORE / REAR			DISK Ø260	DISK Ø270
MODELLO MODEL	CC	ANNO YEAR	BATFLY ALUMINIUM Ø270	S3 BATFLY CROSS Ø270	W-FLO Ø270	S3 BATFLY CROSS Ø260	W-FLO Ø260	W-FIX ØOEM	R-FIX ØOEM	BATFLY	W-FIX / W-FULL	R-FIX	Per pinza originale / For oem caliper	Per pinza originale / For oem caliper
SX	150	2011-2012	BY4124	S34006	WL4007	S34005		KT02FID		BY4505	KT11RID / WF4505	KT11RI		PW4008
SX	150	2013-2014	BY4124	S34006	WL4007	S34005		KT02FID		BY4505	KT11RID / WF4505	KT11RI		PW4008
SX	150	2015	BY4124	S34006	WL4007	S34005		KT02FID		BY4505	KT11RID / WF4505	KT11RI		PW4008
EXC	200	1998-1999	BY4124	S34006	WL4007	S34005		KT02FID		BY4505	KT11RID / WF4505	KT11RI		
EXC	200	2000-2002	BY4124	S34006	WL4007	S34005		KT02FID		BY4505	KT11RID / WF4505	KT11RI		POW68
EXC	200	2003-2009	BY4124	S34006	WL4007	S34005		KT02FID		BY4505	KT11RID / WF4505	KT11RI		POW68
EXC	200	2010-2014	BY4124	S34006	WL4007	S34005		KT02FID		BY4505	KT11RID / WF4505	KT11RI		PW4008
EXC	200	2015	BY4124	S34006	WL4007	S34005		KT02FID		BY4505	KT11RID / WF4505	KT11RI		PW4008
MXC	200	1998-2003	BY4124	S34006	WL4007	S34005		KT02FID		BY4505	KT11RID / WF4505	KT11RI		POW68
SX	200	2003-2008	BY4124	S34006	WL4007	S34005		KT02FID		BY4505	KT11RID / WF4505	KT11RI		POW68
SX	200	2009	BY4124	S34006	WL4007	S34005		KT02FID		BY4505	KT11RID / WF4505	KT11RI		PW4008
XC W	200	2006-2008	BY4124	S34006	WL4007	S34005		KT02FID		BY4505	KT11RID / WF4505	KT11RI		POW68
XC W	200	2009	BY4124	S34006	WL4007	S34005		KT02FID		BY4505	KT11RID / WF4505	KT11RI		POW68
EXC	250	1998-1999	BY4124	S34006	WL4007	S34005		KT02FID		BY4505	KT11RID / WF4505	KT11RI		
EXC	250	2000-2003	BY4124	S34006	WL4007	S34005		KT02FID		BY4505	KT11RID / WF4505	KT11RI		POW68
EXC	250	2004-2009	BY4124	S34006	WL4007	S34005		KT02FID		BY4505	KT11RID / WF4505	KT11RI		POW68
EXC	250	2010-2014	BY4124	S34006	WL4007	S34005		KT02FID		BY4505	KT11RID / WF4505	KT11RI		PW4008
EXC E	250	2015	BY4124	S34006	WL4007	S34005		KT02FID		BY4505	KT11RID / WF4505	KT11RI		PW4008
EXC F	250	2003	BY4124	S34006	WL4007	S34005		KT02FID		BY4505	KT11RID / WF4505	KT11RI		POW68
EXC F	250	2004-2009	BY4124	S34006	WL4007	S34005		KT02FID		BY4505	KT11RID / WF4505	KT11RI		POW68
EXC F	250	2010-2014	BY4124	S34006	WL4007	S34005		KT02FID		BY4505	KT11RID / WF4505	KT11RI		PW4008
EXC F	250	2015	BY4124	S34006	WL4007	S34005		KT02FID		BY4505	KT11RID / WF4505	KT11RI		PW4008
EXC F SIX DAYS	250	2009-2015	BY4124	S34006	WL4007	S34005		KT02FID		BY4505	KT11RID / WF4505	KT11RI		PW4008
EXC G	250	2004-2009	BY4124	S34006	WL4007	S34005		KT02FID		BY4505	KT11RID / WF4505	KT11RI		POW68
EXC SIX DAYS	250	2009-2015	BY4124	S34006	WL4007	S34005		KT02FID		BY4505	KT11RID / WF4505	KT11RI		PW4008
FREERIDE R	250	2012-2015				S34013					WF4509			
GS	250	1987												
GS	250	1988-1989								BY4505	KT11RID / WF4505	KT11RI		
GS	250	1990-1992								BY4505	KT11RID / WF4505	KT11RI		
GS	250	1993	BY4124	S34006	WL4007	S34005		KT02FID		BY4505	KT11RID / WF4505	KT11RI		POW68
GS	250	1994-1997	BY4124	S34006	WL4007	S34005		KT02FID		BY4505	KT11RID / WF4505	KT11RI		POW68
MX	250	1987												
MX	250	1988								BY4505	KT11RID / WF4505	KT11RI		
MX	250	1989-1991								BY4505	KT11RID / WF4505	KT11RI		
MX	250	1992	BY4124	S34006	WL4007	S34005		KT02FID		BY4505	KT11RID / WF4505	KT11RI		POW68
MXC	250	1998-2003	BY4124	S34006	WL4007	S34005		KT02FID		BY4505	KT11RID / WF4505	KT11RI		POW68
SX	250	1993	BY4124	S34006	WL4007	S34005		KT02FID		BY4505	KT11RID / WF4505	KT11RI		POW68
SX	250	1994-1997				S34005		KT02FID		BY4505	KT11RID / WF4505	KT11RI		
SX	250	1998-1999	BY4124	S34006	WL4007	S34005		KT02FID		BY4505	KT11RID / WF4505	KT11RI		
SX	250	2000-2002	BY4124	S34006	WL4007	S34005		KT02FID		BY4505	KT11RID / WF4505	KT11RI		POW68
SX	250	2003-2008	BY4124	S34006	WL4007	S34005		KT02FID		BY4505	KT11RID / WF4505	KT11RI		POW68
SX	250	2009-2012	BY4124	S34006	WL4007	S34005		KT02FID		BY4505	KT11RID / WF4505	KT11RI		PW4008
SX	250	2013-2014	BY4124	S34006	WL4007	S34005		KT02FID		BY4505	KT11RID / WF4505	KT11RI		PW4008
SX	250	2015	BY4124	S34006	WL4007	S34005		KT02FID		BY4505	KT11RID / WF4505	KT11RI		PW4008
SX F	250	2003-2008	BY4124	S34006	WL4007	S34005		KT02FID		BY4505	KT11RID / WF4505	KT11RI		POW68
SX F	250	2009-2012	BY4124	S34006	WL4007	S34005		KT02FID		BY4505	KT11RID / WF4505	KT11RI		PW4008
SX F	250	2013-2014	BY4124	S34006	WL4007	S34005		KT02FID		BY4505	KT11RID / WF4505	KT11RI		PW4008
SX F	250	2015	BY4124	S34006	WL4007	S34005		KT02FID		BY4505	KT11RID / WF4505	KT11RI		PW4008
SXS	250	2003-2008	BY4124	S34006	WL4007	S34005		KT02FID		BY4505	KT11RID / WF4505	KT11RI		POW68
SXS	250	2009-2010	BY4124	S34006	WL4007	S34005		KT02FID		BY4505	KT11RID / WF4505	KT11RI		PW4008
SXS F	250	2006-2008	BY4124	S34006	WL4007	S34005		KT02FID		BY4505	KT11RID / WF4505	KT11RI		POW68
SXS F	250	2009	BY4124	S34006	WL4007	S34005		KT02FID		BY4505	KT11RID / WF4505	KT11RI		PW4008
XC F	250	2007-2009	BY4124	S34006	WL4007	S34005		KT02FID		BY4505	KT11RID / WF4505	KT11RI		POW68
XC F	250	2010-2011	BY4124	S34006	WL4007	S34005		KT02FID		BY4505	KT11RID / WF4505	KT11RI		PW4008
XC F	250	2012	BY4124	S34006	WL4007	S34005		KT02FID		BY4505	KT11RID / WF4505	KT11RI		PW4008
XC W	250	2006-2008	BY4124	S34006	WL4007	S34005		KT02FID		BY4505	KT11RID / WF4505	KT11RI		POW68
XC W	250	2009	BY4124	S34006	WL4007	S34005		KT02FID		BY4505	KT11RID / WF4505	KT11RI		POW68
XC W	250	2010-2012	BY4124	S34006	WL4007	S34005		KT02FID		BY4505	KT11RID / WF4505	KT11RI		PW4008
EXC	300	1997-1999	BY4124	S34006	WL4007	S34005		KT02FID		BY4505	KT11RID / WF4505	KT11RI		POW68
EXC	300	2000-2003	BY4124	S34006	WL4007	S34005		KT02FID		BY4505	KT11RID / WF4505	KT11RI		POW68
EXC	300	2004-2009	BY4124	S34006	WL4007	S34005		KT02FID		BY4505	KT11RID / WF4505	KT11RI		POW68
EXC	300	2010-2014	BY4124	S34006	WL4007	S34005		KT02FID		BY4505	KT11RID / WF4505	KT11RI		PW4008
EXC E	300	2015	BY4124	S34006	WL4007	S34005		KT02FID		BY4505	KT11RID / WF4505	KT11RI		PW4008
EXC SIX DAYS	300	2009-2012	BY4124	S34006	WL4007	S34005		KT02FID		BY4505	KT11RID / WF4505	KT11RI		PW4008
EXC SIX DAYS	300	2013-2015	BY4124	S34006	WL4007	S34005		KT02FID		BY4505	KT11RID / WF4505	KT11RI		PW4008
GS	300	1991-1992	BY4124	S34006	WL4007	S34005		KT02FID		BY4505	KT11RID / WF4505	KT11RI		

PASTIGLIE / PADS			PASTIGLIE / PADS			KIT MAGGIORAZIONE OVERSIZE KIT		TRASFORMAZIONE MOTARD MOTARD TRASFORMATION					OFFROAD / FUORISTRADA		
								DISCO DISK	PASTIGLIE PADS			SUPPORTO PINZA BRACKET CALIPER			
ANTERIORE / FRONT			POSTERIORE / REAR			ANTERIORE FRONT	POSTERIORE REAR	ANTERIORE FRONT	ANTERIORE FRONT		POSTERIORE REAR	DISK Ø320			
CM46	CM44	SM1	CM46	CM44	SM1	OKI	OKI	SK2	CM66	CM55	SM1	Per pinza originale For oem caliper	MODELLO MODEL	CC	ANNO YEAR
746CM46	746CM44	746SM1	891CM46	891CM44	891SM1	OKBY25 / OKS309 / OKWL14	OKI80	WK115L		746CM55	891SM1		SX	150	2011-2012
746CM46	746CM44	746SM1	891CM46	891CM44	891SM1	OKBY25 / OKS309 / OKWL14	OKI89	WK115L		746CM55	891SM1		SX	150	2013-2014
746CM46	746CM44	746SM1	891CM46	891CM44	891SM1	OKBY25 / OKI89 / OKS309 / OKWL14		WK115L		746CM55	891SM1		SX	150	2015
								WK054L					EXC	200	1998-1999
746CM46	746CM44	746SM1	773CM46	773CM44	773SM1	OKBY19 / OKS303 / OKWL03		WK115L		746CM55	773SM1	POW81	EXC	200	2000-2002
746CM46	746CM44	746SM1	891CM46	891CM44	891SM1	OKBY19 / OKS303 / OKWL03	OKI80	WK115L		746CM55	891SM1	POW81	EXC	200	2003-2009
746CM46	746CM44	746SM1	891CM46	891CM44	891SM1	OKBY25 / OKS309 / OKWL14	OKI80	WK115L		746CM55	891SM1		EXC	200	2010-2014
746CM46	746CM44	746SM1		891CM44		OKBY25 / OKS309 / OKWL14	OKI80	WK115L		746CM55			EXC	200	2015
746CM46	746CM44	746SM1	773CM46	773CM44	773SM1	OKBY19 / OKS303 / OKWL03		WK115L		746CM55	773SM1	POW81	MXC	200	1998-2003
746CM46	746CM44	746SM1	891CM46	891CM44	891SM1	OKBY19 / OKS303 / OKWL03	OKI80	WK115L		746CM55	891SM1	POW81	SX	200	2003-2008
746CM46	746CM44	746SM1	891CM46	891CM44	891SM1	OKBY25 / OKS309 / OKWL14	OKI80	WK115L		746CM55	891SM1	POW81	SX	200	2009
746CM46	746CM44	746SM1	891CM46	891CM44	891SM1	OKBY19 / OKS303 / OKWL03	OKI80	WK115L			891SM1	POW81	XC W	200	2006-2008
746CM46	746CM44	746SM1	891CM46	891CM44	891SM1	OKBY19 / OKS303 / OKWL03	OKI80	WK115L			891SM1		XC W	200	2009
746CM46	746CM44	746SM1	773CM46	773CM44	773SM1			WK115L		746CM55	773SM1		EXC	250	1998-1999
746CM46	746CM44	746SM1	773CM46	773CM44	773SM1	OKBY19 / OKS303 / OKWL03		WK115L		746CM55	773SM1	POW81	EXC	250	2000-2003
746CM46	746CM44	746SM1	891CM46	891CM44	891SM1	OKBY19 / OKS303 / OKWL03	OKI80	WK115L		746CM55	891SM1	POW81	EXC	250	2004-2009
746CM46	746CM44	746SM1	891CM46	891CM44	891SM1	OKBY25 / OKS309 / OKWL14	OKI80	WK115L		746CM55	891SM1		EXC	250	2010-2014
746CM46	746CM44	746SM1		891CM44		OKBY25 / OKS309 / OKWL14	OKI80	WK115L		746CM55			EXC E	250	2015
746CM46	746CM44	746SM1	773CM46	773CM44	773SM1	OKBY19 / OKS303 / OKWL03		WK115L		746CM55	773SM1	POW81	EXC F	250	2003
746CM46	746CM44	746SM1	891CM46	891CM44	891SM1	OKBY19 / OKS303 / OKWL03	OKI80	WK115L		746CM55	891SM1	POW81	EXC F	250	2004-2009
746CM46	746CM44	746SM1	891CM46	891CM44	891SM1	OKBY25 / OKS309 / OKWL14	OKI80	WK115L		746CM55	891SM1		EXC F	250	2010-2014
746CM46	746CM44	746SM1	891CM46	891CM44	891SM1	OKBY25 / OKS309 / OKWL14	OKI80			746CM55	891SM1		EXC F	250	2015
746CM46	746CM44	746SM1	891CM46	891CM44	891SM1	OKBY25 / OKS309 / OKWL14	OKI80	WK115L		746CM55	891SM1		EXC F SIX DAYS	250	2009-2015
746CM46	746CM44	746SM1	891CM46	891CM44	891SM1	OKBY19 / OKS303 / OKWL03	OKI80	WK115L		746CM55	891SM1	POW81	EXC G	250	2004-2009
746CM46	746CM44	746SM1	891CM46	891CM44	891SM1	OKBY25 / OKS309 / OKWL14	OKI80	WK115L		746CM55	891SM1		EXC SIX DAYS	250	2009-2015
	955CM44			949CM44									FREERIDE R	250	2012-2015
		726SM1			726SM1						726SM1		GS	250	1987
				669CM44	669SM1						669SM1		GS	250	1988-1989
746CM46	746CM44	746SM1		669CM44	669SM1	OKWL03		WK115L		746CM55	669SM1	POW81	GS	250	1993
746CM46	746CM44	746SM1	773CM46	773CM44	773SM1	OKBY19 / OKS303 / OKWL03		WK115L		746CM55	773SM1	POW81	GS	250	1994-1997
		726SM1			726SM1						726SM1		MX	250	1987
													MX	250	1988
	669CM44	669SM1		669CM44	669SM1						669SM1		MX	250	1989-1991
746CM46	746CM44	746SM1		669CM44	669SM1	OKBY19 / OKS303 / OKWL03		WK115L		746CM55	669SM1	POW81	MX	250	1992
746CM46	746CM44	746SM1	773CM46	773CM44	773SM1	OKBY19 / OKS303 / OKWL03		WK115L		746CM55	773SM1	POW81	MXC	250	1998-2003
746CM46	746CM44	746SM1		669CM44	669SM1	OKBY19 / OKS303 / OKWL03		WK115L		746CM55	669SM1	POW81	SX	250	1993
746CM46	746CM44	746SM1	773CM46	773CM44	773SM1			WK115L		746CM55	773SM1		SX	250	1994-1997
746CM46	746CM44	746SM1	773CM46	773CM44	773SM1			WK115L		746CM55	773SM1		SX	250	1998-1999
746CM46	746CM44	746SM1	773CM46	773CM44	773SM1	OKBY19 / OKS303 / OKWL03		WK115L		746CM55	773SM1	POW81	SX	250	2000-2002
746CM46	746CM44	746SM1	891CM46	891CM44	891SM1	OKBY19 / OKS303 / OKWL03	OKI80	WK115L		746CM55	891SM1	POW81	SX	250	2003-2008
746CM46	746CM44	746SM1	891CM46	891CM44	891SM1	OKBY25 / OKS309 / OKWL14	OKI80	WK115L		746CM55	891SM1		SX	250	2009-2012
746CM46	746CM44	746SM1	891CM46	891CM44	891SM1	OKBY25 / OKS309 / OKWL14	OKI89	WK115L		746CM55	891SM1		SX	250	2013-2014
746CM46	746CM44	746SM1	891CM46	891CM44	891SM1	OKBY25 / OKI89 / OKS309 / OKWL14		WK115L		746CM55	891SM1		SX	250	2015
746CM46	746CM44	746SM1	891CM46	891CM44	891SM1	OKBY19 / OKS303 / OKWL03	OKI80	WK115L		746CM55	891SM1	POW81	SX F	250	2003-2008
746CM46	746CM44	746SM1	891CM46	891CM44	891SM1	OKBY25 / OKS309 / OKWL14	OKI80	WK115L		746CM55	891SM1		SX F	250	2009-2012
746CM46	746CM44	746SM1	891CM46	891CM44	891SM1	OKBY25 / OKS309 / OKWL14	OKI89	WK115L		746CM55	891SM1		SX F	250	2013-2014
746CM46	746CM44	746SM1	891CM46	891CM44	891SM1	OKBY25 / OKI89 / OKS309 / OKWL14		WK115L		746CM55	891SM1		SX F	250	2015
746CM46	746CM44	746SM1	891CM46	891CM44	891SM1	OKBY19 / OKS303 / OKWL03	OKI80	WK115L		746CM55	891SM1	POW81	SXS	250	2003-2008
746CM46	746CM44	746SM1	891CM46	891CM44	891SM1	OKBY25 / OKS309 / OKWL14	OKI80	WK115L		746CM55	891SM1		SXS	250	2009-2010
746CM46	746CM44	746SM1	891CM46	891CM44	891SM1	OKBY19 / OKS303 / OKWL03	OKI80	WK115L		746CM55	891SM1	POW81	SXS F	250	2006-2008
746CM46	746CM44	746SM1	891CM46	891CM44	891SM1	OKBY25 / OKS309 / OKWL14	OKI80	WK115L		746CM55	891SM1		SXS F	250	2009
746CM46	746CM44	746SM1	891CM46	891CM44	891SM1	OKBY19 / OKS303 / OKWL03	OKI80	WK115L			891SM1	POW81	XC F	250	2007-2009
746CM46	746CM44	746SM1	891CM46	891CM44	891SM1			WK115L			891SM1	POW81	XC F	250	2010-2011
746CM46	746CM44	746SM1	891CM46	891CM44	891SM1						891SM1	POW81	XC F	250	2012
746CM46	746CM44	746SM1	891CM46	891CM44	891SM1	OKBY19 / OKS303 / OKWL03	OKI80	WK115L		746CM55	891SM1	POW81	XC W	250	2006-2008
746CM46	746CM44	746SM1	891CM46	891CM44	891SM1	OKBY19 / OKS303 / OKWL03	OKI80	WK115L		746CM55	891SM1		XC W	250	2009
746CM46	746CM44	746SM1	891CM46	891CM44	891SM1	OKBY25 / OKS309 / OKWL14	OKI80				891SM1		XC W	250	2010-2012
746CM46	746CM44	746SM1	773CM46	773CM44	773SM1			WK115L		746CM55	773SM1		EXC	300	1997-1999
746CM46	746CM44	746SM1	773CM46	773CM44	773SM1	OKBY19 / OKS303 / OKWL03		WK115L		746CM55	773SM1	POW81	EXC	300	2000-2003
746CM46	746CM44	746SM1	891CM46	891CM44	891SM1	OKBY19 / OKS303 / OKWL03	OKI80	WK115L		746CM55	891SM1	POW81	EXC	300	2004-2009
746CM46	746CM44	746SM1	891CM46	891CM44	891SM1	OKBY25 / OKS309 / OKWL14	OKI80	WK115L		746CM55	891SM1		EXC	300	2010-2014
746CM46	746CM44	746SM1		891CM44		OKBY25 / OKS309 / OKWL14	OKI80	WK115L		746CM55			EXC E	300	2015
746CM46	746CM44	746SM1	891CM46	891CM44	891SM1	OKBY25 / OKS309 / OKWL14	OKI80	WK115L			891SM1		EXC SIX DAYS	300	2009-2012
746CM46	746CM44	746SM1	891CM46	891CM44	891SM1	OKBY25 / OKS309 / OKWL14	OKI80	WK115L		746CM55	891SM1		EXC SIX DAYS	300	2013-2015
				669CM44	669SM1			WK054L			669SM1	POW81	GS	300	1991-1992

OFFROAD / FUORISTRADA

			DISCHI / DISKS										SUPPORTI PINZA BRACKETS CALIPER	
			ANTERIORE / FRONT							POSTERIORE / REAR			DISK Ø260	DISK Ø270
MODELLO MODEL	CC	ANNO YEAR	BATFLY ALUMINIUM Ø270	S3 BATFLY CROSS Ø270	W-FLO Ø270	S3 BATFLY CROSS Ø260	W-FLO Ø260	W-FIX ØOEM	R-FIX ØOEM	BATFLY	W-FIX / W-FULL	R-FIX	Per pinza originale / For oem caliper	Per pinza originale / For oem caliper
GS	300	1993-1994	BY4124	S34006	WL4007	S34005		KT02FID		BY4505	KT11RID / WF4505	KT11RI		POW68
GS	300	1995-1996	BY4124	S34006	WL4007	S34005		KT02FID		BY4505	KT11RID / WF4505	KT11RI		POW68
MX	300	1991	BY4124	S34006	WL4007	S34005		KT02FID		BY4505	KT11RID / WF4505	KT11RI		
MX	300	1992	BY4124	S34006	WL4007	S34005		KT02FID		BY4505	KT11RID / WF4505	KT11RI		POW68
MXC	300	1998-2003	BY4124	S34006	WL4007	S34005		KT02FID		BY4505	KT11RID / WF4505	KT11RI		POW68
MXC	300	2004-2005	BY4124	S34006	WL4007	S34005		KT02FID		BY4505	KT11RID / WF4505	KT11RI		POW68
SX	300	1993	BY4124	S34006	WL4007	S34005		KT02FID		BY4505	KT11RID / WF4505	KT11RI		POW68
SX	300	1997-1999	BY4124	S34006	WL4007	S34005		KT02FID		BY4505	KT11RID / WF4505	KT11RI		
SX	300	2000-2003	BY4124	S34006	WL4007	S34005		KT02FID		BY4505	KT11RID / WF4505	KT11RI		POW68
XC	300	2006-2009	BY4124	S34006	WL4007	S34005		KT02FID		BY4505	KT11RID / WF4505	KT11RI		POW68
XC	300	2010-2012	BY4124	S34006	WL4007	S34005		KT02FID		BY4505	KT11RID / WF4505	KT11RI		
XC W	300	2006-2008	BY4124	S34006	WL4007	S34005		KT02FID		BY4505	KT11RID / WF4505	KT11RI		POW68
XC W	300	2009	BY4124	S34006	WL4007	S34005		KT02FID		BY4505	KT11RID / WF4505	KT11RI		POW68
XC W	300	2010-2012	BY4124	S34006	WL4007	S34005		KT02FID		BY4505	KT11RID / WF4505	KT11RI		PW4008
EXC F	350	2010-2014	BY4124	S34006	WL4007	S34005		KT02FID		BY4505	KT11RID / WF4505	KT11RI		PW4008
EXC F	350	2015	BY4124	S34006	WL4007	S34005		KT02FID		BY4505	KT11RID / WF4505	KT11RI		PW4008
EXC F SIX DAYS	350	2011-2015	BY4124	S34006	WL4007	S34005		KT02FID		BY4505	KT11RID / WF4505	KT11RI		PW4008
FREERIDE	350	2012-2015				S34013					WF4509			
FREERIDE E	350	2012-2013				S34013					WF4509			
GS	350	1993	BY4124	S34006	WL4007	S34005		KT02FID		BY4505	KT11RID / WF4505	KT11RI		POW68
SX F	350	2011-2012	BY4124	S34006	WL4007	S34005		KT02FID		BY4505	KT11RID / WF4505	KT11RI		PW4008
SX F	350	2013-2014	BY4124	S34006	WL4007	S34005		KT02FID		BY4505	KT11RID / WF4505	KT11RI		PW4008
SX F	350	2015	BY4124	S34006	WL4007	S34005		KT02FID		BY4505	KT11RID / WF4505	KT11RI		PW4008
EXC	380	1998-1999	BY4124	S34006	WL4007	S34005		KT02FID		BY4505	KT11RID / WF4505	KT11RI		POW68
EXC	380	2000-2002	BY4124	S34006	WL4007	S34005		KT02FID		BY4505	KT11RID / WF4505	KT11RI		POW68
MXC	380	1998-2001	BY4124	S34006	WL4007	S34005		KT02FID		BY4505	KT11RID / WF4505	KT11RI		POW68
SX	380	1998-2002	BY4124	S34006	WL4007	S34005		KT02FID		BY4505	KT11RID / WF4505	KT11RI		POW68
EGS	400	1996-1999	BY4124	S34006	WL4007	S34005		KT02FID		BY4505	KT11RID / WF4505	KT11RI		POW68
EXC	400	1994-1999	BY4124	S34006	WL4007	S34005		KT02FID		BY4505	KT11RID / WF4505	KT11RI		POW68
EXC	400	2000-2003	BY4124	S34006	WL4007	S34005		KT02FID		BY4505	KT11RID / WF4505	KT11RI		POW68
EXC	400	2004-2009	BY4124	S34006	WL4007	S34005		KT02FID		BY4505	KT11RID / WF4505	KT11RI		POW68
EXC	400	2010-2011	BY4124	S34006	WL4007	S34005		KT02FID		BY4505	KT11RID / WF4505	KT11RI		PW4008
EXC G	400	2004-2006	BY4124	S34006	WL4007	S34005		KT02FID		BY4505	KT11RID / WF4505	KT11RI		POW68
SX	400	2000-2002	BY4124	S34006	WL4007	S34005		KT02FID		BY4505	KT11RID / WF4505	KT11RI		POW68
XC W	400	2007-2008	BY4124	S34006	WL4007	S34005		KT02FID		BY4505	KT11RID / WF4505	KT11RI		POW68
XC W	400	2009	BY4124	S34006	WL4007	S34005		KT02FID		BY4505	KT11RID / WF4505	KT11RI		POW68
EXC	450	2003	BY4124	S34006	WL4007	S34005		KT02FID		BY4505	KT11RID / WF4505	KT11RI		POW68
EXC	450	2004-2009	BY4124	S34006	WL4007	S34005		KT02FID		BY4505	KT11RID / WF4505	KT11RI		POW68
EXC	450	2010-2014	BY4124	S34006	WL4007	S34005		KT02FID		BY4505	KT11RID / WF4505	KT11RI		PW4008
EXC	450	2015	BY4124	S34006	WL4007	S34005		KT02FID		BY4505	KT11RID / WF4505	KT11RI		PW4008
EXC R	450	2008-2009	BY4124	S34006	WL4007	S34005		KT02FID		BY4505	KT11RID / WF4505	KT11RI		POW68
EXC SIX DAYS	450	2009-2015	BY4124	S34006	WL4007	S34005		KT02FID		BY4505	KT11RID / WF4505	KT11RI		PW4008
MXC	450	2003	BY4124	S34006	WL4007	S34005		KT02FID		BY4505	KT11RID / WF4505	KT11RI		POW68
MXC	450	2004-2006	BY4124	S34006	WL4007	S34005		KT02FID		BY4505	KT11RID / WF4505	KT11RI		POW68
SX F	450	2003-2008	BY4124	S34006	WL4007	S34005		KT02FID		BY4505	KT11RID / WF4505	KT11RI		POW68
SX F	450	2009-2012	BY4124	S34006	WL4007	S34005		KT02FID		BY4505	KT11RID / WF4505	KT11RI		PW4008
SX F	450	2013-2014	BY4124	S34006	WL4007	S34005		KT02FID		BY4505	KT11RID / WF4505	KT11RI		PW4008
SX F	450	2015	BY4124	S34006	WL4007	S34005		KT02FID		BY4505	KT11RID / WF4505	KT11RI		PW4008
SXS	450	2003-2008	BY4124	S34006	WL4007	S34005		KT02FID		BY4505	KT11RID / WF4505	KT11RI		POW68
SXS	450	2009-2010	BY4124	S34006	WL4007	S34005		KT02FID		BY4505	KT11RID / WF4505	KT11RI		PW4008
SXS F	450	2003-2008	BY4124	S34006	WL4007	S34005		KT02FID		BY4505	KT11RID / WF4505	KT11RI		POW68
SXS F	450	2009-2010	BY4124	S34006	WL4007	S34005		KT02FID		BY4505	KT11RID / WF4505	KT11RI		PW4008
XC	450	2007-2008	BY4124	S34006	WL4007	S34005		KT02FID		BY4505	KT11RID / WF4505	KT11RI		POW68
XC	450	2009	BY4124	S34006	WL4007	S34005		KT02FID		BY4505	KT11RID / WF4505	KT11RI		POW68
XC F	450	2007-2008	BY4124	S34006	WL4007	S34005		KT02FID		BY4505	KT11RID / WF4505	KT11RI		POW68
XC F	450	2009	BY4124	S34006	WL4007	S34005		KT02FID		BY4505	KT11RID / WF4505	KT11RI		POW68
XC G	450	2006	BY4124	S34006	WL4007	S34005		KT02FID		BY4505	KT11RID / WF4505	KT11RI		POW68
XC W	450	2007-2008	BY4124	S34006	WL4007	S34005		KT02FID		BY4505	KT11RID / WF4505	KT11RI		POW68
XC W	450	2009	BY4124	S34006	WL4007	S34005		KT02FID		BY4505	KT11RID / WF4505	KT11RI		POW68
EXC	500	2011-2014	BY4124	S34006	WL4007	S34005		KT02FID		BY4505	KT11RID / WF4505	KT11RI		PW4008
EXC	500	2015	BY4124	S34006	WL4007	S34005		KT02FID		BY4505	KT11RID / WF4505	KT11RI		PW4008
EXC SIX DAYS	500	2011-2015	BY4124	S34006	WL4007	S34005		KT02FID		BY4505	KT11RID / WF4505	KT11RI		PW4008
LC	500	1983-1985												
LC	500	1986												
MX	500	1983-1985												
MX	500	1986												

PASTIGLIE / PADS			PASTIGLIE / PADS			KIT MAGGIORAZIONE OVERSIZE KIT		TRASFORMAZIONE MOTARD MOTARD TRASFORMATION					OFFROAD / FUORISTRADA		
								DISCO DISK	PASTIGLIE PADS			SUPPORTO PINZA BRACKET CALIPER			
ANTERIORE / FRONT			POSTERIORE / REAR			ANTERIORE FRONT	POSTERIORE REAR	ANTERIORE FRONT	ANTERIORE FRONT		POSTERIORE REAR	DISK Ø320			
CM46	CM44	SM1	CM46	CM44	SM1	OKI	OKI	SK2	CM66	CM55	SM1	Per pinza originale For oem caliper	MODELLO MODEL	CC	ANNO YEAR
746CM46	746CM44	746SM1		669CM44	669SM1	OKBY19 / OKS303 / OKWL03		WK115L		746CM55	669SM1	POW81	GS	300	1993-1994
746CM46	746CM44	746SM1	773CM46	773CM44	773SM1	OKBY19 / OKS303 / OKWL03		WK115L		746CM55	773SM1	POW81	GS	300	1995-1996
	669CM44	669SM1		669CM44	669SM1			WK054L			669SM1		MX	300	1991
746CM46	746CM44	746SM1		669CM44	669SM1	OKBY19 / OKS303 / OKWL03		WK115L		746CM55	669SM1	POW81	MX	300	1992
746CM46	746CM44	746SM1	773CM46	773CM44	773SM1	OKBY19 / OKS303 / OKWL03		WK115L		746CM55	773SM1	POW81	MXC	300	1998-2003
746CM46	746CM44	746SM1	891CM46	891CM44	891SM1	OKBY19 / OKS303 / OKWL03	OKI80	WK115L		746CM55	891SM1	POW81	MXC	300	2004-2005
746CM46	746CM44	746SM1		669CM44	669SM1	OKBY19 / OKS303 / OKWL03		WK115L		746CM55	669SM1	POW81	SX	300	1993
746CM46	746CM44	746SM1	773CM46	773CM44	773SM1			WK115L		746CM55	773SM1		SX	300	1997-1999
746CM46	746CM44	746SM1	773CM46	773CM44	773SM1	OKBY19 / OKS303 / OKWL03		WK115L		746CM55	773SM1	POW81	SX	300	2000-2003
746CM46	746CM44	746SM1	891CM46	891CM44	891SM1	OKBY19 / OKS303 / OKWL03	OKI80	WK115L			891SM1	POW81	XC	300	2006-2009
746CM46	746CM44	746SM1	891CM46	891CM44	891SM1		OKI80				891SM1		XC	300	2010-2012
746CM46	746CM44	746SM1	891CM46	891CM44	891SM1	OKBY19 / OKS303 / OKWL03	OKI80	WK115L			891SM1	POW81	XC W	300	2006-2008
746CM46	746CM44	746SM1	891CM46	891CM44	891SM1	OKBY19 / OKS303 / OKWL03	OKI80	WK115L			891SM1		XC W	300	2009
746CM46	746CM44	746SM1	891CM46	891CM44	891SM1	OKBY25 / OKS309 / OKWL14	OKI80				891SM1		XC W	300	2010-2012
746CM46	746CM44	746SM1	891CM46	891CM44	891SM1	OKBY25 / OKS309 / OKWL14	OKI80	WK115L		746CM55	891SM1		EXC F	350	2010-2014
746CM46	746CM44	746SM1	891CM46	891CM44	891SM1	OKBY25 / OKS309 / OKWL14	OKI80			746CM55	891SM1		EXC F	350	2015
746CM46	746CM44	746SM1	891CM46	891CM44	891SM1	OKBY25 / OKS309 / OKWL14	OKI80	WK115L		746CM55	891SM1		EXC F SIX DAYS	350	2011-2015
	955CM44			949CM44									FREERIDE	350	2012-2015
	955CM44			949CM44									FREERIDE E	350	2012-2013
746CM46	746CM44	746SM1		669CM44	669SM1	OKBY19 / OKS303 / OKWL03		WK115L		746CM55	669SM1	POW81	GS	350	1993
746CM46	746CM44	746SM1	891CM46	891CM44	891SM1	OKBY25 / OKS309 / OKWL14	OKI80	WK115L		746CM55	891SM1		SX F	350	2011-2012
746CM46	746CM44	746SM1	891CM46	891CM44	891SM1	OKBY25 / OKS309 / OKWL14	OKI89	WK115L		746CM55	891SM1		SX F	350	2013-2014
746CM46	746CM44	746SM1	891CM46	891CM44	891SM1	OKBY25 / OKI89 / OKS309 / OKWL14		WK115L		746CM55	891SM1		SX F	350	2015
746CM46	746CM44	746SM1	773CM46	773CM44	773SM1			WK115L		746CM55	773SM1		EXC	380	1998-1999
746CM46	746CM44	746SM1	773CM46	773CM44	773SM1	OKBY19 / OKS303 / OKWL03		WK115L		746CM55	773SM1	POW81	EXC	380	2000-2002
746CM46	746CM44	746SM1	773CM46	773CM44	773SM1			WK115L		746CM55	773SM1		MXC	380	1998-2001
746CM46	746CM44	746SM1	773CM46	773CM44	773SM1	OKBY19 / OKS303 / OKWL03		WK115L		746CM55	773SM1	POW81	SX	380	1998-2002
746CM46	746CM44	746SM1	773CM46	773CM44	773SM1			WK115L		746CM55	773SM1		EGS	400	1996-1999
746CM46	746CM44	746SM1	773CM46	773CM44	773SM1	OKBY19 / OKS303 / OKWL03		WK115L		746CM55	773SM1		EXC	400	1994-1999
746CM46	746CM44	746SM1	773CM46	773CM44	773SM1	OKBY19 / OKS303 / OKWL03		WK115L		746CM55	773SM1	POW81	EXC	400	2000-2003
746CM46	746CM44	746SM1	891CM46	891CM44	891SM1	OKBY19 / OKS303 / OKWL03	OKI80	WK115L		746CM55	891SM1	POW81	EXC	400	2004-2009
746CM46	746CM44	746SM1	891CM46	891CM44	891SM1	OKBY25 / OKS309 / OKWL14	OKI80	WK115L		746CM55	891SM1		EXC	400	2010-2011
746CM46	746CM44	746SM1	891CM46	891CM44	891SM1	OKBY19 / OKS303 / OKWL03	OKI80	WK115L		746CM55	891SM1	POW81	EXC G	400	2004-2006
746CM46	746CM44	746SM1	773CM46	773CM44	773SM1	OKBY19 / OKS303 / OKWL03		WK115L		746CM55	773SM1	POW81	SX	400	2000-2002
746CM46	746CM44	746SM1	891CM46	891CM44	891SM1	OKBY19 / OKS303 / OKWL03	OKI80	WK115L		746CM55	891SM1	POW81	XC W	400	2007-2008
746CM46	746CM44	746SM1	891CM46	891CM44	891SM1	OKBY19 / OKS303 / OKWL03	OKI80	WK115L		746CM55	891SM1		XC W	400	2009
746CM46	746CM44	746SM1	773CM46	773CM44	773SM1	OKBY19 / OKS303 / OKWL03		WK115L		746CM55	773SM1	POW81	EXC	450	2003
746CM46	746CM44	746SM1	891CM46	891CM44	891SM1	OKBY19 / OKS303 / OKWL03	OKI80	WK115L		746CM55	891SM1	POW81	EXC	450	2004-2009
746CM46	746CM44	746SM1	891CM46	891CM44	891SM1	OKBY25 / OKS309 / OKWL14	OKI80	WK115L		746CM55	891SM1		EXC	450	2010-2014
746CM46	746CM44	746SM1	891CM46	891CM44	891SM1	OKBY25 / OKS309 / OKWL14	OKI80			746CM55	891SM1		EXC	450	2015
746CM46	746CM44	746SM1	891CM46	891CM44	891SM1	OKBY19 / OKS303 / OKWL03	OKI80	WK115L		746CM55	891SM1	POW81	EXC R	450	2008-2009
746CM46	746CM44	746SM1	891CM46	891CM44	891SM1	OKBY25 / OKS309 / OKWL14	OKI80	WK115L		746CM55	891SM1		EXC SIX DAYS	450	2009-2015
746CM46	746CM44	746SM1	773CM46	773CM44	773SM1	OKBY19 / OKS303 / OKWL03		WK115L		746CM55	773SM1	POW81	MXC	450	2003
746CM46	746CM44	746SM1	891CM46	891CM44	891SM1	OKBY19 / OKS303 / OKWL03	OKI80	WK115L		746CM55	891SM1	POW81	MXC	450	2004-2006
746CM46	746CM44	746SM1	891CM46	891CM44	891SM1	OKBY19 / OKS303 / OKWL03	OKI80	WK115L		746CM55	891SM1	POW81	SX F	450	2003-2008
746CM46	746CM44	746SM1	891CM46	891CM44	891SM1	OKBY25 / OKS309 / OKWL14	OKI80	WK115L		746CM55	891SM1		SX F	450	2009-2012
746CM46	746CM44	746SM1	891CM46	891CM44	891SM1	OKBY25 / OKS309 / OKWL14	OKI89	WK115L		746CM55	891SM1		SX F	450	2013-2014
746CM46	746CM44	746SM1	891CM46	891CM44	891SM1	OKBY25 / OKI89 / OKS309 / OKWL14		WK115L		746CM55	891SM1		SX F	450	2015
746CM46	746CM44	746SM1	891CM46	891CM44	891SM1	OKBY19 / OKS303 / OKWL03	OKI80	WK115L		746CM55	891SM1	POW81	SXS	450	2003-2008
746CM46	746CM44	746SM1	891CM46	891CM44	891SM1	OKBY25 / OKS309 / OKWL14	OKI80	WK115L		746CM55	891SM1		SXS	450	2009-2010
746CM46	746CM44	746SM1	891CM46	891CM44	891SM1	OKBY19 / OKS303 / OKWL03	OKI80	WK115L		746CM55	891SM1	POW81	SXS F	450	2003-2008
746CM46	746CM44	746SM1	891CM46	891CM44	891SM1	OKBY25 / OKS309 / OKWL14	OKI80	WK115L		746CM55	891SM1		SXS F	450	2009-2010
746CM46	746CM44	746SM1	891CM46	891CM44	891SM1	OKBY19 / OKS303 / OKWL03	OKI80	WK115L		746CM55	891SM1	POW81	XC	450	2007-2008
746CM46	746CM44	746SM1	891CM46	891CM44	891SM1	OKBY19 / OKS303 / OKWL03	OKI80	WK115L		746CM55	891SM1		XC	450	2009
746CM46	746CM44	746SM1	891CM46	891CM44	891SM1	OKBY19 / OKS303 / OKWL03	OKI80	WK115L		746CM55	891SM1	POW81	XC F	450	2007-2008
746CM46	746CM44	746SM1	891CM46	891CM44	891SM1	OKBY19 / OKS303 / OKWL03	OKI80	WK115L		746CM55	891SM1		XC F	450	2009
746CM46	746CM44	746SM1	891CM46	891CM44	891SM1	OKBY19 / OKS303 / OKWL03	OKI80	WK115L		746CM55	891SM1	POW81	XC G	450	2006
746CM46	746CM44	746SM1	891CM46	891CM44	891SM1	OKBY19 / OKS303 / OKWL03	OKI80	WK115L		746CM55	891SM1	POW81	XC W	450	2007-2008
746CM46	746CM44	746SM1	891CM46	891CM44	891SM1	OKBY19 / OKS303 / OKWL03	OKI80	WK115L		746CM55	891SM1		XC W	450	2009
746CM46	746CM44	746SM1	891CM46	891CM44	891SM1	OKBY25 / OKS309 / OKWL14	OKI80	WK115L		746CM55	891SM1		EXC	500	2011-2014
746CM46	746CM44	746SM1	891CM46	891CM44	891SM1	OKBY25 / OKS309 / OKWL14	OKI80			746CM55	891SM1		EXC	500	2015
746CM46	746CM44	746SM1	891CM46	891CM44	891SM1	OKBY25 / OKS309 / OKWL14	OKI80	WK115L		746CM55	891SM1		EXC SIX DAYS	500	2011-2015
		612SM1											LC	500	1983-1985
		612SM1			612SM1						612SM1		LC	500	1986
		612SM1											MX	500	1983-1985
		612SM1			612SM1						612SM1		MX	500	1986

OFFROAD / FUORISTRADA			DISCHI / DISKS										SUPPORTI PINZA BRACKETS CALIPER	
			ANTERIORE / FRONT							POSTERIORE / REAR			DISK Ø260	DISK Ø270
MODELLO MODEL	CC	ANNO YEAR	BATFLY ALUMINIUM Ø270	S3 BATFLY CROSS Ø270	W-FLO Ø270	S3 BATFLY CROSS Ø260	W-FLO Ø260	W-FIX ØOEM	R-FIX ØOEM	BATFLY	W-FIX / W-FULL	R-FIX	Per pinza originale / For oem caliper	Per pinza originale / For oem caliper
MX	500	1987												
MX	500	1989-1991								BY4505	KT11RID / WF4505	KT11RI		
MX	500	1992	BY4124	S34006	WL4007	S34005		KT02FID		BY4505	KT11RID / WF4505	KT11RI		POW68
SX	500	1993-1994	BY4124	S34006	WL4007	S34005		KT02FID		BY4505	KT11RID / WF4505	KT11RI		POW68
SX	500	1995	BY4124	S34006	WL4007	S34005		KT02FID		BY4505	KT11RID / WF4505	KT11RI		POW68
XC	500	1983-1985												
SX F	505	2007-2008	BY4124	S34006	WL4007	S34005		KT02FID		BY4505	KT11RID / WF4505	KT11RI		POW68
SX F	505	2009	BY4124	S34006	WL4007	S34005		KT02FID		BY4505	KT11RID / WF4505	KT11RI		PW4008
XC F	505	2007-2008	BY4124	S34006	WL4007	S34005		KT02FID		BY4505	KT11RID / WF4505	KT11RI		POW68
XC F	505	2009	BY4124	S34006	WL4007	S34005		KT02FID		BY4505	KT11RID / WF4505	KT11RI		POW68
EXC	520	2000-2002	BY4124	S34006	WL4007	S34005		KT02FID		BY4505	KT11RID / WF4505	KT11RI		POW68
MXC	520	2001-2002	BY4124	S34006	WL4007	S34005		KT02FID		BY4505	KT11RID / WF4505	KT11RI		POW68
SX	520	2000-2002	BY4124	S34006	WL4007	S34005		KT02FID		BY4505	KT11RID / WF4505	KT11RI		POW68
EXC	525	2003	BY4124	S34006	WL4007	S34005		KT02FID		BY4505	KT11RID / WF4505	KT11RI		POW68
EXC	525	2004-2008	BY4124	S34006	WL4007	S34005		KT02FID		BY4505	KT11RID / WF4505	KT11RI		POW68
MXC	525	2003	BY4124	S34006	WL4007	S34005		KT02FID		BY4505	KT11RID / WF4505	KT11RI		POW68
MXC	525	2004-2005	BY4124	S34006	WL4007	S34005		KT02FID		BY4505	KT11RID / WF4505	KT11RI		POW68
SX	525	2003	BY4124	S34006	WL4007	S34005		KT02FID		BY4505	KT11RID / WF4505	KT11RI		POW68
SX	525	2004-2006	BY4124	S34006	WL4007	S34005		KT02FID		BY4505	KT11RID / WF4505	KT11RI		POW68
XC	525	2006-2008	BY4124	S34006	WL4007	S34005		KT02FID		BY4505	KT11RID / WF4505	KT11RI		POW68
XC G	525	2006-2008	BY4124	S34006	WL4007	S34005		KT02FID		BY4505	KT11RID / WF4505	KT11RI		POW68
XC W	525	2006-2008	BY4124	S34006	WL4007	S34005		KT02FID		BY4505	KT11RID / WF4505	KT11RI		POW68
EXC	530	2010-2011	BY4124	S34006	WL4007	S34005		KT02FID		BY4505	KT11RID / WF4505	KT11RI		PW4008
EXC R	530	2008-2009	BY4124	S34006	WL4007	S34005		KT02FID		BY4505	KT11RID / WF4505	KT11RI		POW68
EXC SIX DAYS	530	2009	BY4124	S34006	WL4007	S34005		KT02FID		BY4505	KT11RID / WF4505	KT11RI		PW4008
SXC	540	1999-2000	BY4124	S34006	WL4007	S34005		KT02FID		BY4505	KT11RID / WF4505	KT11RI		POW68
SXS	540	2001-2002	BY4124	S34006	WL4007	S34005		KT02FID		BY4505	KT11RID / WF4505	KT11RI		POW68
SXS	540	2003-2006	BY4124	S34006	WL4007	S34005		KT02FID		BY4505	KT11RID / WF4505	KT11RI		POW68
GS	600	1993	BY4124	S34006	WL4007	S34005		KT02FID		BY4505	KT11RID / WF4505	KT11RI		POW68
MX	600	1990-1991								BY4505	KT11RID / WF4505	KT11RI		
MX	600	1992	BY4124	S34006	WL4007	S34005		KT02FID		BY4505	KT11RID / WF4505	KT11RI		
LC4 SC SUPERCOMP	620	1998-1999	BY4124	S34006	WL4007	S34005		KT02FID		BY4505	KT11RID / WF4505	KT11RI		
LC4 SC SUPERCOMP	620	2000-2004	BY4124	S34006	WL4007	S34005		KT02FID		BY4505	KT11RID / WF4505	KT11RI		
LC4 SC SUPERCOMP	625	2002	BY4124	S34006	WL4007	S34005		KT02FID		BY4505	KT11RID / WF4505	KT11RI		POW68
SXC	625	2003-2008	BY4124	S34006	WL4007	S34005		KT02FID		BY4505	KT11RID / WF4505	KT11RI		POW68
ENDURO	690	2008-2010												
ENDURO R	690	2008-2014												
KYMCO														
STRYKER	150	2000-2006												
MBK														
X-LIMIT ENDURO	50	2003-2010												
MONTESA														
COTA	50	1989												
COTA 304	125	1986-1990												
315 R	250	2001												
COTA 315 R	250	1997												
COTA 4RT	250	2005-2007												
COTA 304	258	1986-1989												
COTA 307	258	1987-1990												
COTA 309	258	1989-1990												
COTA 310	258	1990-1992												
COTA 311	258	1992-1996												
COTA 330	258	1985-1987												
COTA 335	258	1987-1989												
COTA 314	260	1997												
RIEJU														
MRT PRO	50	2009-2014												
SCORPA														
SY F	125	2006-2007												
TY-S F	125	2006-2007												
SY F	175	2006-2007												
TY-S F	175	2006-2007												
SY	250	2002-2007												
SY F	250	2006-2007												

								TRASFORMAZIONE MOTARD MOTARD TRASFORMATION					OFFROAD / FUORISTRADA		
PASTIGLIE / PADS			PASTIGLIE / PADS			KIT MAGGIORAZIONE OVERSIZE KIT		DISCO DISK	PASTIGLIE PADS			SUPPORTO PINZA BRACKET CALIPER			
ANTERIORE / FRONT			POSTERIORE / REAR			ANTERIORE FRONT	POSTERIORE REAR	ANTERIORE FRONT	ANTERIORE FRONT		POSTERIORE REAR	DISK Ø320			
CM46	CM44	SM1	CM46	CM44	SM1	OKI	OKI	SK2	CM66	CM55	SM1	Per pinza originale For oem caliper	MODELLO MODEL	CC	ANNO YEAR
		726SM1			726SM1						726SM1		MX	500	1987
	669CM44	669SM1		669CM44	669SM1						669SM1		MX	500	1989-1991
746CM46	746CM44	746SM1		669CM44	669SM1	OKWL03		WK115L		746CM55	669SM1	POW81	MX	500	1992
746CM46	746CM44	746SM1		669CM44	669SM1	OKBY19 / OKS303 / OKWL03		WK115L		746CM55	669SM1	POW81	SX	500	1993-1994
746CM46	746CM44	746SM1	773CM46	773CM44	773SM1	OKBY19 / OKS303 / OKWL03		WK115L		746CM55	773SM1	POW81	SX	500	1995
		612SM1											XC	500	1983-1985
746CM46	746CM44	746SM1	891CM46	891CM44	891SM1	OKBY19 / OKS303 / OKWL03	OKI80	WK115L		746CM55	891SM1		SX F	505	2007-2008
746CM46	746CM44	746SM1	891CM46	891CM44	891SM1	OKBY25 / OKS309 / OKWL14	OKI80	WK115L		746CM55	891SM1		SX F	505	2009
746CM46	746CM44	746SM1	891CM46	891CM44	891SM1	OKBY19 / OKS303 / OKWL03	OKI80	WK115L		746CM55	891SM1	POW81	XC F	505	2007-2008
746CM46	746CM44	746SM1	891CM46	891CM44	891SM1	OKBY19 / OKS303 / OKWL03	OKI80	WK115L		746CM55	891SM1		XC F	505	2009
746CM46	746CM44	746SM1	773CM46	773CM44	773SM1	OKBY19 / OKS303 / OKWL03		WK115L		746CM55	773SM1	POW81	EXC	520	2000-2002
746CM46	746CM44	746SM1	773CM46	773CM44	773SM1	OKBY19 / OKS303 / OKWL03		WK115L		746CM55	773SM1	POW81	MXC	520	2001-2002
746CM46	746CM44	746SM1	773CM46	773CM44	773SM1	OKBY19 / OKS303 / OKWL03		WK115L		746CM55	773SM1	POW81	SX	520	2000-2002
746CM46	746CM44	746SM1	773CM46	773CM44	773SM1	OKBY19 / OKS303 / OKWL03		WK115L		746CM55	773SM1	POW81	EXC	525	2003
746CM46	746CM44	746SM1	891CM46	891CM44	891SM1	OKBY19 / OKS303 / OKWL03	OKI80	WK115L		746CM55	891SM1	POW81	EXC	525	2004-2008
746CM46	746CM44	746SM1	773CM46	773CM44	773SM1	OKBY19 / OKS303 / OKWL03		WK115L		746CM55	773SM1	POW81	MXC	525	2003
746CM46	746CM44	746SM1	891CM46	891CM44	891SM1	OKBY19 / OKS303 / OKWL03	OKI80	WK115L		746CM55	891SM1	POW81	MXC	525	2004-2005
746CM46	746CM44	746SM1	773CM46	773CM44	773SM1	OKBY19 / OKS303 / OKWL03		WK115L		746CM55	773SM1	POW81	SX	525	2003
746CM46	746CM44	746SM1	891CM46	891CM44	891SM1	OKBY19 / OKS303 / OKWL03	OKI80	WK115L		746CM55	891SM1	POW81	SX	525	2004-2006
746CM46	746CM44	746SM1	891CM46	891CM44	891SM1	OKBY19 / OKS303 / OKWL03	OKI80	WK115L		746CM55	891SM1	POW81	XC	525	2006-2008
746CM46	746CM44	746SM1	891CM46	891CM44	891SM1	OKBY19 / OKS303 / OKWL03	OKI80	WK115L		746CM55	891SM1	POW81	XC G	525	2006-2008
746CM46	746CM44	746SM1	891CM46	891CM44	891SM1	OKBY19 / OKS303 / OKWL03	OKI80	WK115L		746CM55	891SM1	POW81	XC W	525	2006-2008
746CM46	746CM44	746SM1	891CM46	891CM44	891SM1	OKBY25 / OKS309 / OKWL14	OKI80	WK115L		746CM55	891SM1		EXC	530	2010-2011
746CM46	746CM44	746SM1	891CM46	891CM44	891SM1	OKBY19 / OKS303 / OKWL03	OKI80	WK115L		746CM55	891SM1	POW81	EXC R	530	2008-2009
746CM46	746CM44	746SM1	891CM46	891CM44	891SM1	OKBY25 / OKS309 / OKWL14	OKI80	WK115L		746CM55	891SM1		EXC SIX DAYS	530	2009
746CM46	746CM44	746SM1	773CM46	773CM44	773SM1	OKBY19 / OKS303 / OKWL03		WK115L		746CM55	773SM1	POW81	SXC	540	1999-2000
746CM46	746CM44	746SM1	773CM46	773CM44	773SM1	OKBY19 / OKS303 / OKWL03		WK115L		746CM55	773SM1	POW81	SXS	540	2001-2002
746CM46	746CM44	746SM1	891CM46	891CM44	891SM1	OKBY19 / OKS303 / OKWL03	OKI80	WK115L		746CM55	891SM1	POW81	SXS	540	2003-2006
746CM46	746CM44	746SM1		669CM44	669SM1	OKBY19 / OKS303 / OKWL03		WK115L		746CM55	669SM1	POW81	GS	600	1993
	669CM44	669SM1		669CM44	669SM1						669SM1		MX	600	1990-1991
746CM46	746CM44	746SM1		669CM44	669SM1			WK115L		746CM55	669SM1		MX	600	1992
746CM46	746CM44	746SM1	773CM46	773CM44	773SM1			WK115L		746CM55	773SM1		LC4 SC SUPERCOMP	620	1998-1999
746CM46	746CM44	746SM1	773CM46	773CM44	773SM1			WK115L		746CM55	773SM1	POW81	LC4 SC SUPERCOMP	620	2000-2004
746CM46	746CM44	746SM1	773CM46	773CM44	773SM1	OKBY19 / OKS303 / OKWL03		WK115L		746CM55	773SM1	POW81	LC4 SC SUPERCOMP	625	2002
746CM46	746CM44	746SM1	773CM46	773CM44	773SM1	OKBY19 / OKS303 / OKWL03		WK115L		746CM55	773SM1	POW81	SXC	625	2003-2008
		780SM1	773CM46	773CM44	773SM1						773SM1		ENDURO	690	2008-2010
		780SM1	773CM46	773CM44	773SM1						773SM1		ENDURO R	690	2008-2014
													KYMCO		
		795SM1											STRYKER	150	2000-2006
													MBK		
		878SM1			878SM1						878SM1		X-LIMIT ENDURO	50	2003-2010
													MONTESA		
		621SM1											COTA	50	1989
		621SM1											COTA 304	125	1986-1990
		831SM1			832SM1						832SM1		315 R	250	2001
		621SM1			612SM1						612SM1		COTA 315 R	250	1997
		831SM1			832SM1						832SM1		COTA 4RT	250	2005-2007
		621SM1											COTA 304	258	1986-1989
		621SM1			621SM1						621SM1		COTA 307	258	1987-1990
		621SM1			612SM1						612SM1		COTA 309	258	1989-1990
		621SM1			612SM1						612SM1		COTA 310	258	1990-1992
		621SM1			612SM1						612SM1		COTA 311	258	1992-1996
		621SM1			621SM1						621SM1		COTA 330	258	1985-1987
		621SM1			621SM1						621SM1		COTA 335	258	1987-1989
		621SM1			612SM1						612SM1		COTA 314	260	1997
													RIEJU		
		828SM1											MRT PRO	50	2009-2014
													SCORPA		
		621SM1			832SM1						832SM1		SY F	125	2006-2007
		621SM1			832SM1						832SM1		TY-S F	125	2006-2007
		621SM1			832SM1						832SM1		SY F	175	2006-2007
		621SM1			832SM1						832SM1		TY-S F	175	2006-2007
		831SM1			832SM1						832SM1		SY	250	2002-2007
		831SM1			832SM1						832SM1		SY F	250	2006-2007

OFFROAD / FUORISTRADA

			DISCHI / DISKS										SUPPORTI PINZA BRACKETS CALIPER	
			ANTERIORE / FRONT							POSTERIORE / REAR			DISK Ø260	DISK Ø270
MODELLO MODEL	CC	ANNO YEAR	BATFLY ALUMINIUM Ø270	S3 BATFLY CROSS Ø270	W-FLO Ø270	S3 BATFLY CROSS Ø260	W-FLO Ø260	W-FIX ØOEM	R-FIX ØOEM	BATFLY	W-FIX / W-FULL	R-FIX	Per pinza originale / For oem caliper	Per pinza originale / For oem caliper
SHERCO														
0.8	80	2004-2010												
1.25	125	1999-2002												
1.25	125	2003-2005												
2.5	250	1999-2002												
2.5	250	2003-2005												
2.5i 4T ENDURO	250	2006-2011												
SE i	250	2013-2014												
SE-R	250	2013-2014												
SEF	250	2013-2014												
SEF-R	250	2013-2014												
2.9	272	2003												
2.9	290	1999-2005												
SE i	300	2013-2014												
SE-R	300	2013-2014												
SEF	300	2013-2014												
SEF-R	300	2013-2014												
3.2 4T	320	2004-2012												
4.5i 4T ENDURO	450	2007-2011												
5.1i 4T ENDURO	510	2006-2011												
SUZUKI														
RMX	50	2000												
RM	65	2003-2005						KW32RID			KW32RID			
RM	80	1990-1995						SZ26FID			SZ26RID			
RM	80	1996-2001						SZ26FID			SZ26RID			
RM X	80	1986-1989												
RM X	80	1993												
RM	85	2002-2004						SZ26FID			SZ26RID			
RM	85	2005-2011						YA22FID			SZ38RID			
RM	100	2003-2004												
DR Z L (Rear Drum Model)	125	2003-2013												
RM	125	1985-1986												
RM	125	1987												
RM	125	1988	BY4127	S34009	WL4010			SZ01FID			SZ01RID			
RM	125	1989-1995	BY4127	S34009	WL4010			SZ01FID			SZ01RID			
RM	125	1996-1999	BY4127	S34009	WL4010			SZ01FID			SZ01RID			POW02
RM	125	2000-2005	BY4127	S34009	WL4010			SZ01FID			SZ21RID			POW02
RM	125	2006-2009	BY4127	S34009	WL4010			SZ01FID			SZ40RID			POW02
DR S	250	1986-1989												
DR S	250	1990										SZ05RI		
DR Z	250	2001-2007												
RM	250	1987-1988												
RM	250	1989-1995	BY4127	S34009	WL4010			SZ01FID			SZ01RID			
RM	250	1996-1999	BY4127	S34009	WL4010			SZ01FID			SZ01RID			POW02
RM	250	2000-2005	BY4127	S34009	WL4010			SZ01FID			SZ21RID			POW02
RM	250	2006-2012	BY4127	S34009	WL4010			SZ01FID			SZ40RID			POW02
RMX S	250	1992-1998	BY4127	S34009	WL4010			SZ01FID			SZ01RID			
RMZ	250	2004-2006	BY4125	S34007				KW35FID		BY4502	KW41RID			POW02
RMZ	250	2007-2015	BY4128	S34010	WL4012			SZ37FID		BY4503	SZ44RID			POW02
DR S	350	1989-1993										SZ05RI		
DR S	350	1996-1999										SZ05RI		
DRZ E	400	2000-2008	BY4127	S34009	WL4010			SZ01FID			SZ01RID			POW02
DRZ S	400	2000-2009	BY4127	S34009	WL4010			SZ01FID			SZ01RID			POW02
RMX	450	2010-2012	BY4128	S34010	WL4012			SZ37FID		BY4503	SZ44RID			POW02
RMZ	450	2005-2015	BY4128	S34010	WL4012			SZ37FID		BY4503	SZ44RID			POW02
RM	500	1985-1986												
RM	500	1987-1989												
DR S	600	1985-1986							SZ02FI					
DR S DAKAR	600	1985-1989							SZ02FI					
TM														
EN	80	1998-2001			WL4014									
EN	80	2002-2003			WL4014									
GS- MC	80	1986-1989												
GS- MC	80	1990-1992												

OFFROAD / FUORISTRADA

			PASTIGLIE / PADS			PASTIGLIE / PADS			KIT MAGGIORAZIONE OVERSIZE KIT		TRASFORMAZIONE MOTARD / MOTARD TRASFORMATION: DISCO DISK	PASTIGLIE PADS			SUPPORTO PINZA BRACKET CALIPER
			ANTERIORE / FRONT			POSTERIORE / REAR			ANTERIORE FRONT	POSTERIORE REAR	ANTERIORE FRONT	ANTERIORE FRONT		POSTERIORE REAR	DISK Ø320
MODELLO MODEL	CC	ANNO YEAR	CM46	CM44	SM1	CM46	CM44	SM1	OKI	OKI	SK2	CM66	CM55	SM1	Per pinza originale For oem caliper
SHERCO															
0.8	80	2004-2010			831SM1			832SM1						832SM1	
1.25	125	1999-2002			621SM1			621SM1						621SM1	
1.25	125	2003-2005			831SM1			832SM1						832SM1	
2.5	250	1999-2002			621SM1			621SM1						621SM1	
2.5	250	2003-2005			831SM1			832SM1						832SM1	
2.5i 4T ENDURO	250	2006-2011	746CM46	746CM44	746SM1	701CM46	701CM44	701SM1						701SM1	
SE i	250	2013-2014	746CM46	746CM44	746SM1	891CM46	891CM44	891SM1						891SM1	
SE-R	250	2013-2014	746CM46	746CM44	746SM1	891CM46	891CM44	891SM1						891SM1	
SEF	250	2013-2014	746CM46	746CM44	746SM1	891CM46	891CM44	891SM1						891SM1	
SEF-R	250	2013-2014	746CM46	746CM44	746SM1	891CM46	891CM44	891SM1						891SM1	
2.9	272	2003			831SM1			832SM1						832SM1	
2.9	290	1999-2005			621SM1			621SM1						621SM1	
SE i	300	2013-2014	746CM46	746CM44	746SM1	891CM46	891CM44	891SM1						891SM1	
SE-R	300	2013-2014	746CM46	746CM44	746SM1	891CM46	891CM44	891SM1						891SM1	
SEF	300	2013-2014	746CM46	746CM44	746SM1	891CM46	891CM44	891SM1						891SM1	
SEF-R	300	2013-2014	746CM46	746CM44	746SM1	891CM46	891CM44	891SM1						891SM1	
3.2 4T	320	2004-2012			831SM1			832SM1						832SM1	
4.5i 4T ENDURO	450	2007-2011	746CM46	746CM44	746SM1	701CM46	701CM44	701SM1						701SM1	
5.1i 4T ENDURO	510	2006-2011	746CM46	746CM44	746SM1	701CM46	701CM44	701SM1						701SM1	
SUZUKI															
RMX	50	2000			621SM1			621SM1						621SM1	
RM	65	2003-2005		894CM44		686CM46	686CM44	686SM1						686SM1	
RM	80	1990-1995		702CM44	702SM1		702CM44	702SM1						702SM1	
RM	80	1996-2001			785SM1		702CM44	702SM1						702SM1	
RM X	80	1986-1989		702CM44	702SM1										
RM X	80	1993		669CM44	669SM1		669CM44	669SM1						669SM1	
RM	85	2002-2004			785SM1		702CM44	702SM1						702SM1	
RM	85	2005-2011		812CM44			905CM44								
RM	100	2003-2004		812CM44		686CM46	686CM44	686SM1						686SM1	
DR Z L (Rear Drum Model)	125	2003-2013			785SM1										
RM	125	1985-1986			681SM1										
RM	125	1987		696CM44	696SM1										
RM	125	1988		696CM44	696SM1	686CM46	686CM44	686SM1			WK055L			686SM1	
RM	125	1989-1995		696CM44	696SM1		722CM44	722SM1			WK055L			722SM1	
RM	125	1996-1999	772CM46	772CM44	772SM1	701CM46	701CM44	701SM1	OKWL06		WK055L			701SM1	POW84
RM	125	2000-2005	772CM46	772CM44	772SM1	701CM46	701CM44	701SM1	OKWL06		WK055L			701SM1	POW84
RM	125	2006-2009	772CM46	772CM44	772SM1	701CM46	701CM44	701SM1	OKWL06		WK055L			701SM1	POW84
DR S	250	1986-1989		703CM44	703SM1										
DR S	250	1990		696CM44	696SM1		722CM44	722SM1						722SM1	
DR Z	250	2001-2007			746SM1			722SM1					746CM55	722SM1	
RM	250	1987-1988		696CM44	696SM1	686CM46	686CM44	686SM1						686SM1	
RM	250	1989-1995		696CM44	696SM1		722CM44	722SM1			WK055L			722SM1	
RM	250	1996-1999	772CM46	772CM44	772SM1	701CM46	701CM44	701SM1	OKWL06		WK055L			701SM1	POW84
RM	250	2000-2005	772CM46	772CM44	772SM1	701CM46	701CM44	701SM1	OKWL06		WK055L			701SM1	POW84
RM	250	2006-2012	772CM46	772CM44	772SM1	701CM46	701CM44	701SM1	OKWL06		WK055L			701SM1	POW84
RMX S	250	1992-1998		696CM44	696SM1		722CM44	722SM1			WK055L			722SM1	
RMZ	250	2004-2006	772CM46	772CM44	772SM1	890CM46	890CM44	890SM1	OKBY20 / OKS304					890SM1	POW84
RMZ	250	2007-2015	772CM46	772CM44	772SM1	890CM46	890CM44	890SM1	OKBY24 / OKS308 / OKWL12		WK077L			890SM1	POW84
DR S	350	1989-1993		696CM44	696SM1		722CM44	722SM1						722SM1	
DR S	350	1996-1999		696CM44	696SM1		722CM44	722SM1						722SM1	
DRZ E	400	2000-2008	772CM46	772CM44	772SM1	701CM46	701CM44	701SM1	OKWL06		WK055L			701SM1	POW84
DRZ S	400	2000-2009	772CM46	772CM44	772SM1	701CM46	701CM44	701SM1	OKWL06		WK055L			701SM1	POW84
RMX	450	2010-2012	772CM46	772CM44	772SM1	890CM46	890CM44	890SM1	OKBY24 / OKS308 / OKWL12		WK077L			890SM1	POW84
RMZ	450	2005-2015	772CM46	772CM44	772SM1	890CM46	890CM44	890SM1	OKBY24 / OKS308 / OKWL12		WK077L			890SM1	POW84
RM	500	1985-1986			681SM1										
RM	500	1987-1989		696CM44	696SM1	686CM46	686CM44	686SM1						686SM1	
DR S	600	1985-1986			681SM1										
DR S DAKAR	600	1985-1989			681SM1										
TM															
EN	80	1998-2001	746CM46	746CM44	746SM1	773CM46	773CM44	773SM1					746CM55	773SM1	
EN	80	2002-2003	746CM46	746CM44	746SM1	701CM46	701CM44	701SM1					746CM55	701SM1	
GS- MC	80	1986-1989						612SM1						612SM1	
GS- MC	80	1990-1992					669CM44	669SM1						669SM1	

FUORISTRADA / OFFROAD

OFFROAD / FUORISTRADA

			DISCHI / DISKS										SUPPORTI PINZA BRACKETS CALIPER	
			ANTERIORE / FRONT							POSTERIORE / REAR			DISK Ø260	DISK Ø270
MODELLO MODEL	CC	ANNO YEAR	BATFLY ALUMINIUM Ø270	S3 BATFLY CROSS Ø270	W-FLO Ø270	S3 BATFLY CROSS Ø260	W-FLO Ø260	W-FIX ØOEM	R-FIX ØOEM	BATFLY	W-FIX / W-FULL	R-FIX	Per pinza originale / For oem caliper	Per pinza originale / For oem caliper
GS- MC	80	1993-1997												
MX JR	85	2003-2011			WL4014									
MX JR	85	2012-2014												
EN	125	1998-2001			WL4014									
EN	125	2002-2004			WL4014									
EN	125	2005-2014			WL4014									
GS- MC	125	1986-1989												
GS- MC	125	1990-1992						YA06FID	YA06FI		YA01RID	YA01RI		
GS- MC	125	1993-1997												
MX	125	1998-2002			WL4014									
MX	125	2003-2004			WL4014									
MX	125	2005-2011			WL4014									
MX	125	2012-2014			WL4014									
EN	144	2008-2012			WL4014									
EN	144	2013-2014			WL4014									
MX	144	2007-2014			WL4014									
EN	250	1998-2001			WL4014									
EN	250	2002-2004			WL4014									
EN	250	2005-2010			WL4014									
EN	250	2011-2012			WL4014									
EN	250	2013-2014			WL4014									
EN F	250	2004-2012			WL4014									
EN Fi	250	2010-2011			WL4014									
EN Fi	250	2012-2014			WL4014									
GS- MC	250	1995-1997												
MX	250	1998-2001			WL4014									
MX	250	2002-2004			WL4014									
MX	250	2005-2014			WL4014									
MX Fi	250	2010-2011			WL4014									
MX Fi	250	2012-2014			WL4014									
EN	300	2005-2014			WL4014									
MX	300	2005-2014			WL4014									
MX	400	2003			WL4014									
SMF F	400	2002												
EN F	450	2005-2014			WL4014									
MX F	450	2005-2014			WL4014									
EN F	530	2005-2014			WL4014									
MX F	530	2005-2014			WL4014									
VOR														
MX- EN	400	2000-2002												
EN E	450	2003												
MX- EN	450	2000-2002												
SM RC	450	2002												
492 ENDURO	495	1998-1999												
495 CROSS	495	1998-1999												
495 SM	495	1999												
MX- EN	503	2000-2002						YA01RID	YA01RI					
SM RC	530	2000-2002												
YAMAHA														
YZ	80	1986-1992						KW18RID			KW18RID			
YZ	80	1993-2001						YA22FID			YA22RID			
YZ	85	2002-2015						YA22FID			YA22RID			
DT X	125	2005-2006												
TT R	125	2000-2007												
WR	125	1989						YA06FID	YA06FI		YA01RID	YA01RI		
WR	125	1990-1997									YA01RID	YA01RI		
WR	125	1998-2000	BY4127	S34009	WL4010				YA10FI		YA10RID	YA10RI	POW13	POW04
WR	125	2001	BY4127	S34009	WL4010			SZ01FID			YA10RID	YA10RI	POW13	POW04
WR	125	2002	BY4127	S34009	WL4010			SZ01FID		BY4506	YA52RID / WF4507		POW13	POW04
WR	125	2003-2007	BY4127	S34009	WL4010			SZ01FID		BY4506	YA52RID / WF4507		POW13	POW04
WR R	125	2009-2011												
YZ	125	1985-1987						YA06FID	YA06FI					
YZ	125	1988						YA06FID	YA06FI		YA01RID	YA01RI		
YZ	125	1989						YA06FID	YA06FI		YA01RID	YA01RI		
YZ	125	1990-1997									YA01RID	YA01RI		

OFFROAD / FUORISTRADA

PASTIGLIE / PADS			PASTIGLIE / PADS			KIT MAGGIORAZIONE OVERSIZE KIT		TRASFORMAZIONE MOTARD MOTARD TRASFORMATION: DISCO DISK	PASTIGLIE PADS			SUPPORTO PINZA BRACKET CALIPER			
ANTERIORE / FRONT			POSTERIORE / REAR			ANTERIORE FRONT	POSTERIORE REAR	ANTERIORE FRONT	ANTERIORE FRONT		POSTERIORE REAR	DISK Ø320			
CM46	CM44	SM1	CM46	CM44	SM1	OKI	OKI	SK2	CM66	CM55	SM1	Per pinza originale For oem caliper	MODELLO MODEL	CC	ANNO YEAR
746CM46	746CM44	746SM1	773CM46	773CM44	773SM1					746CM55	773SM1		GS- MC	80	1993-1997
746CM46	746CM44	746SM1	701CM46	701CM44	701SM1					746CM55	701SM1		MX JR	85	2003-2011
746CM46	746CM44	746SM1	701CM46	701CM44	701SM1					746CM55	701SM1		MX JR	85	2012-2014
746CM46	746CM44	746SM1	773CM46	773CM44	773SM1					746CM55	773SM1		EN	125	1998-2001
746CM46	746CM44	746SM1	701CM46	701CM44	701SM1					746CM55	701SM1		EN	125	2002-2004
746CM46	746CM44	746SM1	890CM46	890CM44	890SM1					746CM55	890SM1		EN	125	2005-2014
					612SM1						612SM1		GS- MC	125	1986-1989
				669CM44	669SM1						669SM1		GS- MC	125	1990-1992
746CM46	746CM44	746SM1	773CM46	773CM44	773SM1					746CM55	773SM1		GS- MC	125	1993-1997
746CM46	746CM44	746SM1	773CM46	773CM44	773SM1					746CM55	773SM1		MX	125	1998-2002
746CM46	746CM44	746SM1	701CM46	701CM44	701SM1					746CM55	701SM1		MX	125	2003-2004
746CM46	746CM44	746SM1	890CM46	890CM44	890SM1					746CM55	890SM1		MX	125	2005-2011
746CM46	746CM44	746SM1	890CM46	890CM44	891SM1					746CM55	891SM1		MX	125	2012-2014
746CM46	746CM44	746SM1	890CM46	890CM44	890SM1						890SM1		EN	144	2008-2012
746CM46	746CM44	746SM1	890CM46	890CM44	890SM1					746CM55	890SM1		EN	144	2013-2014
746CM46	746CM44	746SM1	890CM46	890CM44	890SM1					746CM55	890SM1		MX	144	2007-2014
746CM46	746CM44	746SM1	773CM46	773CM44	773SM1					746CM55	773SM1		EN	250	1998-2001
746CM46	746CM44	746SM1	701CM46	701CM44	701SM1					746CM55	701SM1		EN	250	2002-2004
746CM46	746CM44	746SM1	890CM46	890CM44	890SM1					746CM55	890SM1		EN	250	2005-2010
746CM46	746CM44	746SM1	890CM46	890CM44	890SM1						890SM1		EN	250	2011-2012
746CM46	746CM44	746SM1	890CM46	890CM44	890SM1					746CM55	890SM1		EN	250	2013-2014
746CM46	746CM44	746SM1	890CM46	890CM44	890SM1						890SM1		EN F	250	2004-2012
746CM46	746CM44	746SM1	890CM46	890CM44	890SM1						890SM1		EN Fi	250	2010-2011
746CM46	746CM44	746SM1	890CM46	890CM44	890SM1					746CM55	890SM1		EN Fi	250	2012-2014
746CM46	746CM44	746SM1	773CM46	773CM44	773SM1					746CM55	773SM1		GS- MC	250	1995-1997
746CM46	746CM44	746SM1	773CM46	773CM44	773SM1					746CM55	773SM1		MX	250	1998-2001
746CM46	746CM44	746SM1	701CM46	701CM44	701SM1					746CM55	701SM1		MX	250	2002-2004
746CM46	746CM44	746SM1	890CM46	890CM44	890SM1					746CM55	890SM1		MX	250	2005-2014
746CM46	746CM44	746SM1	890CM46	890CM44	890SM1						890SM1		MX Fi	250	2010-2011
746CM46	746CM44	746SM1	890CM46	890CM44	890SM1					746CM55	890SM1		MX Fi	250	2012-2014
746CM46	746CM44	746SM1	890CM46	890CM44	890SM1					746CM55	890SM1		EN	300	2005-2014
746CM46	746CM44	746SM1	890CM46	890CM44	890SM1					746CM55	890SM1		MX	300	2005-2014
746CM46	746CM44	746SM1	701CM46	701CM44	701SM1					746CM55	701SM1		MX	400	2003
		688SM1	701CM46	701CM44	701SM1				688CM66	688CM55	701SM1		SMF F	400	2002
746CM46	746CM44	746SM1	890CM46	890CM44	890SM1					746CM55	890SM1		EN F	450	2005-2014
746CM46	746CM44	746SM1	890CM46	890CM44	890SM1					746CM55	890SM1		MX F	450	2005-2014
746CM46	746CM44	746SM1	890CM46	890CM44	890SM1					746CM55	890SM1		EN F	530	2005-2014
746CM46	746CM44	746SM1	890CM46	890CM44	890SM1					746CM55	890SM1		MX F	530	2005-2014
													VOR		
			773CM46	773CM44	773SM1						773SM1		MX- EN	400	2000-2002
746CM46	746CM44	746SM1	773CM46	773CM44	773SM1					746CM55	773SM1		EN E	450	2003
746CM46	746CM44	746SM1	773CM46	773CM44	773SM1					746CM55	773SM1		MX- EN	450	2000-2002
		688SM1	773CM46	773CM44	773SM1				688CM66	688CM55	773SM1		SM RC	450	2002
746CM46	746CM44	746SM1	773CM46	773CM44	773SM1					746CM55	773SM1		492 ENDURO	495	1998-1999
746CM46	746CM44	746SM1	773CM46	773CM44	773SM1					746CM55	773SM1		495 CROSS	495	1998-1999
		688SM1	773CM46	773CM44	773SM1				688CM66	688CM55	773SM1		495 SM	495	1999
746CM46	746CM44	746SM1	773CM46	773CM44	773SM1					746CM55	773SM1		MX- EN	503	2000-2002
		784SM1	773CM46	773CM44	773SM1				784CM66	784CM55	773SM1		SM RC	530	2000-2002
													YAMAHA		
	705CM44	705SM1											YZ	80	1986-1992
	705CM44	705SM1	686CM46	686CM44	686SM1						686SM1		YZ	80	1993-2001
	705CM44	705SM1	686CM46	686CM44	686SM1						686SM1		YZ	85	2002-2015
		780SM1			722SM1					780CM55	722SM1		DT X	125	2005-2006
	705CM44	705SM1											TT R	125	2000-2007
	696CM44	696SM1		722CM44	722SM1						722SM1		WR	125	1989
	696CM44	696SM1		722CM44	722SM1						722SM1		WR	125	1990-1997
772CM46	772CM44	772SM1	701CM46	701CM44	701SM1	OKBY22 / OKS306 / OKWL07		WK055L			701SM1	POW80	WR	125	1998-2000
772CM46	772CM44	772SM1	701CM46	701CM44	701SM1	OKBY22 / OKS306 / OKWL07		WK055L			701SM1	POW80	WR	125	2001
772CM46	772CM44	772SM1	701CM46	701CM44	701SM1	OKBY22 / OKS306 / OKWL07		WK055L			701SM1	POW80	WR	125	2002
772CM46	772CM44	772SM1	890CM46	890CM44	890SM1	OKBY22 / OKS306 / OKWL07		WK055L			890SM1	POW80	WR	125	2003-2007
		716SM1	773CM46	773CM44	773SM1					716CM55	773SM1		WR R	125	2009-2011
		687SM1											YZ	125	1985-1987
		687SM1			685SM1						685SM1		YZ	125	1988
	696CM44	696SM1	686CM46	686CM44	686SM1						686SM1		YZ	125	1989
	696CM44	696SM1		722CM44	722SM1						722SM1		YZ	125	1990-1997

OFFROAD / FUORISTRADA

			DISCHI / DISKS										SUPPORTI PINZA BRACKETS CALIPER	
			ANTERIORE / FRONT							POSTERIORE / REAR			DISK Ø260	DISK Ø270
MODELLO MODEL	CC	ANNO YEAR	BATFLY ALUMINIUM Ø270	S3 BATFLY CROSS Ø270	W-FLO Ø270	S3 BATFLY CROSS Ø260	W-FLO Ø260	W-FIX ØOEM	R-FIX ØOEM	BATFLY	W-FIX / W-FULL	R-FIX	Per pinza originale / For oem caliper	Per pinza originale / For oem caliper
YZ	125	1998-2000	BY4127	S34009	WL4010				YA10FI		YA10RID	YA10RI	POW13	POW04
YZ	125	2001	BY4127	S34009	WL4010			SZ01FID			YA10RID	YA10RI	POW13	POW04
YZ	125	2002	BY4127	S34009	WL4010			SZ01FID		BY4506	YA52RID / WF4507		POW13	POW04
YZ	125	2003-2007	BY4127	S34009	WL4010			SZ01FID		BY4506	YA52RID / WF4507		POW13	POW04
YZ	125	2008-2012	BY4127	S34009	WL4010			SZ01FID		BY4506	YA52RID / WF4507		POW106	POW78
YZ	125	2013-2015	BY4127	S34009	WL4010			SZ01FID		BY4506	YA52RID / WF4507		POW106	
WR R	200	1992-1995									YA01RID	YA01RI		
TT	225	1986-1987												
TT R	225	1999-2004												
TT R	230	2005-2008												
TT	250	2000									YA24RID	YA24RI		
TT R	250	1993									YA01RID	YA01RI		
TT S	250	1987-1989												
WR	250	1990-1991									YA01RID	YA01RI		
WR	250	1992-1997							YA10FI		YA01RID	YA01RI		
WR	250	1998-2000	BY4127	S34009	WL4010				YA10FI		YA10RID	YA10RI	POW13	POW04
WR	250	2001	BY4127	S34009	WL4010			SZ01FID			YA10RID	YA10RI	POW13	POW04
WR	250	2002						SZ01FID		BY4506	YA52RID / WF4507			
WR	250	2003-2007	BY4127	S34009	WL4010			SZ01FID		BY4506	YA52RID / WF4507		POW13	POW04
WR F	250	2001	BY4127	S34009	WL4010			SZ01FID			YA10RID	YA10RI	POW13	POW04
WR F	250	2002	BY4127	S34009	WL4010			SZ01FID		BY4506	YA52RID / WF4507		POW13	POW04
WR F	250	2003-2013	BY4127	S34009	WL4010			SZ01FID		BY4506	YA52RID / WF4507		POW13	POW04
WR R	250	2008-2013												
YZ	250	1985-1987						YA06FID	YA06FI					
YZ	250	1988						YA06FID	YA06FI		YA01RID	YA01RI		
YZ	250	1989						YA06FID	YA06FI		YA01RID	YA01RI		
YZ	250	1990-1997									YA01RID	YA01RI		
YZ	250	1998-2000	BY4127	S34009	WL4010				YA10FI		YA10RID	YA10RI	POW13	POW04
YZ	250	2001	BY4127	S34009	WL4010			SZ01FID			YA10RID	YA10RI	POW13	POW04
YZ	250	2002	BY4127	S34009	WL4010			SZ01FID		BY4506	YA52RID / WF4507		POW13	POW04
YZ	250	2003-2007	BY4127	S34009	WL4010			SZ01FID		BY4506	YA52RID / WF4507		POW13	POW04
YZ	250	2008	BY4127	S34009	WL4010			SZ01FID		BY4506	YA52RID / WF4507		POW106	POW78
YZ	250	2009-2014	BY4127	S34009	WL4010			SZ01FID		BY4506	YA52RID / WF4507		POW106	POW78
YZ F	250	2001	BY4127	S34009	WL4010			SZ01FID			YA10RID	YA10RI	POW13	POW04
YZ F	250	2002	BY4127	S34009	WL4010			SZ01FID		BY4506	YA52RID / WF4507		POW13	POW04
YZ F	250	2003-2006	BY4127	S34009	WL4010			SZ01FID		BY4506	YA52RID / WF4507		POW13	POW04
YZ F	250	2007-2015	BY4127	S34009	WL4010			SZ01FID		BY4506	YA52RID / WF4507		POW106	POW78
TT (Rear Drum Model)	350	1986-1995						YA06FID	YA06FI					
YZ	360	1989						YA06FID	YA06FI		YA01RID	YA01RI		
YZ RALLY	360	1990-1993									YA01RID	YA01RI		
WR F	400	1998	BY4127	S34009	WL4010				YA10FI		YA01RID	YA01RI	POW13	POW04
WR F	400	1999-2000	BY4127	S34009	WL4010				YA10FI		YA01RID	YA01RI	POW13	POW04
YZ F	400	1998	BY4127	S34009	WL4010				YA10FI		YA01RID	YA01RI	POW13	POW04
YZ F	400	1999-2000	BY4127	S34009	WL4010				YA10FI		YA01RID	YA01RI	POW13	POW04
WR F	426	2001	BY4127	S34009	WL4010			SZ01FID			YA10RID	YA10RI	POW13	POW04
WR F	426	2002	BY4127	S34009	WL4010			SZ01FID		BY4506	YA52RID / WF4507		POW13	POW04
YZ F	426	2000	BY4127	S34009	WL4010				YA10FI		YA10RID	YA10RI	POW13	POW04
YZ F	426	2001	BY4127	S34009	WL4010			SZ01FID			YA10RID	YA10RI	POW13	POW04
YZ F	426	2002	BY4127	S34009	WL4010			SZ01FID		BY4506	YA52RID / WF4507		POW13	POW04
WR F	450	2003-2014	BY4127	S34009	WL4010			SZ01FID		BY4506	YA52RID / WF4507		POW13	POW04
YZ F	450	2003-2007	BY4127	S34009	WL4010			SZ01FID		BY4506	YA52RID / WF4507		POW13	POW04
YZ F	450	2008-2015	BY4127	S34009	WL4010			SZ01FID		BY4506	YA52RID / WF4507		POW106	POW78
YZ	490	1985-1987												
YZ	490	1988-1990												
WR Z	500	1992						YA06FID	YA06FI		YA01RID	YA01RI		
WR Z	500	1993						YA06FID	YA06FI		YA01RID	YA01RI		
WR Z	500	1994												
TT	600	1985-1986												
TT	600	1989						YA06FID	YA06FI					
TT	600	1990-1992						YA06FID	YA06FI					
TT	600	1993-2001						YA18FID			YA01RID	YA01RI		
TT R	600	1993-1995												
TT R	600	1998-2007						YA18FID			YA01RID	YA01RI		

PASTIGLIE / PADS			PASTIGLIE / PADS			KIT MAGGIORAZIONE OVERSIZE KIT		TRASFORMAZIONE MOTARD MOTARD TRASFORMATION					OFFROAD / FUORISTRADA		
								DISCO DISK	PASTIGLIE PADS			SUPPORTO PINZA BRACKET CALIPER			
ANTERIORE / FRONT			POSTERIORE / REAR			ANTERIORE FRONT	POSTERIORE REAR	ANTERIORE FRONT	ANTERIORE FRONT		POSTERIORE REAR	DISK Ø320			
CM46	CM44	SM1	CM46	CM44	SM1	OKI	OKI	SK2	CM66	CM55	SM1	Per pinza originale For oem caliper	MODELLO MODEL	CC	ANNO YEAR
772CM46	772CM44	772SM1	701CM46	701CM44	701SM1	OKBY22 / OKS306 / OKWL07		WK055L			701SM1	POW80	YZ	125	1998-2000
772CM46	772CM44	772SM1	701CM46	701CM44	701SM1	OKBY22 / OKS306 / OKWL07		WK055L			701SM1	POW80	YZ	125	2001
772CM46	772CM44	772SM1	701CM46	701CM44	701SM1	OKBY22 / OKS306 / OKWL07		WK055L			701SM1	POW80	YZ	125	2002
772CM46	772CM44	772SM1	890CM46	890CM44	890SM1	OKBY22 / OKS306 / OKWL07		WK055L			890SM1	POW80	YZ	125	2003-2007
929CM46	929CM44		890CM46	890CM44	890SM1	OKBY23 / OKS307 / OKWL08		WK055L			890SM1		YZ	125	2008-2012
929CM46	929CM44		890CM46	890CM44	890SM1	OKBY23 / OKS307 / OKWL08		WK055L			890SM1		YZ	125	2013-2015
	696CM44	696SM1		722CM44	722SM1						722SM1		WR R	200	1992-1995
		685SM1											TT	225	1986-1987
		685SM1											TT R	225	1999-2004
	696CM44	696SM1											TT R	230	2005-2008
													TT	250	2000
	696CM44	696SM1		722CM44	722SM1						722SM1		TT R	250	1993
		687SM1											TT S	250	1987-1989
	696CM44	696SM1		722CM44	722SM1						722SM1		WR	250	1990-1991
	696CM44	696SM1		722CM44	722SM1						722SM1		WR	250	1992-1997
772CM46	772CM44	772SM1	701CM46	701CM44	701SM1	OKBY22 / OKS306 / OKWL07		WK055L			701SM1	POW80	WR	250	1998-2000
772CM46	772CM44	772SM1	701CM46	701CM44	701SM1	OKBY22 / OKS306 / OKWL07		WK055L			701SM1	POW80	WR	250	2001
													WR	250	2002
772CM46	772CM44	772SM1	890CM46	890CM44	890SM1	OKBY22 / OKS306 / OKWL07		WK055L			890SM1	POW80	WR	250	2003-2007
772CM46	772CM44	772SM1	701CM46	701CM44	701SM1	OKBY22 / OKS306		WK055L			701SM1	POW80	WR F	250	2001
772CM46	772CM44	772SM1	701CM46	701CM44	701SM1	OKBY22 / OKS306		WK055L			701SM1	POW80	WR F	250	2002
772CM46	772CM44	772SM1	890CM46	890CM44	890SM1	OKBY22 / OKS306 / OKWL07		WK055L			890SM1	POW80	WR F	250	2003-2013
772CM46	772CM44	772SM1	890CM46	890CM44	890SM1						890SM1		WR R	250	2008-2013
		687SM1											YZ	250	1985-1987
		687SM1			685SM1						685SM1		YZ	250	1988
	696CM44	696SM1	686CM46	686CM44	686SM1						686SM1		YZ	250	1989
	696CM44	696SM1		722CM44	722SM1						722SM1		YZ	250	1990-1997
772CM46	772CM44	772SM1	701CM46	701CM44	701SM1	OKBY22 / OKS306 / OKWL07		WK055L			701SM1	POW80	YZ	250	1998-2000
772CM46	772CM44	772SM1	701CM46	701CM44	701SM1	OKBY22 / OKS306 / OKWL07		WK055L			701SM1	POW80	YZ	250	2001
772CM46	772CM44	772SM1	701CM46	701CM44	701SM1	OKBY22 / OKS306 / OKWL07		WK055L			701SM1	POW80	YZ	250	2002
772CM46	772CM44	772SM1	701CM46	701CM44	701SM1	OKBY22 / OKS306		WK055L			890SM1	POW80	YZ	250	2003-2007
929CM46	929CM44		890CM46	890CM44	890SM1	OKBY23 / OKS307 / OKWL08		WK055L			890SM1		YZ	250	2008
929CM46	929CM44		890CM46	890CM44	890SM1	OKBY17 / OKBY23 / OKS307 / OKWL08		WK055L			890SM1		YZ	250	2009-2014
772CM46	772CM44	772SM1	701CM46	701CM44	701SM1	OKBY22 / OKS306 / OKWL07		WK055L			701SM1	POW80	YZ F	250	2001
772CM46	772CM44	772SM1	701CM46	701CM44	701SM1	OKBY22 / OKS306 / OKWL07		WK055L			701SM1	POW80	YZ F	250	2002
772CM46	772CM44	772SM1	890CM46	890CM44	890SM1	OKBY22 / OKS306 / OKWL07		WK055L			890SM1	POW80	YZ F	250	2003-2006
929CM46	929CM44		890CM46	890CM44	890SM1	OKBY17 / OKBY23 / OKS307 / OKWL08		WK055L			890SM1		YZ F	250	2007-2015
		687SM1											TT (Rear Drum Model)	350	1986-1995
	696CM44	696SM1	686CM46	686CM44	686SM1						686SM1		YZ	360	1989
	696CM44	696SM1		722CM44	722SM1						722SM1		YZ RALLY	360	1990-1993
772CM46	772CM44	772SM1		722CM44	722SM1	OKBY22 / OKS306 / OKWL07		WK055L			722SM1	POW80	WR F	400	1998
772CM46	772CM44	772SM1	701CM46	701CM44	701SM1	OKBY22 / OKS306 / OKWL07		WK055L			701SM1	POW80	WR F	400	1999-2000
772CM46	772CM44	772SM1		722CM44	722SM1	OKBY22 / OKS306 / OKWL07		WK055L			722SM1	POW80	YZ F	400	1998
772CM46	772CM44	772SM1	701CM46	701CM44	701SM1	OKBY22 / OKS306 / OKWL07		WK055L			701SM1	POW80	YZ F	400	1999-2000
772CM46	772CM44	772SM1	701CM46	701CM44	701SM1	OKBY22 / OKS306 / OKWL07		WK055L			701SM1	POW80	WR F	426	2001
772CM46	772CM44	772SM1	701CM46	701CM44	701SM1	OKBY22 / OKS306 / OKWL07		WK055L			701SM1	POW80	WR F	426	2002
772CM46	772CM44	772SM1	701CM46	701CM44	701SM1	OKBY22 / OKS306 / OKWL07		WK055L			701SM1	POW80	YZ F	426	2000
772CM46	772CM44	772SM1	701CM46	701CM44	701SM1	OKBY22 / OKS306 / OKWL07		WK055L			701SM1	POW80	YZ F	426	2001
772CM46	772CM44	772SM1	701CM46	701CM44	701SM1	OKBY22 / OKS306 / OKWL07		WK055L			701SM1	POW80	YZ F	426	2002
772CM46	772CM44	772SM1	890CM46	890CM44	890SM1	OKBY22 / OKS306 / OKWL07		WK055L			890SM1	POW80	WR F	450	2003-2014
772CM46	772CM44	772SM1	890CM46	890CM44	890SM1	OKBY22 / OKS306 / OKWL07		WK055L			890SM1	POW80	YZ F	450	2003-2007
929CM46	929CM44		890CM46	890CM44	890SM1	OKBY17 / OKBY23 / OKS307 / OKWL08		WK055L			890SM1		YZ F	450	2008-2015
		687SM1											YZ	490	1985-1987
		687SM1			685SM1						685SM1		YZ	490	1988-1990
	696CM44	696SM1		722CM44	722SM1						722SM1		WR Z	500	1992
		696SM1		722CM44	722SM1						722SM1		WR Z	500	1993
	696CM44												WR Z	500	1994
		685SM1											TT	600	1985-1986
		683SM1											TT	600	1989
		687SM1											TT	600	1990-1992
746CM46	746CM44	746SM1	773CM46	773CM44	773SM1			WK055L		746CM55	773SM1		TT	600	1993-2001
746CM46	746CM44	746SM1		722CM44	722SM1					746CM55	722SM1		TT R	600	1993-1995
746CM46	746CM44	746SM1	773CM46	773CM44	773SM1			WK055L		746CM55	773SM1		TT R	600	1998-2007

* articolo in esaurimento / to be discontinued

SCOOTER																				SCOOTER
			DISCHI / DISKS									PASTIGLIE / PADS					LEVE / LEVERS			
			ANTERIORE / FRONT					POSTERIORE / REAR				ANTERIORE / FRONT			POSTERIORE / REAR		ANTERIORE / FRONT			
MODELLO / MODEL	CC	ANNO / YEAR	W-FLO	R-FLO	S3	W-FIX	R-FIX	W-FLO	S3	W-FIX	R-FIX	CM55	P30	SM1	P30	SM1	LE	MODELLO / MODEL	CC	ANNO / YEAR
AEON																		**AEON**		
ELITE	125	2012-2013												795SM1		669SM1		ELITE	125	2012-2013
MY	125	2012-2013												795SM1		669SM1		MY	125	2012-2013
URBAN	125	2011												795SM1		702SM1		URBAN	125	2011
URBAN	125	2012-2013												795SM1		669SM1		URBAN	125	2012-2013
ELITE i	200	2011												795SM1		702SM1		ELITE i	200	2011
ELITE i	350	2012-2013												795SM1		696SM1		ELITE i	350	2012-2013
URBAN i	350	2011												795SM1		702SM1		URBAN i	350	2011
URBAN i	350	2012-2013												795SM1		669SM1		URBAN i	350	2012-2013
AGRATI G.																		**AGRATI G.**		
BIG-WHEELS	50	1991-1994				YA12FID	YA12FI							744SM1		743SM1		BIG-WHEELS	50	1991-1994
BIP-RACING	50	1994				YA12FID	YA12FI							744SM1				BIP-RACING	50	1994
CICLONE LC SM	50	1986-1988												671SM1				CICLONE LC SM	50	1986-1988
FORMUNO RAID	50	1989-1994												671SM1				FORMUNO RAID	50	1989-1994
GRINTA	50	1995				YA12FID	YA12FI							744SM1				GRINTA	50	1995
PONY SR	50	1992-1995				YA12FID	YA12FI							744SM1				PONY SR	50	1992-1995
QUEENIE	50	1995				YA12FID	YA12FI							744SM1				QUEENIE	50	1995
SAHEL	50	1988-1991												694SM1		671SM1		SAHEL	50	1988-1991
SUPER CICLONE AC	50	1991-1994												671SM1				SUPER CICLONE AC	50	1991-1994
URKA AC-LC	50	1989-1994												671SM1				URKA AC-LC	50	1989-1994
APRILIA																		**APRILIA**		
AMICO SPORT LX	50	1992				YA12FID	YA12FI							761SM1				AMICO SPORT LX	50	1992
AREA 51	50	1998-2002								AP11FID	AP11FI			761SM1		761SM1		AREA 51	50	1998-2002
AREA 51 SBK	50	2000-2002								AP11FID	AP11FI			761SM1		761SM1		AREA 51 SBK	50	2000-2002
GULLIVER	50	1997-1999				AP11FID	AP11FI							761SM1				GULLIVER	50	1997-1999
HABANA	50	1998-2002				AP11FID	AP11FI							761SM1				HABANA	50	1998-2002
RALLY AC	50	1995-2000				AP11FID	AP11FI							761SM1				RALLY AC	50	1995-2000
RALLY LC	50	1997				AP11FID	AP11FI			AP11FID	AP11FI			761SM1		761SM1		RALLY LC	50	1997
SCARABEO	50	1994-1997					RF8511							761SM1				SCARABEO	50	1994-1997
SCARABEO	50	1998-2005								AP11FID	AP11FI			761SM1				SCARABEO	50	1998-2005
SCARABEO 4t	50	2002-2009								AP11FID	AP11FI			761SM1		840SM1		SCARABEO 4t	50	2002-2009
SCARABEO DE-LUX	50	1998								AP11FID	AP11FI			761SM1		761SM1		SCARABEO DE-LUX	50	1998
SCARABEO DITECH	50	2001-2004								AP11FID	AP11FI			761SM1		840SM1		SCARABEO DITECH	50	2001-2004
SONIC (Rear Drum Model)	50	1998-2008				YA12FID	YA12FI							761SM1				SONIC (Rear Drum Model)	50	1998-2008
SONIC GP (Rear Drum Model)	50	1998-2008				YA12FID	YA12FI							761SM1				SONIC GP (Rear Drum Model)	50	1998-2008
SR AC LC	50	1994-2000				AP11FID	AP11FI							778SM1				SR AC LC	50	1994-2000
SR DITECH	50	2001-2006				AP11FID	AP11FI			AP11FID	AP11FI			778SM1		840SM1		SR DITECH	50	2001-2006
SR R FACTORY	50	2005-2006				AP11FID	AP11FI			AP21RID	AP21RI			778SM1		840SM1		SR R FACTORY	50	2005-2006
SR R FACTORY	50	2007-2014								AP21RID	AP21RI					840SM1		SR R FACTORY	50	2007-2014
SR RACING	50	2000												761SM1		840SM1		SR RACING	50	2000
SR STEALTH LC	50	1996-2000				AP11FID	AP11FI			AP11FID	AP11FI			761SM1		761SM1		SR STEALTH LC	50	1996-2000
SR STREET	50	2003-2012				AP11FID	AP11FI			AP11FID	AP11FI			761SM1		840SM1		SR STREET	50	2003-2012
SR WWW	50	1997				AP11FID	AP11FI							778SM1				SR WWW	50	1997
SCARABEO	100	2000-2001												842SM1				SCARABEO	100	2000-2001
SCARABEO 4t	100	2001-2009												842SM1				SCARABEO 4t	100	2001-2009
ATLANTIC	125	2003-2011					RF8126			AP21RID	AP21RI			853SM1		840SM1		ATLANTIC	125	2003-2011
HABANA	125	2000												842SM1				HABANA	125	2000
LEONARDO	125	1996				AP16FID	AP16FI			AP11FID	AP11FI			761SM1		761SM1		LEONARDO	125	1996
LEONARDO	125	1997-1998				AP16FID	AP16FI			AP11FID	AP11FI			778SM1		761SM1		LEONARDO	125	1997-1998
LEONARDO (Grimeca cal.)	125	1999-2004				AP16FID	AP16FI			AP11FID	AP11FI			684SM1		842SM1		LEONARDO (Grimeca cal.)	125	1999-2004
LEONARDO ST	125	1999				AP16FID	AP16FI			AP11FID	AP11FI			842SM1		842SM1		LEONARDO ST	125	1999
MOJITO	125	2003-2008				AP11FID	AP11FI							842SM1				MOJITO	125	2003-2008
MOJITO RETRO'	125	1999-2001				AP11FID	AP11FI							842SM1				MOJITO RETRO'	125	1999-2001
SCARABEO	125	1999-2003				AP10FID	AP10FI			AP16FID	AP16FI			684SM1		840SM1		SCARABEO	125	1999-2003
SCARABEO	125	2004-2007				AP10FID	AP10FI				RF8126			853SM1		840SM1		SCARABEO	125	2004-2007
SCARABEO	125	2008-2010				AP10FID	AP10FI							853SM1		840SM1		SCARABEO	125	2008-2010
SCARABEO GT	125	1999-2003				AP10FID	AP10FI			AP16FID	AP16FI			684SM1		840SM1		SCARABEO GT	125	1999-2003
SPORT CITY CUBE	125	2008-2010												684SM1		840SM1		SPORT CITY CUBE	125	2008-2010
SPORTCITY	125	2004-2007				AP10FID	AP10FI			AP16FID	AP16FI			684SM1		840SM1		SPORTCITY	125	2004-2007
SR	125	1999-2003				AP11FID	AP11FI							842SM1				SR	125	1999-2003
SR MAX	125	2011-2014					RF8139				RF8518			888SM1		888SM1		SR MAX	125	2011-2014
SR MOTARD (Rear Drum Model)	125	2012-2014												888SM1				SR MOTARD (Rear Drum Model)	125	2012-2014
LEONARDO	150	1997-1998				AP16FID	AP16FI			AP11FID	AP11FI			612SM1		761SM1		LEONARDO	150	1997-1998
LEONARDO (Grimeca cal.)	150	1999												684SM1		842SM1		LEONARDO (Grimeca cal.)	150	1999
LEONARDO ST	150	1999				AP16FID	AP16FI			AP11FID	AP11FI			842SM1		842SM1		LEONARDO ST	150	1999
SCARABEO	150	1999-2002				AP10FID	AP10FI			AP16FID	AP16FI			684SM1		840SM1		SCARABEO	150	1999-2002

* articolo in esaurimento / to be discontinued

SCOOTER

			DISCHI / DISKS									PASTIGLIE / PADS					LEVE / LEVERS	SCOOTER		
			ANTERIORE / FRONT					POSTERIORE / REAR				ANTERIORE / FRONT			POSTERIORE / REAR		ANTERIORE / FRONT			
MODELLO / MODEL	CC	ANNO / YEAR	W-FLO	R-FLO	S3	W-FIX	R-FIX	W-FLO	S3	W-FIX	R-FIX	CM55	P30	SM1	P30	SM1	LE	MODELLO / MODEL	CC	ANNO / YEAR
SR	150	1999-2003				AP11FID	AP11FI							842SM1				SR	150	1999-2003
ATLANTIC	200	2003-2004					RF8126			AP21RID	AP21RI			853SM1		840SM1		ATLANTIC	200	2003-2004
SCARABEO GT	200	2001-2004				AP10FID	AP10FI			AP16FID	AP16FI			684SM1		840SM1		SCARABEO GT	200	2001-2004
SCARABEO IE	200	2012												853SM1		840SM1		SCARABEO IE	200	2012
SPORTCITY	200	2005-2007				AP10FID	AP10FI			AP16FID	AP16FI			684SM1		840SM1		SPORTCITY	200	2005-2007
ATLANTIC	250	2005-2006					RF8126			AP21RID	AP21RI			853SM1		840SM1		ATLANTIC	250	2005-2006
LEONARDO	250	1999-2004				AP16FID	AP16FI				RF8511			684SM1		840SM1		LEONARDO	250	1999-2004
LEONARDO (Grimeca cal.)	250	1999-2004				AP16FID	AP16FI				RF8511			684SM1		840SM1		LEONARDO (Grimeca cal.)	250	1999-2004
SCARABEO	250	2005-2008				AP10FID	AP10FI							853SM1		840SM1		SCARABEO	250	2005-2008
SCARABEO LIGHT	250	2006-2008				AP10FID	AP10FI							853SM1		840SM1		SCARABEO LIGHT	250	2006-2008
SPORT CITY CUBE	250	2008-2010												684SM1		840SM1		SPORT CITY CUBE	250	2008-2010
SPORTCITY	250	2006-2007				AP10FID	AP10FI			AP16FID	AP16FI			684SM1		840SM1		SPORTCITY	250	2006-2007
ATLANTIC	300	2010-2011					RF8126			AP21RID	AP21RI			853SM1		840SM1		ATLANTIC	300	2010-2011
LEONARDO (Grimeca cal.)	300	2005-2006				AP16FID	AP16FI				RF8511			684SM1		840SM1		LEONARDO (Grimeca cal.)	300	2005-2006
LEONARDO ST	300	2005-2006				AP16FID	AP16FI				RF8511							LEONARDO ST	300	2005-2006
SCARABEO	300	2009				AP10FID	AP10FI							853SM1		840SM1		SCARABEO	300	2009
SCARABEO LIGHT	300	2009-2010				AP10FID	AP10FI							853SM1		840SM1		SCARABEO LIGHT	300	2009-2010
SR MAX	300	2011-2014					RF8139				RF8518			888SM1		888SM1		SR MAX	300	2011-2014
ATLANTIC SPRINT	400	2005-2008												853SM1		840SM1		ATLANTIC SPRINT	400	2005-2008
SCARABEO URBAN	400	2006-2007				AP10FID	AP10FI											SCARABEO URBAN	400	2006-2007
ATLANTIC	500	2002-2005			S38001	AP10FID	AP10FI				RF8511			684SM1		840SM1		ATLANTIC	500	2002-2005
ATLANTIC SPRINT	500	2005-2008								AP21RID	AP21RI			853SM1		840SM1		ATLANTIC SPRINT	500	2005-2008
SCARABEO	500	2003-2005				AP10FID	AP10FI				RF8511			684SM1		840SM1		SCARABEO	500	2003-2005
SCARABEO URBAN	500	2006-2007				AP10FID	AP10FI											SCARABEO URBAN	500	2006-2007
SRV	850	2012-2014	WH8101L / WH8101R	RH8101L / RH8101R								746CM55		746SM1		888SM1		SRV	850	2012-2014
SRV ABS ATC	850	2012-2014	WH8101L / WH8101R	RH8101L / RH8101R								746CM55		746SM1		888SM1		SRV ABS ATC	850	2012-2014
BENELLI																		**BENELLI**		
491 GT	50	1997-2000				PE01FID	PE01FI							761SM1				491 GT	50	1997-2000
491 K2 AIR	50	1998-2000				PE01FID	PE01FI							761SM1		761SM1		491 K2 AIR	50	1998-2000
491 RACING	50	1999				PE01FID	PE01FI			PE01FID	PE01FI			761SM1		761SM1		491 RACING	50	1999
491 SPORT	50	1998				PE01FID	PE01FI							761SM1				491 SPORT	50	1998
K2 LC	50	1999				PE01FID	PE01FI							761SM1		761SM1		K2 LC	50	1999
PEPE	50	1999-2004												761SM1				PEPE	50	1999-2004
K2	100	1999				PE01FID	PE01FI							761SM1				K2	100	1999
VELVET	125	1999-2004					RF8133							761SM1		612SM1		VELVET	125	1999-2004
ADIVA	150	2000				GL06FID	GL06FI							778SM1		871SM1		ADIVA	150	2000
VELVET	150	1999-2004					RF8133							761SM1		612SM1		VELVET	150	1999-2004
CAFFE NERO	250	2008												862SM1				CAFFE NERO	250	2008
VELVET	250	1999-2003					RF8126			PE01FID	PE01FI			770SM1		840SM1		VELVET	250	1999-2003
VELVET	400	2003-2004					RF8126											VELVET	400	2003-2004
VELVET DUSK	400	2003-2004												770SM1		840SM1		VELVET DUSK	400	2003-2004
BETA																		**BETA**		
ARK	50	1997				AP11FID	AP11FI							761SM1				ARK	50	1997
ARK LC	50	1999				AP11FID	AP11FI			AP11FID	AP11FI			761SM1		761SM1		ARK LC	50	1999
CHRONO 13	50	1994-1999				AP11FID	AP11FI							761SM1				CHRONO 13	50	1994-1999
EIKON	50	1999-2006												621SM1		621SM1		EIKON	50	1999-2006
FOUR AE-S	50	1987-1992												671SM1				FOUR AE-S	50	1987-1992
FOUR TWIN	50	1988-1992												671SM1				FOUR TWIN	50	1988-1992
QUADRA (Rear Drum Model)	50	1997-2001				PE01FID	PE01FI							612SM1				QUADRA (Rear Drum Model)	50	1997-2001
TEMPO	50	1997-1998												612SM1				TEMPO	50	1997-1998
TEMPO 13	50	1995-1996				AP11FID	AP11FI							694SM1				TEMPO 13	50	1995-1996
TEMPO 16	50	1994-1996												694SM1				TEMPO 16	50	1994-1996
EIKON	125	1999-2003				AP16FID	AP16FI							761SM1		761SM1		EIKON	125	1999-2003
EIKON	150	1999												621SM1		621SM1		EIKON	150	1999
EIKON	250	1999												621SM1		621SM1		EIKON	250	1999
BMW																		**BMW**		
C1 scooter	125	2000										780CM55		780SM1		773SM1		C1 scooter	125	2000
C1 scooter	200	2002										780CM55		780SM1		773SM1		C1 scooter	200	2002
C 600 SPORT	600	2012-2014				WF8113	RF8140			WF8113	RF8140	716CM55	P30716	716SM1	P30716	716SM1		C 600 SPORT	600	2012-2014
C 650 GT	650	2012-2014				WF8113	RF8140			WF8113	RF8140	716CM55	P30716	716SM1	P30716	716SM1		C 650 GT	650	2012-2014
CAGIVA																		**CAGIVA**		
CITY	50	1992-1994				HO17FID	HO17FI							757SM1				CITY	50	1992-1994
CUCCIOLO	50	1998												612SM1				CUCCIOLO	50	1998
CUCCIOLO	125	1999												779SM1				CUCCIOLO	125	1999
PASSING	125	1994				HO17FID	HO17FI							796SM1				PASSING	125	1994

* articolo in esaurimento / to be discontinued

SCOOTER			DISCHI / DISKS									PASTIGLIE / PADS					LEVE / LEVERS	SCOOTER		
			ANTERIORE / FRONT					POSTERIORE / REAR				ANTERIORE / FRONT			POSTERIORE / REAR		ANTERIORE / FRONT			
MODELLO / MODEL	CC	ANNO / YEAR	W-FLO	R-FLO	S3	W-FIX	R-FIX	W-FLO	S3	W-FIX	R-FIX	CM55	P30	SM1	P30	SM1	LE	MODELLO / MODEL	CC	ANNO / YEAR
DAELIM																		**DAELIM**		
CORDI / SE R	50	2005-2008												703SM1				CORDI / SE R	50	2005-2008
DELFINO	50	1999-2001												703SM1				DELFINO	50	1999-2001
E-FIVE	50	2003												703SM1				E-FIVE	50	2003
HISTORY	50	2001												703SM1				HISTORY	50	2001
MESSAGE	50	1998												757SM1				MESSAGE	50	1998
TAPO	50	1999												703SM1				TAPO	50	1999
VIVO	50	1999												703SM1				VIVO	50	1999
125 II	125	1997												703SM1				125 II	125	1997
ADVANCE	125	1995-1996											P30830	830SM1		703SM1		ADVANCE	125	1995-1996
DAYSTAR (Rear Drum Model)	125	2000-2011												720SM1				DAYSTAR (Rear Drum Model)	125	2000-2011
EVOLUTION	125	1995-2000												703SM1				EVOLUTION	125	1995-2000
EVOLUTION	125	2001-2004												720SM1				EVOLUTION	125	2001-2004
F1	125	2007											P30830	830SM1		703SM1		F1	125	2007
HISTORY	125	2001												703SM1		703SM1		HISTORY	125	2001
MAGNA	125	1997												720SM1				MAGNA	125	1997
MESSAGE II	125	2000												703SM1				MESSAGE II	125	2000
OTELLO	125	1999												703SM1				OTELLO	125	1999
OTELLO	125	2007											P30830	830SM1		703SM1		OTELLO	125	2007
OTELLO DLX	125	2001-2006												703SM1		703SM1		OTELLO DLX	125	2001-2006
ROADWIN	125	2004-2012												720SM1				ROADWIN	125	2004-2012
ROCKET	125	1999												720SM1				ROCKET	125	1999
DERBI																		**DERBI**		
ATLANTIS	50	1999-2002												621SM1				ATLANTIS	50	1999-2002
ATLANTIS 4t	50	2004-2006												621SM1				ATLANTIS 4t	50	2004-2006
ATLANTIS BULLET	50	2003-2005												621SM1				ATLANTIS BULLET	50	2003-2005
ATLANTIS CITY	50	2003-2006												621SM1				ATLANTIS CITY	50	2003-2006
ATLANTIS H²O	50	2001												621SM1				ATLANTIS H²O	50	2001
ATLANTIS RED BULLET	50	2003												621SM1				ATLANTIS RED BULLET	50	2003
ATLANTIS TWO CHIC	50	2005												621SM1				ATLANTIS TWO CHIC	50	2005
AVENTURA	50	1996												621SM1				AVENTURA	50	1996
BOULEVARD 2T (Rear Drum Model)	50	2009-2012												888SM1				BOULEVARD 2T (Rear Drum Model)	50	2009-2012
BOULEVARD 4T (Rear Drum Model)	50	2009												888SM1				BOULEVARD 4T (Rear Drum Model)	50	2009
EASY	50	1996												612SM1				EASY	50	1996
FENIX	50	1994												621SM1		621SM1		FENIX	50	1994
FURAX	50	1996												621SM1		621SM1		FURAX	50	1996
GP1	50	2001-2004												621SM1		621SM1		GP1	50	2001-2004
GP1	50	2005														621SM1		GP1	50	2005
GP1 EURO2	50	2005												828SM1		621SM1		GP1 EURO2	50	2005
GP1 OPEN	50	2006-2011												770SM1		621SM1		GP1 OPEN	50	2006-2011
GP1 RACE	50	2005-2007												828SM1		621SM1		GP1 RACE	50	2005-2007
HUNTER	50	1997-1999												621SM1				HUNTER	50	1997-1999
MANHATTAN	50	1999												621SM1				MANHATTAN	50	1999
PREDATOR LC	50	1999-2003												621SM1		621SM1		PREDATOR LC	50	1999-2003
PREDATOR O2	50	1998-2001												621SM1		621SM1		PREDATOR O2	50	1998-2001
RED BULLET	50	2004-2005												621SM1				RED BULLET	50	2004-2005
SAVANNAH	50	1991												621SM1				SAVANNAH	50	1991
SONAR	50	2009-2011												808SM1				SONAR	50	2009-2011
ST PADDOCK	50	1996-1999												621SM1				ST PADDOCK	50	1996-1999
STINGER	50	1996												621SM1				STINGER	50	1996
VAMOS R (A.J.P. cal.)	50	1995-1999												621SM1				VAMOS R (A.J.P. cal.)	50	1995-1999
VAMOS R (Brembo cal.)	50	1995												761SM1				VAMOS R (Brembo cal.)	50	1995
VARIANT SPORT	50	2012												888SM1				VARIANT SPORT	50	2012
ATLANTIS 2T	100	2000-2001												621SM1				ATLANTIS 2T	100	2000-2001
ATLANTIS 4t	100	2004-2006												621SM1				ATLANTIS 4t	100	2004-2006
ATMOSPHERE	125	1999												741SM1				ATMOSPHERE	125	1999
BOULEVARD (Rear Drum Model)	125	2004-2007												878SM1				BOULEVARD (Rear Drum Model)	125	2004-2007
BOULEVARD (Rear Drum Model)	125	2008-2012												888SM1				BOULEVARD (Rear Drum Model)	125	2008-2012
BOULEVARD S	125	2007												684SM1		840SM1		BOULEVARD S	125	2007
GP1	125	2005												828SM1		828SM1		GP1	125	2005
GP1 RACING LOW SEAT	125	2007-2009												828SM1		878SM1		GP1 RACING LOW SEAT	125	2007-2009
PREDATOR	125	1999												621SM1				PREDATOR	125	1999
RAMBLA	125	2008-2012												684SM1		840SM1		RAMBLA	125	2008-2012
SONAR	125	2009-2011												808SM1				SONAR	125	2009-2011

* articolo in esaurimento / to be discontinued

SCOOTER			DISCHI / DISKS									PASTIGLIE / PADS					LEVE / LEVERS	SCOOTER		
			ANTERIORE / FRONT					POSTERIORE / REAR				ANTERIORE / FRONT			POSTERIORE / REAR		ANTERIORE / FRONT			
MODELLO / MODEL	CC	ANNO / YEAR	W-FLO	R-FLO	S3	W-FIX	R-FIX	W-FLO	S3	W-FIX	R-FIX	CM55	P30	SM1	P30	SM1	LE	MODELLO / MODEL	CC	ANNO / YEAR
VARIANT SPORT	125	2012												888SM1				VARIANT SPORT	125	2012
BOULEVARD (Rear Drum Model)	150	2004-2007												878SM1				BOULEVARD (Rear Drum Model)	150	2004-2007
SONAR	150	2009-2010												808SM1				SONAR	150	2009-2010
PREDATOR	180	1999												741SM1				PREDATOR	180	1999
BOULEVARD (Rear Drum Model)	200	2005												878SM1				BOULEVARD (Rear Drum Model)	200	2005
GP1	250	2005-2007												828SM1		828SM1		GP1	250	2005-2007
GP1 RACING LOW SEAT	250	2007-2009												828SM1		878SM1		GP1 RACING LOW SEAT	250	2007-2009
RAMBLA	250	2008-2009												684SM1		840SM1		RAMBLA	250	2008-2009
RAMBLA	300	2010-2012												684SM1		840SM1		RAMBLA	300	2010-2012
FANTIC M.																		**FANTIC M.**		
GRINTA	50	1995-2000				YA12FID	YA12FI							744SM1				GRINTA	50	1995-2000
PONY SR	50	1993-2000												744SM1				PONY SR	50	1993-2000
GILERA																		**GILERA**		
BULLIT	50	1990-1996												671SM1				BULLIT	50	1990-1996
DNA (Grimeca)	50	2000-2002				GL01RID	RF8510			PI01FID	PI01FI			770SM1		808SM1		DNA (Grimeca)	50	2000-2002
DNA (Hengtong)	50	2000-2005				GL01RID	RF8510			PI01FID	PI01FI			888SM1		808SM1		DNA (Hengtong)	50	2000-2005
EASY MOVING	50	1996				YA12FID	YA12FI							761SM1				EASY MOVING	50	1996
GSM	50	2000-2003												621SM1		621SM1		GSM	50	2000-2003
ICE	50	2001-2006												761SM1				ICE	50	2001-2006
NRG	50	1994				AP11FID	AP11FI							761SM1				NRG	50	1994
RCR	50	2004-2005												621SM1		621SM1		RCR	50	2004-2005
RUNNER	50	1997-2000				GL06FID	GL06FI							761SM1				RUNNER	50	1997-2000
RUNNER DD - SP	50	1997-2004				GL06FID	GL06FI			GL06RID	GL06RI			761SM1		808SM1		RUNNER DD - SP	50	1997-2004
SMT	50	2004-2005												621SM1		621SM1		SMT	50	2004-2005
STALKER DD	50	1997-2001				AP11FID	AP11FI			GL06RID	GL06RI			761SM1		761SM1		STALKER DD	50	1997-2001
STALKER DT	50	1997-2005				AP11FID	AP11FI							761SM1				STALKER DT	50	1997-2005
STALKER DT	50	2006												702SM1				STALKER DT	50	2006
STORM	50	1994				AP11FID	AP11FI							761SM1				STORM	50	1994
DNA (Grimeca)	125	2001-2002				GL01RID	RF8510			GL01RID	RF8510			770SM1		808SM1		DNA (Grimeca)	125	2001-2002
DNA (Hengtong)	125	2001-2003				GL01RID	RF8510			GL01RID	RF8510			888SM1		808SM1		DNA (Hengtong)	125	2001-2003
NEXUS	125	2008-2009			S38009	PI04FID	PI04FI			PI03FID	PI03FI			888SM1		888SM1		NEXUS	125	2008-2009
RUNNER	125	2008				WF8106	RF8127											RUNNER	125	2008
RUNNER FX	125	1997-1999				GL06FID	GL06FI			GL01RID	RF8510			741SM1				RUNNER FX	125	1997-1999
RUNNER FX	125	2000-2005	GL07FLOWD			GL06FID	GL06FI			GL01RID	RF8510			770SM1		808SM1		RUNNER FX	125	2000-2005
RUNNER FX SP (Grimeca)	125	2002-2005	GL07FLOWD			GL06FID	GL06FI			GL01RID	RF8510			770SM1		808SM1		RUNNER FX SP (Grimeca)	125	2002-2005
RUNNER FX SP (Hengtong)	125	2002-2003				GL06FID	GL06FI			GL01RID	RF8510			888SM1		808SM1		RUNNER FX SP (Hengtong)	125	2002-2003
RUNNER FX SP scooter	125	1999-2001				GL06FID	GL06FI			GL01RID	RF8510			770SM1		808SM1		RUNNER FX SP scooter	125	1999-2001
RUNNER VXR 4t	125	2005-2007				WF8106	RF8127											RUNNER VXR 4t	125	2005-2007
RUNNER VXR 4t (Grimeca)	125	2001-2003				GL06FID	GL06FI			PI01FID	PI01FI			770SM1		871SM1		RUNNER VXR 4t (Grimeca)	125	2001-2003
RUNNER VXR 4t (Hengtong)	125	2001-2007												888SM1		871SM1		RUNNER VXR 4t (Hengtong)	125	2001-2007
DNA (Grimeca)	180	2001-2003				GL01RID	RF8510							770SM1		808SM1		DNA (Grimeca)	180	2001-2003
DNA (Hengtong)	180	2001-2003				GL01RID	RF8510			GL01RID	RF8510			888SM1		808SM1		DNA (Hengtong)	180	2001-2003
RUNNER FXR 2t	180	1997				GL06FID	GL06FI							741SM1				RUNNER FXR 2t	180	1997
RUNNER FXR 2t	180	1998-1999				GL06FID	GL06FI							770SM1				RUNNER FXR 2t	180	1998-1999
RUNNER FXR 2t (Grimeca)	180	2000-2005				GL06FID	GL06FI			GL01RID	RF8510			770SM1		808SM1		RUNNER FXR 2t (Grimeca)	180	2000-2005
RUNNER FXR 2t (Hengtong)	180	2000				GL06FID	GL06FI			GL01RID	RF8510			808SM1		808SM1		RUNNER FXR 2t (Hengtong)	180	2000
RUNNER FXR 4t (Hengtong)	180	2001				GL06FID	GL06FI											RUNNER FXR 4t (Hengtong)	180	2001
RUNNER FXR SP 2t (Grimeca)	180	1999-2005	GL07FLOWD			GL06FID	GL06FI			GL01RID	RF8510			770SM1		808SM1		RUNNER FXR SP 2t (Grimeca)	180	1999-2005
RUNNER FXR SP 2t (Hengtong)	180	2002-2003								GL06FID	GL06FI			888SM1		808SM1		RUNNER FXR SP 2t (Hengtong)	180	2002-2003
RUNNER VXR 4t (Grimeca)	180	2001-2005	GL07FLOWD			GL06FID	GL06FI							770SM1		871SM1		RUNNER VXR 4t (Grimeca)	180	2001-2005
RUNNER VXR 4t (Hengtong)	180	2001				GL06FID	GL06FI							888SM1		808SM1		RUNNER VXR 4t (Hengtong)	180	2001
HERCULES	200	2002								GL01RID	RF8510							HERCULES	200	2002
RUNNER SP	200	2001-2002								GL01RID	RF8510							RUNNER SP	200	2001-2002
RUNNER VXR 4t	200	2005				WF8106	RF8127											RUNNER VXR 4t	200	2005
RUNNER VXR 4t	200	2006				WF8106	RF8127			WF8103	RF8119			888SM1		871SM1		RUNNER VXR 4t	200	2006
RUNNER VXR 4t	200	2007-2008				WF8106	RF8127											RUNNER VXR 4t	200	2007-2008
RUNNER VXR 4t (Grimeca)	200	2002-2005				GL06FID	GL06FI			WF8103	RF8119			770SM1		871SM1		RUNNER VXR 4t (Grimeca)	200	2002-2005
RUNNER VXR 4t (Hengtong)	200	2002-2005				GL06FID	GL06FI			WF8103	RF8119			888SM1		871SM1		RUNNER VXR 4t (Hengtong)	200	2002-2005
NEXUS	250	2006-2008			S38009	PI04FID	PI04FI			PI03FID	PI03FI			888SM1		888SM1		NEXUS	250	2006-2008
NEXUS (Hengtong)	300	2008-2011			S38009	PI04FID	PI04FI			PI03FID	PI03FI			888SM1		888SM1		NEXUS (Hengtong)	300	2008-2011
FUOCO	500	2007-2014				WF8106	RF8127							808SM1		909SM1		FUOCO	500	2007-2014
NEXUS	500	2004-2011			S38009	PI04FID	PI04FI			PI03FID	PI03FI	746CM55		746SM1		828SM1		NEXUS	500	2004-2011
NEXUS i.e. SP	500	2006-2008			S38009	PI04FID	PI04FI			PI03FID	PI03FI	746CM55		746SM1		828SM1		NEXUS i.e. SP	500	2006-2008
GP 800	800	2008-2012	WH8101L / WH8101R	RH8101L / RH8101R				WH8501				746CM55		746SM1		888SM1		GP 800	800	2008-2012

* articolo in esaurimento / to be discontinued

SCOOTER			DISCHI / DISKS									PASTIGLIE / PADS					LEVE / LEVERS	SCOOTER		
			ANTERIORE / FRONT					POSTERIORE / REAR				ANTERIORE / FRONT			POSTERIORE / REAR		ANTERIORE / FRONT			
MODELLO / MODEL	CC	ANNO / YEAR	W-FLO	R-FLO	S3	W-FIX	R-FIX	W-FLO	S3	W-FIX	R-FIX	CM55	P30	SM1	P30	SM1	LE	MODELLO / MODEL	CC	ANNO / YEAR
HONDA																		**HONDA**		
BALI SJ (Rear Drum Model)	50	1993-1999				H032FID	H032FI											BALI SJ (Rear Drum Model)	50	1993-1999
DREAM	50	1997												696SM1		701SM1		DREAM	50	1997
HSC 01	50	1993				H017FID	H017FI							757SM1				HSC 01	50	1993
HSC ZR	50	1992				H017FID	H017FI											HSC ZR	50	1992
NS F- AERO	50	1988												673SM1				NS F- AERO	50	1988
NSC R (Rear Drum Model)	50	2012-2014				WF8111	RF8134							954SM1				NSC R (Rear Drum Model)	50	2012-2014
SFX	50	1995												761SM1				SFX	50	1995
SH FIFTY	50	1996					H014FI							761SM1				SH FIFTY	50	1996
SH SCOOPY	50	1996-1999					H014FI							761SM1				SH SCOOPY	50	1996-1999
SKY (Rear Drum Model)	50	1997-2003				H032FID	H032FI							761SM1				SKY (Rear Drum Model)	50	1997-2003
SR DIO	50	1990				H017FID	H017FI							757SM1				SR DIO	50	1990
SZX X 8RS	50	1998-2004					H034FI				H034RI			761SM1		774SM1		SZX X 8RS	50	1998-2004
SZX X 8RX	50	1998-2004					H034FI				H034RI			761SM1		774SM1		SZX X 8RX	50	1998-2004
VISION 14” WHEEL (Rear Drum Model)	50	2012-2014				WF8111	RF8134							954SM1				VISION 14” WHEEL (Rear Drum Model)	50	2012-2014
VISION 16” WHEEL (Rear Drum Model)	50	2012-2014				WF8111	RF8134							954SM1				VISION 16” WHEEL (Rear Drum Model)	50	2012-2014
YUPI	50	1990				H032FID	H032FI							711SM1				YUPI	50	1990
ZX DIO	50	1992				H017FID	H017FI							757SM1				ZX DIO	50	1992
BALI SJ (Rear Drum Model)	100	1996-1999				H032FID	H032FI											BALI SJ (Rear Drum Model)	100	1996-1999
SH SCOOPY (Rear Drum Model)	100	1996-2001					H014FI							761SM1				SH SCOOPY (Rear Drum Model)	100	1996-2001
NEW LEAD	107	2008				H023FID	H023FI							667SM1				NEW LEAD	107	2008
VISION 14” WHEEL (Rear Drum Model)	110	2012-2013				WF8111	RF8134							954SM1				VISION 14” WHEEL (Rear Drum Model)	110	2012-2013
VISION 16” WHEEL (Rear Drum Model)	110	2012-2013				WF8111	RF8134							954SM1				VISION 16” WHEEL (Rear Drum Model)	110	2012-2013
@ NES (Rear Drum Model)	125	2001-2006				H049FID	H049FI						P30667	667SM1				@ NES (Rear Drum Model)	125	2001-2006
CH SPACY	125	1998				H032FID	H032FI							673SM1				CH SPACY	125	1998
DYLAN	125	2002				H049FID	H049FI						P30667	667SM1				DYLAN	125	2002
INNOVA ANF	125	2003-2010												902SM1				INNOVA ANF	125	2003-2010
PANTHEON	125	1998-2002			S38005	H050FID	RF8114						P30813	813SM1				PANTHEON	125	1998-2002
PANTHEON	125	2003-2007			S38005	H050FID	RF8114			H050RID	H022RI			653SM1		711SM1		PANTHEON	125	2003-2007
PCX (Rear Drum Model)	125	2009-2013				WF8111	RF8134							954SM1				PCX (Rear Drum Model)	125	2009-2013
PSi	125	2006				H049FID	H049FI						P30667	667SM1				PSi	125	2006
SH (Rear Drum Model)	125	2001-2004				H049FID	H049FI						P30667	667SM1				SH (Rear Drum Model)	125	2001-2004
SH i	125	2009-2012				H050FID	RF8114				RF8505		P30910	910SM1	P30908	908SM1		SH i	125	2009-2012
SH i	125	2013				H050FID	RF8114				RF8505		P30716	716SM1	P30908	908SM1		SH i	125	2013
SH i	125	2014				H050FID	RF8114				RF8505			720SM1	P30908	908SM1		SH i	125	2014
SH i (Rear Drum Model)	125	2005-2008				H049FID	H049FI						P30667	667SM1				SH i (Rear Drum Model)	125	2005-2008
SH MODE (Rear Drum Model)	125	2014				WF8111	RF8134							954SM1				SH MODE (Rear Drum Model)	125	2014
SH SPORTY	125	2011				H050FID	RF8114				RF8505		P30910	910SM1	P30908	908SM1		SH SPORTY	125	2011
SILVER WING	125	2007-2011				H050FID	RF8114						P30910	910SM1	P30908	908SM1		SILVER WING	125	2007-2011
SILVER WING ABS	125	2007-2011				H050FID	RF8114						P30910	910SM1	P30908	908SM1		SILVER WING ABS	125	2007-2011
@ NES (Rear Drum Model)	150	2001-2006				H049FID	H049FI						P30667	667SM1				@ NES (Rear Drum Model)	150	2001-2006
DYLAN	150	2002				H049FID	H049FI						P30667	667SM1				DYLAN	150	2002
PANTHEON	150	1998-2002			S38005	H050FID	RF8114						P30813	813SM1				PANTHEON	150	1998-2002
PANTHEON	150	2003-2007			S38005	H050FID	RF8114			H050RID	H022RI			653SM1		711SM1		PANTHEON	150	2003-2007
PCX (Rear Drum Model)	150	2013				WF8111	RF8134							954SM1				PCX (Rear Drum Model)	150	2013
PSi	150	2006				H049FID	H049FI						P30667	667SM1				PSi	150	2006
SH (Rear Drum Model)	150	2001-2004				H049FID	H049FI						P30667	667SM1				SH (Rear Drum Model)	150	2001-2004
SH i	150	2009-2012				H050FID	RF8114				RF8505		P30910	910SM1	P30908	908SM1		SH i	150	2009-2012
SH i	150	2013				H050FID	RF8114				RF8505		P30716	716SM1	P30908	908SM1		SH i	150	2013
SH i	150	2014				H050FID	RF8114				RF8505			720SM1	P30908	908SM1		SH i	150	2014
SH i (Rear Drum Model)	150	2005-2008				H049FID	H049FI						P30667	667SM1				SH i (Rear Drum Model)	150	2005-2008
SH SPORTY	150	2011				H050FID	RF8114				RF8505		P30910	910SM1	P30908	908SM1		SH SPORTY	150	2011
SILVER WING	150	2007-2009											P30910	910SM1	P30908	908SM1		SILVER WING	150	2007-2009
SILVER WING ABS	150	2007-2009											P30910	910SM1	P30908	908SM1		SILVER WING ABS	150	2007-2009
CH SPACY	250	1985											P30667	667SM1				CH SPACY	250	1985
CN	250	1987-1998				H020FID	H020FI							654SM1				CN	250	1987-1998
FORESIGHT	250	1998-2000												653SM1				FORESIGHT	250	1998-2000
FORESIGHT	250	2001-2007			S38005	H050FID	RF8114			H050RID	H022RI			653SM1		711SM1		FORESIGHT	250	2001-2007
FORZA	250	2000-2004			S38005	H050FID	RF8114			H050RID	H022RI	813CM55	P30813	813SM1		742SM1		FORZA	250	2000-2004
FORZA	250	2005-2007			S38005	H050FID	RF8114			H021RID	H005RI	910CM55	P30910	910SM1	P30908	908SM1		FORZA	250	2005-2007
FORZA	250	2008								H021RID	H005RI	910CM55	P30910	910SM1	P30908	908SM1		FORZA	250	2008
FORZA	250	2009										910CM55	P30910	910SM1	P30908	908SM1		FORZA	250	2009
JAZZ	250	2001-2004			S38005	H050FID	RF8114			H050RID	H022RI	813CM55	P30813	813SM1		742SM1		JAZZ	250	2001-2004
SPACY FREEWAY FUSION	250	1988											P30667	667SM1				SPACY FREEWAY FUSION	250	1988
SH i	300	2006-2009			S38003	H021FID	H021FI			H021FID	H021FI	910CM55	P30910	910SM1	P30908	908SM1		SH i	300	2006-2009
SH i	300	2010-2014			S38003		RF8118			H021FID	H021FI	910CM55	P30910	910SM1	P30908	908SM1		SH i	300	2010-2014

* articolo in esaurimento / to be discontinued

SCOOTER			DISCHI / DISKS									PASTIGLIE / PADS					LEVE / LEVERS	SCOOTER		
			ANTERIORE / FRONT					POSTERIORE / REAR				ANTERIORE / FRONT			POSTERIORE / REAR		ANTERIORE / FRONT			
MODELLO / MODEL	CC	ANNO / YEAR	W-FLO	R-FLO	S3	W-FIX	R-FIX	W-FLO	S3	W-FIX	R-FIX	CM55	P30	SM1	P30	SM1	LE	MODELLO / MODEL	CC	ANNO / YEAR
SH i ABS	300	2006-2009			S38003	H021FID	H021FI			H021FID	H021FI	910CM55	P30910	910SM1	P30908	908SM1		SH i ABS	300	2006-2009
SH i ABS	300	2010-2014			S38003		RF8118			H021FID	H021FI	910CM55	P30910	910SM1	P30908	908SM1		SH i ABS	300	2010-2014
SH i BLAUER HT Limited Edition	300	2014			S38003		RF8118			H021FID	H021FI	910CM55	P30910	910SM1	P30908	908SM1		SH i BLAUER HT Limited Edition	300	2014
SILVER WING	400	2006-2008			S38003	H021FID	H021FI			H021RID	H005RI	813CM55	P30813	813SM1	P30748	748SM1		SILVER WING	400	2006-2008
SW-T	400	2009-2014				WF8117	RF8130			WF8506	RF8513	910CM55	P30910	910SM1		720SM1		SW-T	400	2009-2014
SW-T ABS	400	2009-2014				WF8117	RF8130			WF8506	RF8513	910CM55	P30910	910SM1		720SM1		SW-T ABS	400	2009-2014
SILVER WING	600	2001-2006			S38003	H021FID	H021FI			H021RID	H005RI	813CM55	P30813	813SM1	P30748	748SM1		SILVER WING	600	2001-2006
SILVER WING	600	2007			S38004	H022FID	H022FI			H021RID	H005RI	813CM55	P30813	813SM1	P30748	748SM1		SILVER WING	600	2007
SILVER WING ABS	600	2003-2007			S38004	H022FID	H022FI			H021RID	H005RI	813CM55	P30813	813SM1	P30748	748SM1		SILVER WING ABS	600	2003-2007
SW-T ABS	600	2011-2014				WF8117	RF8130			WF8506	RF8513	910CM55	P30910	910SM1		720SM1		SW-T ABS	600	2011-2014
INTEGRA	700	2012-2013				WF7106	RF7113			WF7524	RF7546	910CM55	P30910	910SM1		742SM1		INTEGRA	700	2012-2013
HUSQVARNA																		**HUSQVARNA**		
WRS	50	1998				AP11FID	AP11FI							621SM1				WRS	50	1998
ITALJET																		**ITALJET**		
BAZOOKA 2	50	1992-1997				YA12FID	YA12FI							744SM1				BAZOOKA 2	50	1992-1997
DRAGSTER	50	1998												621SM1		621SM1		DRAGSTER	50	1998
FORMULA	50	1994-1997												760SM1		761SM1		FORMULA	50	1994-1997
FORMULA L.C.	50	1998												621SM1		621SM1		FORMULA L.C.	50	1998
PISTA 2	50	1992				YA12FID	YA12FI							744SM1				PISTA 2	50	1992
TORPEDO	50	1998												621SM1				TORPEDO	50	1998
YANKEE	50	1994				YA12FID	YA12FI							744SM1				YANKEE	50	1994
DRAGSTER	125	1999-2001								GL01RID	RF8510			621SM1		621SM1		DRAGSTER	125	1999-2001
FORMULA	125	1997												760SM1		761SM1		FORMULA	125	1997
JET SET	125	2002												621SM1				JET SET	125	2002
TORPEDO	125	1999												621SM1				TORPEDO	125	1999
DRAGSTER	180	1999-2001								GL01RID	RF8510			621SM1		621SM1		DRAGSTER	180	1999-2001
JUPITER	250	2001-2006					IT03FI					777CM55	P30777	777SM1				JUPITER	250	2001-2006
KAWASAKI																		**KAWASAKI**		
AR	80	1981-1983												702SM1				AR	80	1981-1983
J300	300	2014										716CM55	P30716	716SM1		958SM1		J300	300	2014
J300 ABS	300	2014										716CM55	P30716	716SM1		958SM1		J300 ABS	300	2014
J300 ABS SPECIAL EDITION	300	2014										716CM55	P30716	716SM1		958SM1		J300 ABS SPECIAL EDITION	300	2014
J300 SPECIAL EDITION	300	2014										716CM55	P30716	716SM1		958SM1		J300 SPECIAL EDITION	300	2014
KTM																		**KTM**		
KROSS	50	1994-1999				AP11FID	AP11FI							761SM1				KROSS	50	1994-1999
KYMCO																		**KYMCO**		
AGILITY 2T R16 (Rear Drum Model)	50	2008-2014			S38007		RF8117							869SM1				AGILITY 2T R16 (Rear Drum Model)	50	2008-2014
AGILITY 4T R16 (Rear Drum Model)	50	2008-2014			S38007		RF8117							869SM1				AGILITY 4T R16 (Rear Drum Model)	50	2008-2014
AGILITY CARRY (Rear Drum Model)	50	2011-2013					RF8131							869SM1				AGILITY CARRY (Rear Drum Model)	50	2011-2013
AGILITY R10 (Rear Drum Model)	50	2006-2014												795SM1				AGILITY R10 (Rear Drum Model)	50	2006-2014
AGILITY R12 (Rear Drum Model)	50	2005-2014				KM01FID	KM01FI							795SM1				AGILITY R12 (Rear Drum Model)	50	2005-2014
AGILITY RS (Rear Drum Model)	50	2009-2012					RF8131							795SM1				AGILITY RS (Rear Drum Model)	50	2009-2012
BET&WIN	50	2001-2006				KM04FID	KM04FI							725SM1		725SM1		BET&WIN	50	2001-2006
COBRA CROSS	50	2000-2006												701SM1				COBRA CROSS	50	2000-2006
COBRA RACER	50	2000-2006												701SM1				COBRA RACER	50	2000-2006
CX CURIO SUPER	50	1994				H017FID	H017FI											CX CURIO SUPER	50	1994
DINK	50	1998-2001				KM01FID	KM01FI							725SM1				DINK	50	1998-2001
DINK	50	2003-2010				KM04FID	KM04FI							725SM1				DINK	50	2003-2010
DINK CLASSIC	50	2003												725SM1				DINK CLASSIC	50	2003
DINK SPORTS	50	2002-2006				KM04FID	KM04FI							725SM1				DINK SPORTS	50	2002-2006
EASY	50	2001												701SM1				EASY	50	2001
FILLY LX	50	2001-2002				H017FID	H017FI							795SM1				FILLY LX	50	2001-2002
GRAND DINK 50 2T	50	2004-2007												725SM1				GRAND DINK 50 2T	50	2004-2007
HEROISM	50	1995-1999				H017FID	H017FI											HEROISM	50	1995-1999
JETIX	50	2010												673SM1		725SM1		JETIX	50	2010
K 12	50	1995-1999				H017FID	H017FI							701SM1				K 12	50	1995-1999
KB	50	1994-2000												701SM1				KB	50	1994-2000
LIKE 2T (Rear Drum Model)	50	2009				WF8112	RF8132							869SM1				LIKE 2T (Rear Drum Model)	50	2009
LIKE 2T (Rear Drum Model)	50	2010-2014				WF8112	RF8132							795SM1				LIKE 2T (Rear Drum Model)	50	2010-2014
LIKE 4T (Rear Drum Model)	50	2009				WF8112	RF8132							869SM1				LIKE 4T (Rear Drum Model)	50	2009
LIKE 4T (Rear Drum Model)	50	2010-2014				WF8112	RF8132							795SM1				LIKE 4T (Rear Drum Model)	50	2010-2014
LOOPING	50	1998												701SM1				LOOPING	50	1998
NEXXON	50	2008-2009												673SM1		673SM1		NEXXON	50	2008-2009
PEOPLE	50	1999-2011					RF8129							869SM1				PEOPLE	50	1999-2011
PEOPLE S 2T	50	2005-2010												869SM1				PEOPLE S 2T	50	2005-2010

* articolo in esaurimento / to be discontinued

SCOOTER

			DISCHI / DISKS								
			ANTERIORE / FRONT					POSTERIORE / REAR			
MODELLO / MODEL	CC	ANNO / YEAR	W-FLO	R-FLO	S3	W-FIX	R-FIX	W-FLO	S3	W-FIX	R-FIX
PEOPLE S 4T	50	2006-2011									
SCOUT	50	1996-2006									
SENTO	50	2008-2009									
SNIPER	50	1993				H017FID	H017FI				
SNIPER DD	50	1994-1996				H017FID	H017FI				
SPACER	50	1999-2010									
SUPER 8 2T (Rear Drum Model)	50	2009-2014									
SUPER 8 4T (Rear Drum Model)	50	2009-2014									
SUPER 9 AC	50	1999-2007									
SUPER 9 LC	50	2002-2007									
TOP BOY	50	1998-2006				KM01FID	KM01FI				
TOP BOY OFFROAD	50	1999									
VISA R	50	2011									
VITALITY	50	2004				KM01FID	KM01FI				
VITALITY 2T	50	2004-2009				KM04FID	KM04FI				
VITALITY 4T	50	2004-2009				KM01FID	KM01FI				
YAGER	50	1998-2010									
YUP	50	2002-2009									
YUP NEW CLASSIC	50	2001									
ZX SUPER FEVER	50	1996-2006									
COBRA RACER	100	1999-2000									
KB	100	1999-2000									
SPIKE	100	2000-2006									
TOP BOY	100	1997									
ACTIV	110	2004-2006									
VISA R	110	2011									
ACTIV	125	2004-2006									
AGILITY CARRY (Rear Drum Model)	125	2011-2012				KM01FID	KM01FI				
AGILITY R12 (Rear Drum Model)	125	2005-2010				KM01FID	KM01FI				
AGILITY R16	125	2008-2014			S38007		RF8117			SZ08RID	SZ08RI
AGILITY R16 PLUS	125	2014			S38007		RF8117			SZ08RID	SZ08RI
AGILITY RS (Rear Drum Model)	125	2009-2010					RF8131				
AGILITY RS (Rear Drum Model)	125	2011-2012					RF8131				
BET&WIN	125	1999-2006									
DINK	125	1996-2004				KM01FID	KM01FI			KM01FID	KM01FI
DINK	125	2006-2014									
DINK CLASSIC	125	2002-2003				KM04FID	KM04FI				
DINK LX	125	1998-2000									
DOWNTOWN i	125	2009-2014	WL8002R				RF8120			SZ08RID	SZ08RI
G DINK	125	2012				SZ08RID	SZ08RI			WF8507	RF8514
GRAND DINK	125	2001-2007				KM04FID	KM04FI			KM04RID	KM04RI
HEROISM	125	1995-1997				H017FID	H017FI				
JETIX	125	2010									
JOYRIDE	125	2001-2002									
K-XCT	125	2012-2014	WL8002R				RF8120				
LIKE	125	2009				WF8112	RF8132			WF8507	RF8514
LIKE	125	2010-2012				WF8112	RF8132			WF8507	RF8514
LIKE LX	125	2012				WF8112	RF8132			WF8507	RF8514
LOOKER S	125	2007-2008									
MILER	125	2001-2007									
MOVIE	125	1999-2000									
MOVIE XL	125	2001-2009				KM04FID	KM04FI				
NEXXON	125	2007-2008									
PEOPLE (Rear Drum Model)	125	1999-2014					RF8129				
PEOPLE GTI	125	2010-2014									
PEOPLE ONE (Rear Drum Model)	125	2013-2014									
PEOPLE S (Rear Drum Model)	125	2005-2006			S38007		RF8117				
PEOPLE S DD	125	2007-2014			S38007		RF8117		S38007		RF8117
SECTOR	125	1998-2001									
SPACER	125	1999-2004									
SPYKE R	125	2004-2006									
STRAIGHT	125	2005-2006									
SUPER 8	125	2008-2010									
SUPER 9	125	2000									
SUPER DINK	125	2009-2013	WL8002R				RF8120			SZ08RID	SZ08RI
VIVIO	125	1999-2003									
YAGER	125	2000-2001									

SCOOTER

	PASTIGLIE / PADS					LEVE / LEVERS			
	ANTERIORE / FRONT			POSTERIORE / REAR		ANTERIORE / FRONT			
CM55	P30	SM1	P30	SM1	LE	MODELLO / MODEL	CC	ANNO / YEAR
		869SM1				PEOPLE S 4T	50	2006-2011
		701SM1				SCOUT	50	1996-2006
		795SM1				SENTO	50	2008-2009
						SNIPER	50	1993
				774SM1		SNIPER DD	50	1994-1996
		725SM1				SPACER	50	1999-2010
		869SM1				SUPER 8 2T (Rear Drum Model)	50	2009-2014
		869SM1				SUPER 8 4T (Rear Drum Model)	50	2009-2014
		725SM1				SUPER 9 AC	50	1999-2007
		725SM1		869SM1		SUPER 9 LC	50	2002-2007
		701SM1				TOP BOY	50	1998-2006
		701SM1				TOP BOY OFFROAD	50	1999
		669SM1				VISA R	50	2011
						VITALITY	50	2004
		795SM1				VITALITY 2T	50	2004-2009
		795SM1				VITALITY 4T	50	2004-2009
		725SM1				YAGER	50	1998-2010
		795SM1				YUP	50	2002-2009
		869SM1				YUP NEW CLASSIC	50	2001
		701SM1				ZX SUPER FEVER	50	1996-2006
		725SM1				COBRA RACER	100	1999-2000
		701SM1				KB	100	1999-2000
		673SM1				SPIKE	100	2000-2006
		701SM1				TOP BOY	100	1997
		725SM1				ACTIV	110	2004-2006
		669SM1				VISA R	110	2011
	P30725	725SM1				ACTIV	125	2004-2006
		869SM1				AGILITY CARRY (Rear Drum Model)	125	2011-2012
		795SM1				AGILITY R12 (Rear Drum Model)	125	2005-2010
		869SM1		669SM1		AGILITY R16	125	2008-2014
		869SM1		669SM1		AGILITY R16 PLUS	125	2014
		869SM1				AGILITY RS (Rear Drum Model)	125	2009-2010
		795SM1				AGILITY RS (Rear Drum Model)	125	2011-2012
	P30725	725SM1	P30725	725SM1		BET&WIN	125	1999-2006
	P30725	725SM1	P30725	725SM1		DINK	125	1996-2004
	P30725	725SM1	P30725	725SM1		DINK	125	2006-2014
	P30725	725SM1	P30725	725SM1		DINK CLASSIC	125	2002-2003
	P30725	725SM1	P30725	725SM1		DINK LX	125	1998-2000
		720SM1	P30945	945SM1		DOWNTOWN i	125	2009-2014
716CM55	P30716	716SM1		948SM1		G DINK	125	2012
	P30725	725SM1	P30725	725SM1		GRAND DINK	125	2001-2007
						HEROISM	125	1995-1997
		673SM1	P30725	725SM1		JETIX	125	2010
			P30725	725SM1		JOYRIDE	125	2001-2002
		720SM1	P30945	945SM1		K-XCT	125	2012-2014
		869SM1				LIKE	125	2009
		795SM1	P30725	725SM1		LIKE	125	2010-2012
		795SM1		669SM1		LIKE LX	125	2012
		869SM1				LOOKER S	125	2007-2008
	P30725	725SM1	P30725	725SM1		MILER	125	2001-2007
		795SM1				MOVIE	125	1999-2000
	P30725	725SM1				MOVIE XL	125	2001-2009
		673SM1		673SM1		NEXXON	125	2007-2008
		869SM1				PEOPLE (Rear Drum Model)	125	1999-2014
		853SM1		948SM1		PEOPLE GTI	125	2010-2014
		869SM1				PEOPLE ONE (Rear Drum Model)	125	2013-2014
		869SM1				PEOPLE S (Rear Drum Model)	125	2005-2006
		869SM1		958SM1		PEOPLE S DD	125	2007-2014
	P30725	725SM1				SECTOR	125	1998-2001
	P30725	725SM1	P30725	725SM1		SPACER	125	1999-2004
	P30725	725SM1	P30725	725SM1		SPYKE R	125	2004-2006
	P30725	725SM1				STRAIGHT	125	2005-2006
		869SM1				SUPER 8	125	2008-2010
				869SM1		SUPER 9	125	2000
		720SM1	P30945	945SM1		SUPER DINK	125	2009-2013
		795SM1				VIVIO	125	1999-2003
	P30725	725SM1	P30725	725SM1		YAGER	125	2000-2001

* articolo in esaurimento / to be discontinued

SCOOTER			DISCHI / DISKS									PASTIGLIE / PADS					LEVE / LEVERS	SCOOTER		
			ANTERIORE / FRONT					POSTERIORE / REAR				ANTERIORE / FRONT			POSTERIORE / REAR		ANTERIORE / FRONT			
MODELLO / MODEL	CC	ANNO / YEAR	W-FLO	R-FLO	S3	W-FIX	R-FIX	W-FLO	S3	W-FIX	R-FIX	CM55	P30	SM1	P30	SM1	LE	MODELLO / MODEL	CC	ANNO / YEAR
AGILITY R16	150	2008-2012			S38007		RF8117			SZ08RID	SZ08RI			869SM1	P30725	725SM1		AGILITY R16	150	2008-2012
BET&WIN	150	2001-2006											P30725	725SM1	P30725	725SM1		BET&WIN	150	2001-2006
DINK	150	1997-2004				KM01FID	KM01FI			KM01FID	KM01FI		P30725	725SM1	P30725	725SM1		DINK	150	1997-2004
DINK CLASSIC	150	2002-2003				KM04FID	KM04FI						P30725	725SM1				DINK CLASSIC	150	2002-2003
DINK LX	150	1998-2000											P30725	725SM1	P30725	725SM1		DINK LX	150	1998-2000
GRAND DINK	150	2001-2007								KM04RID	KM04RI		P30725	725SM1	P30725	725SM1		GRAND DINK	150	2001-2007
HEROISM	150	1995-1997				H017FID	H017FI									774SM1		HEROISM	150	1995-1997
JETIX	150	2010												673SM1	P30725	725SM1		JETIX	150	2010
JOYRIDE	150	2001													P30725	725SM1		JOYRIDE	150	2001
MILER	150	2001-2007											P30725	725SM1	P30725	725SM1		MILER	150	2001-2007
MOVIE XL	150	2001-2009				KM04FID	KM04FI						P30725	725SM1				MOVIE XL	150	2001-2009
PEOPLE	150	1999-2004					RF8129							869SM1				PEOPLE	150	1999-2004
SPACER	150	1999-2004											P30725	725SM1	P30725	725SM1		SPACER	150	1999-2004
VIVIO	150	2000-2003												795SM1				VIVIO	150	2000-2003
YAGER	150	2001											P30725	725SM1	P30725	725SM1		YAGER	150	2001
AGILITY R16	200	2009-2014			S38007		RF8117			SZ08RID	SZ08RI			869SM1	P30725	725SM1		AGILITY R16	200	2009-2014
AGILITY R16i PLUS	200	2014			S38007		RF8117			SZ08RID	SZ08RI			869SM1	P30725	725SM1		AGILITY R16i PLUS	200	2014
DINK	200	2006-2014											P30725	725SM1	P30725	725SM1		DINK	200	2006-2014
DINK CLASSIC	200	2004-2005				KM04FID	KM04FI						P30725	725SM1	P30725	725SM1		DINK CLASSIC	200	2004-2005
DOWNTOWN i	200	2010-2014	WL8002R				RF8120			SZ08RID	SZ08RI			720SM1	P30945	945SM1		DOWNTOWN i	200	2010-2014
LIKE	200	2009				WF8112	RF8132			WF8507	RF8514			869SM1	P30725	725SM1		LIKE	200	2009
LIKE	200	2010-2014				WF8112	RF8132			WF8507	RF8514			795SM1	P30725	725SM1		LIKE	200	2010-2014
PEOPLE GTI	200	2010-2014												853SM1		958SM1		PEOPLE GTI	200	2010-2014
PEOPLE S	200	2007-2014			S38007		RF8117		S38007		RF8117			869SM1		958SM1		PEOPLE S	200	2007-2014
PEOPLE S (Rear Drum Model)	200	2005-2006			S38007		RF8117							869SM1				PEOPLE S (Rear Drum Model)	200	2005-2006
BET&WIN	250	2000-2006				KM04FID	KM04FI			KM04RID	KM04RI		P30725	725SM1	P30725	725SM1		BET&WIN	250	2000-2006
GRAND DINK	250	2001-2006				KM04FID	KM04FI			KM04RID	KM04RI			883SM1		884SM1		GRAND DINK	250	2001-2006
PEOPLE	250	2003-2004										716CM55	P30716	716SM1	P30725	725SM1		PEOPLE	250	2003-2004
PEOPLE	250	2005-2006											P30725	725SM1	P30725	725SM1		PEOPLE	250	2005-2006
PEOPLE S	250	2006-2009			S38007		RF8117		S38007		RF8117		P30696 / P30725	696SM1 / 725SM1		958SM1		PEOPLE S	250	2006-2009
SUPER 9	250	2000												701SM1		869SM1		SUPER 9	250	2000
XCITING	250	2004			S38006		KM05FI			KM05RID	KM05RI	716CM55	P30716	716SM1		958SM1		XCITING	250	2004
XCITING	250	2005-2008			S38006		KM05FI			KM05RID	KM05RI	716CM55	P30716	716SM1	P30725	958SM1		XCITING	250	2005-2008
YUP	250	2003-2006								KM04RID	KM04RI		P30725	725SM1	P30725	725SM1		YUP	250	2003-2006
DOWNTOWN i	300	2009-2014	WL8002R				RF8120			SZ08RID	SZ08RI	720CM55		720SM1	P30945	945SM1		DOWNTOWN i	300	2009-2014
DOWNTOWN i ABS	300	2010-2014	WL8002R				RF8120			SZ08RID	SZ08RI	720CM55		720SM1	P30945	945SM1		DOWNTOWN i ABS	300	2010-2014
G DINK	300	2012-2013				SZ08RID	SZ08RI			WF8507	RF8514	716CM55	P30716	716SM1	P30725			G DINK	300	2012-2013
K-XCT i	300	2012-2013												853SM1		958SM1		K-XCT i	300	2012-2013
K-XCT i ABS	300	2014												853SM1		958SM1		K-XCT i ABS	300	2014
PEOPLE GTI	300	2010-2014												853SM1	P30945	945SM1		PEOPLE GTI	300	2010-2014
PEOPLE GTI ABS	300	2012												853SM1	P30945	945SM1		PEOPLE GTI ABS	300	2012
PEOPLE GTI ABS	300	2013-2014												853SM1		958SM1		PEOPLE GTI ABS	300	2013-2014
PEOPLE S	300	2008-2010			S38007		RF8117		S38007		RF8117		P30696 / P30725	696SM1 / 725SM1				PEOPLE S	300	2008-2010
SUPER DINK	300	2009-2012	WL8002R				RF8120			SZ08RID	SZ08RI	716CM55	P30716	716SM1	P30945	945SM1		SUPER DINK	300	2009-2012
XCITING R	300	2009-2011			S38006		KM05FI			KM05RID	KM05RI	720CM55		720SM1		958SM1		XCITING R	300	2009-2011
XCITING Ri	300	2008-2009			S38006		KM05FI			KM05RID	KM05RI	720CM55		720SM1		958SM1		XCITING Ri	300	2008-2009
XCITING Ri	300	2010-2014										720CM55		720SM1		958SM1		XCITING Ri	300	2010-2014
XCITING	400	2012-2013										933CM55		933SM1	P30716	716SM1		XCITING	400	2012-2013
XCITING	500	2004-2009			S38006		KM05FI			KM05RID	KM05RI	716CM55	P30716	716SM1	P30716	716SM1		XCITING	500	2004-2009
XCITING R	500	2007-2011			S38006		KM05FI			KM05RID	KM05RI	716CM55	P30716	716SM1	P30716	716SM1		XCITING R	500	2007-2011
MYROAD	700	2011										716CM55	P30716	716SM1	P30716	716SM1		MYROAD	700	2011
LML																		LML		
STAR 2T (Rear Drum Model)	125	2010-2012				PI01FID	PI01FI							760SM1				STAR 2T (Rear Drum Model)	125	2010-2012
STAR 4T (Rear Drum Model)	125	2010-2012				PI01FID	PI01FI							760SM1				STAR 4T (Rear Drum Model)	125	2010-2012
STAR DELUXE (Rear Drum Model)	125	2001-2003				PI01FID	PI01FI							760SM1				STAR DELUXE (Rear Drum Model)	125	2001-2003
STAR 2T (Rear Drum Model)	150	2010-2012				PI01FID	PI01FI							760SM1				STAR 2T (Rear Drum Model)	150	2010-2012
STAR 4T (Rear Drum Model)	150	2010-2012				PI01FID	PI01FI							760SM1				STAR 4T (Rear Drum Model)	150	2010-2012
STAR DELUXE (Rear Drum Model)	150	2001-2003				PI01FID	PI01FI							760SM1				STAR DELUXE (Rear Drum Model)	150	2001-2003
STAR 4T (Rear Drum Model)	151	2010-2012				PI01FID	PI01FI							760SM1				STAR 4T (Rear Drum Model)	151	2010-2012
STAR 4T (Rear Drum Model)	200	2010-2012				PI01FID	PI01FI							760SM1				STAR 4T (Rear Drum Model)	200	2010-2012
MALAGUTI																		MALAGUTI		
CENTRO BASE	50	1993-1994				PI01FID	PI01FI							694SM1				CENTRO BASE	50	1993-1994
CENTRO SL	50	1994-2000				PI01FID	PI01FI							694SM1				CENTRO SL	50	1994-2000
CENTRO SL 4T	50	2008-2011												702SM1				CENTRO SL 4T	50	2008-2011
CENTRO SL CAT	50	1994-2000				PI01FID	PI01FI							694SM1				CENTRO SL CAT	50	1994-2000
CIAK	50	1999												761SM1				CIAK	50	1999

* articolo in esaurimento / to be discontinued

SCOOTER

			DISCHI / DISKS									PASTIGLIE / PADS					LEVE / LEVERS	SCOOTER		
			ANTERIORE / FRONT					POSTERIORE / REAR				ANTERIORE / FRONT			POSTERIORE / REAR		ANTERIORE / FRONT			
MODELLO / MODEL	CC	ANNO / YEAR	W-FLO	R-FLO	S3	W-FIX	R-FIX	W-FLO	S3	W-FIX	R-FIX	CM55	P30	SM1	P30	SM1	LE	MODELLO / MODEL	CC	ANNO / YEAR
CROSSER CR1 (Rear Drum Model)	50	1995-1998				PE01FID	PE01FI							671SM1				CROSSER CR1 (Rear Drum Model)	50	1995-1998
CROSSER EL	50	1997				PE01FID	PE01FI							761SM1				CROSSER EL	50	1997
DRAKON NKD	50	2005-2009												828SM1		621SM1		DRAKON NKD	50	2005-2009
F10	50	1992-1994					MA01FI							702SM1				F10	50	1992-1994
F10	50	1995-2005					MA01FI							761SM1				F10	50	1995-2005
F10 JET LINE	50	1997-1999					MA01FI							761SM1				F10 JET LINE	50	1997-1999
F12 PHANTOM	50	1994-1998				PE01FID	PE01FI							671SM1				F12 PHANTOM	50	1994-1998
F12 PHANTOM A.C.	50	1999-2003				PE01FID	PE01FI							761SM1				F12 PHANTOM A.C.	50	1999-2003
F12 PHANTOM L.C.	50	1994-1998				PE01FID	PE01FI							694SM1				F12 PHANTOM L.C.	50	1994-1998
F12 PHANTOM twin disk	50	1999-2005				MA04FID	MA04FI			PE01FID	PE01FI			761SM1		761SM1		F12 PHANTOM twin disk	50	1999-2005
F12R PHANTOM A.C.	50	2007-2011				PE01FID	PE01FI			PE01FID	PE01FI			761SM1				F12R PHANTOM A.C.	50	2007-2011
F12R PHANTOM L.C.	50	2007-2011				PE01FID	PE01FI			PE01FID	PE01FI			702SM1		761SM1		F12R PHANTOM L.C.	50	2007-2011
F15 FIREFOX (Rear Drum Model)	50	1996-1998				PE01FID	PE01FI							671SM1				F15 FIREFOX (Rear Drum Model)	50	1996-1998
F15 FIREFOX L.C.	50	1999-2005				MA04FID	MA04FI			PE01FID	PE01FI			761SM1		761SM1		F15 FIREFOX L.C.	50	1999-2005
F15 FIREFOX twin disk	50	1996-1998				PE01FID	PE01FI			PE01FID	PE01FI			694SM1		761SM1		F15 FIREFOX twin disk	50	1996-1998
FIFTY BSF-BLACK SPECIAL	50	1986-1988												671SM1				FIFTY BSF-BLACK SPECIAL	50	1986-1988
FIFTY EVOLUTION	50	1991-1998												671SM1				FIFTY EVOLUTION	50	1991-1998
FIFTY FULL CX	50	1986-1998												671SM1				FIFTY FULL CX	50	1986-1998
FIFTY RAID	50	1991-1998												671SM1				FIFTY RAID	50	1991-1998
FIFTY TOP	50	1989-1998												671SM1				FIFTY TOP	50	1989-1998
YESTERDAY	50	1997-2001					MA01FI							761SM1				YESTERDAY	50	1997-2001
CIAK	100	1999												761SM1		761SM1		CIAK	100	1999
F12 PHANTOM twin disk	100	1999-2001				MA04FID	MA04FI			PE01FID	PE01FI			761SM1		761SM1		F12 PHANTOM twin disk	100	1999-2001
BLOG	125	2009-2011												795SM1		685SM1		BLOG	125	2009-2011
CENTRO	125	2007-2011												795SM1		685SM1		CENTRO	125	2007-2011
CIAK	125	2001												761SM1		761SM1		CIAK	125	2001
F18 WARRIOR	125	2000-2003												761SM1		840SM1		F18 WARRIOR	125	2000-2003
MADISON	125	1999-2001												770SM1		840SM1		MADISON	125	1999-2001
MADISON R	125	1999-2005												770SM1		840SM1		MADISON R	125	1999-2005
PHANTOM MAX	125	2004												770SM1		828SM1		PHANTOM MAX	125	2004
RUNNER	125	1987-1988												684SM1				RUNNER	125	1987-1988
CIAK	150	2001												761SM1		761SM1		CIAK	150	2001
F18 WARRIOR	150	2000-2003												761SM1				F18 WARRIOR	150	2000-2003
MADISON	150	1999-2001												770SM1		840SM1		MADISON	150	1999-2001
MADISON F	150	2000-2001												770SM1		842SM1		MADISON F	150	2000-2001
BLOG	160	2009-2011												795SM1		685SM1		BLOG	160	2009-2011
CENTRO	160	2007-2011												795SM1		685SM1		CENTRO	160	2007-2011
MADISON	180	2001-2002												770SM1		840SM1		MADISON	180	2001-2002
MADISON S	200	2003-2004												770SM1		840SM1		MADISON S	200	2003-2004
PHANTOM MAX	200	2004												770SM1		828SM1		PHANTOM MAX	200	2004
MADISON	250	1999-2003					MA03FI							853SM1		840SM1		MADISON	250	1999-2003
MADISON RS	250	2004-2005												770SM1		840SM1		MADISON RS	250	2004-2005
PASSWORD	250	2005-2009												770SM1		840SM1		PASSWORD	250	2005-2009
PHANTOM MAX	250	2005-2006												770SM1		840SM1		PHANTOM MAX	250	2005-2006
MADISON K	400	2002-2006									MA03FI			853SM1		840SM1		MADISON K	400	2002-2006
SPIDER MAX GT	500	2005-2006												684SM1		840SM1		SPIDER MAX GT	500	2005-2006
MBK																		**MBK**		
BOOSTER 10” WHEELS	50	2009-2010												761SM1				BOOSTER 10” WHEELS	50	2009-2010
BOOSTER 12” WHEELS	50	2000-2010				MB02FID	MB02FI							761SM1				BOOSTER 12” WHEELS	50	2000-2010
BOOSTER NAKED	50	2003-2006												761SM1				BOOSTER NAKED	50	2003-2006
BOOSTER NAKED 12” WHEELS	50	2009				MB02FID	MB02FI							761SM1				BOOSTER NAKED 12” WHEELS	50	2009
BOOSTER NG	50	1995-1998				H032FID	H032FI							761SM1				BOOSTER NG	50	1995-1998
BOOSTER R	50	1993-1995				YA12FID	YA12FI							761SM1				BOOSTER R	50	1993-1995
BOOSTER ROCKET	50	1997												761SM1				BOOSTER ROCKET	50	1997
BOOSTER SPIRIT	50	1996-1998				YA12FID	YA12FI							761SM1				BOOSTER SPIRIT	50	1996-1998
BOOSTER SPIRIT	50	1999-2005				MB02FID	MB02FI							761SM1				BOOSTER SPIRIT	50	1999-2005
BOOSTER TRACK	50	1996-1998												761SM1				BOOSTER TRACK	50	1996-1998
EVOLIS	50	1992-1994				YA12FID	YA12FI							761SM1				EVOLIS	50	1992-1994
FIZZ	50	1994-1997				YA12FID	YA12FI							761SM1				FIZZ	50	1994-1997
FLIPPER	50	1999-2010												761SM1				FLIPPER	50	1999-2010
FORTE (Rear Drum Model)	50	1994-1995				YA12FID	YA12FI							761SM1				FORTE (Rear Drum Model)	50	1994-1995
MACH G	50	2002-2010												761SM1				MACH G	50	2002-2010
NITRO	50	1997-2010				H032FID	H032FI			H032FID	H032FI			779SM1		814SM1		NITRO	50	1997-2010
OVETTO	50	1997-2010				AP11FID	AP11FI							761SM1				OVETTO	50	1997-2010
STUNT	50	2000-2006				H032FID	H032FI							814SM1				STUNT	50	2000-2006
STUNT NAKED	50	2005-2010				H032FID	H032FI							814SM1				STUNT NAKED	50	2005-2010

* articolo in esaurimento / to be discontinued

SCOOTER			DISCHI / DISKS									PASTIGLIE / PADS					LEVE / LEVERS	SCOOTER		
			ANTERIORE / FRONT					POSTERIORE / REAR				ANTERIORE / FRONT			POSTERIORE / REAR		ANTERIORE / FRONT			
MODELLO / MODEL	CC	ANNO / YEAR	W-FLO	R-FLO	S3	W-FIX	R-FIX	W-FLO	S3	W-FIX	R-FIX	CM55	P30	SM1	P30	SM1	LE	MODELLO / MODEL	CC	ANNO / YEAR
TARGET	50	1992-1994				YA12FID	YA12FI							744SM1				TARGET	50	1992-1994
X-POWER	50	2004-2010												770SM1		621SM1		X-POWER	50	2004-2010
EVOLIS	80	1994-1997				YA12FID	YA12FI							761SM1				EVOLIS	80	1994-1997
BOOSTER	100	1999-2002												744SM1				BOOSTER	100	1999-2002
NITRO	100	1999-2003				H032FID	H032FI							761SM1				NITRO	100	1999-2003
OVETTO	100	1999-2002				AP11FID	AP11FI							761SM1				OVETTO	100	1999-2002
CITYLINER	125	2008-2010											P30822	720SM1		822SM1		CITYLINER	125	2008-2010
DOODO	125	2000-2005												761SM1				DOODO	125	2000-2005
FLAME R/F	125	1995-2003												685SM1				FLAME R/F	125	1995-2003
SKYCRUISER	125	2006-2010												926SM1				SKYCRUISER	125	2006-2010
SKYLINER	125	1998-2000				MB03FID	MB03FI					746CM55		746SM1				SKYLINER	125	1998-2000
SKYLINER	125	2001-2010				MB03FID	MB03FI				RF8509	746CM55		746SM1		828SM1		SKYLINER	125	2001-2010
THUNDER	125	2001-2003										746CM55		746SM1				THUNDER	125	2001-2003
YW Z (Rear Drum Model)	125	2010												961SM1				YW Z (Rear Drum Model)	125	2010
DOODO	150	2000-2005												761SM1				DOODO	150	2000-2005
SKYLINER	150	1998-2001				MB03FID	MB03FI					746CM55		746SM1				SKYLINER	150	1998-2001
SKYLINER	150	2002				MB03FID	MB03FI				RF8509	746CM55		746SM1		828SM1		SKYLINER	150	2002
THUNDER	150	2001-2003										746CM55		746SM1				THUNDER	150	2001-2003
VERTEX	150	1997												685SM1				VERTEX	150	1997
SKYLINER	180	2003				MB03FID	MB03FI					746CM55		746SM1		828SM1		SKYLINER	180	2003
SKYLINER	250	2000-2003				YA32FID	RF8135			YA32RID	YA32RI	777CM55	P30777	777SM1	P30822	822SM1		SKYLINER	250	2000-2003
SKYLINER ABS	250	2003				YA32FID	RF8135			YA32RID	YA32RI	777CM55	P30777	777SM1	P30822	822SM1		SKYLINER ABS	250	2003
KILIBRE	300	2003-2004				MB04FID	RF8136			MB04RID		746CM55		746SM1		746SM1		KILIBRE	300	2003-2004
SKYLINER	400	2004										777CM55	P30777	777SM1	P30904	904SM1		SKYLINER	400	2004
MOTRON																		**MOTRON**		
COMPACT RACING ES	50	1989-1992				PE01FID	PE01FI							671SM1				COMPACT RACING ES	50	1989-1992
COMPACT WF	50	1988-1992					MA01FI							671SM1				COMPACT WF	50	1988-1992
GL4 FLASH ID	50	1989-1993				PE01FID	PE01FI							671SM1				GL4 FLASH ID	50	1989-1993
RZ1 ES	50	1989-1994				PE01FID	PE01FI							671SM1				RZ1 ES	50	1989-1994
SPIKE	50	1998												761SM1				SPIKE	50	1998
STING	50	1995												671SM1				STING	50	1995
SYNCRO	50	1998												761SM1				SYNCRO	50	1998
THUNDER	50	1995												671SM1				THUNDER	50	1995
XLE	50	1988-1993												671SM1		612SM1		XLE	50	1988-1993
PEUGEOT																		**PEUGEOT**		
BUXY (Brembo)	50	1994-1999				PE01FID	PE01FI							761SM1				BUXY (Brembo)	50	1994-1999
ELYSEO (A.J.P.)	50	1998-2000				PE01FID	PE01FI							621SM1				ELYSEO (A.J.P.)	50	1998-2000
JET FORCE	50	2003												621SM1		621SM1		JET FORCE	50	2003
LOOXOR	50	2001												621SM1				LOOXOR	50	2001
LUDIX	50	2004												621SM1				LUDIX	50	2004
SPEEDAKE (Brembo)	50	1994-1999				PE01FID	PE01FI							761SM1				SPEEDAKE (Brembo)	50	1994-1999
SPEEDFIGHT 2 A/C	50	2001				PE02FID	PE02FI							621SM1				SPEEDFIGHT 2 A/C	50	2001
SPEEDFIGHT 2 L/C DD	50	2001				PE02FID	PE02FI			PE02FID	PE02FI			621SM1		621SM1		SPEEDFIGHT 2 L/C DD	50	2001
SPEEDFIGHT LC (Brembo)	50	1996-2000				PE02FID	PE02FI							761SM1				SPEEDFIGHT LC (Brembo)	50	1996-2000
SQUAB (AJP)	50	1994-2001				PE01FID	PE01FI							621SM1				SQUAB (AJP)	50	1994-2001
SQUAB (Hengtong)	50	1994-2001				PE01FID	PE01FI							702SM1				SQUAB (Hengtong)	50	1994-2001
SV GEO	50	1992				PE01FID	PE01FI											SV GEO	50	1992
TREKKER (AJP)	50	1997				PE01FID	PE01FI							621SM1				TREKKER (AJP)	50	1997
TREKKER (Hengtong)	50	1997				PE01FID	PE01FI							702SM1				TREKKER (Hengtong)	50	1997
TWEET (Rear Drum Model)	50	2010-2013												796SM1				TWEET (Rear Drum Model)	50	2010-2013
TWEET RS	50	2010-2013												796SM1		808SM1		TWEET RS	50	2010-2013
VIVACITY (AJP)	50	1999				PE01FID	PE01FI							621SM1				VIVACITY (AJP)	50	1999
VIVACITY (Hengtong)	50	2005												702SM1				VIVACITY (Hengtong)	50	2005
ZENITH LUXE	50	1996					MA01FI							761SM1				ZENITH LUXE	50	1996
SV GEO	80	1991				PE01FID	PE01FI											SV GEO	80	1991
ELYSEO	100	2002												621SM1		621SM1		ELYSEO	100	2002
ELYSEO (A.J.P.)	100	1998-2001												621SM1				ELYSEO (A.J.P.)	100	1998-2001
LOOXOR	100	2001												621SM1		621SM1		LOOXOR	100	2001
SPEEDFIGHT	100	1997				PE02FID	PE02FI			PE02FID	PE02FI			621SM1		621SM1		SPEEDFIGHT	100	1997
TREKKER	100	1998				PE01FID	PE01FI							621SM1				TREKKER	100	1998
VIVACITY (AJP)	100	1999-2004				PE01FID	PE01FI							621SM1				VIVACITY (AJP)	100	1999-2004
VIVACITY (Hengtong)	100	2005				PE01FID	PE01FI							702SM1				VIVACITY (Hengtong)	100	2005
ELYSEO	125	2000												770SM1		878SM1		ELYSEO	125	2000
ELYSEO (A.J.P.)	125	1999												621SM1				ELYSEO (A.J.P.)	125	1999
GEO RS	125	2008				WF8118	RF8128											GEO RS	125	2008

* articolo in esaurimento / to be discontinued

SCOOTER			DISCHI / DISKS									PASTIGLIE / PADS					LEVE / LEVERS	SCOOTER		
			ANTERIORE / FRONT					POSTERIORE / REAR				ANTERIORE / FRONT			POSTERIORE / REAR		ANTERIORE / FRONT			
MODELLO / MODEL	CC	ANNO / YEAR	W-FLO	R-FLO	S3	W-FIX	R-FIX	W-FLO	S3	W-FIX	R-FIX	CM55	P30	SM1	P30	SM1	LE	MODELLO / MODEL	CC	ANNO / YEAR
GEOPOLIS	125	2008-2009								WF8504	RF8515			888SM1		878SM1		GEOPOLIS	125	2008-2009
JET FORCE	125	2003												770SM1		878SM1		JET FORCE	125	2003
LOOXOR	125	2001-2004												621SM1		621SM1		LOOXOR	125	2001-2004
LOOXOR	125	2005										813CM55	P30813	813SM1		878SM1		LOOXOR	125	2005
LUDIX	125	2004												621SM1				LUDIX	125	2004
SATELIS	125	2004				WF8118	RF8128							770SM1		878SM1		SATELIS	125	2004
SATELIS	125	2005-2008				WF8118	RF8128									878SM1		SATELIS	125	2005-2008
SATELIS ABS	125	2004				WF8118	RF8128							770SM1		878SM1		SATELIS ABS	125	2004
SATELIS ABS	125	2005-2008				WF8118	RF8128									878SM1		SATELIS ABS	125	2005-2008
SV GEO	125	1991-1995				PE01FID	PE01FI											SV GEO	125	1991-1995
TWEET	125	2012-2013				WF8116	RF8142			WF8116	RF8142			796SM1		808SM1		TWEET	125	2012-2013
TWEET (Rear Drum Model)	125	2010-2012												796SM1				TWEET (Rear Drum Model)	125	2010-2012
TWEET RS	125	2010-2013				WF8116	RF8142			WF8116	RF8142			796SM1		808SM1		TWEET RS	125	2010-2013
ELYSEO	150	2000												770SM1		878SM1		ELYSEO	150	2000
ELYSTAR	150	2003												770SM1		878SM1		ELYSTAR	150	2003
LOOXOR	150	2002												621SM1		621SM1		LOOXOR	150	2002
TWEET (Rear Drum Model)	150	2010-2012												796SM1				TWEET (Rear Drum Model)	150	2010-2012
TWEET RS	150	2010-2013				WF8116	RF8142			WF8116	RF8142			796SM1		808SM1		TWEET RS	150	2010-2013
GEO RS	250	2008				WF8118	RF8128											GEO RS	250	2008
GEOPOLIS	250	2006-2009				WF8118	RF8128			WF8504	RF8515			888SM1		878SM1		GEOPOLIS	250	2006-2009
SATELIS (AJP caliper)	250	2007-2011												770SM1		878SM1		SATELIS (AJP caliper)	250	2007-2011
SATELIS (Nissin caliper)	250	2007-2011												795SM1		795SM1		SATELIS (Nissin caliper)	250	2007-2011
SV	250	2002-2007			S38005	HO50FID	RF8114						P30813	813SM1				SV	250	2002-2007
GEOPOLIS	300	2013				WF8118	RF8128			WF8508	RF8520			795SM1		795SM1		GEOPOLIS	300	2013
GEO RS	400	2008				WF8118	RF8128											GEO RS	400	2008
GEOPOLIS	400	2008-2009				WF8118	RF8128			WF8504	RF8515			888SM1		878SM1		GEOPOLIS	400	2008-2009
SATELIS	400	2008-2011										716CM55	P30716	716SM1		795SM1		SATELIS	400	2008-2011
GEOPOLIS	500	2008-2012				WF8118	RF8128			WF8509	RF8521	716CM55	P30716	716SM1		795SM1		GEOPOLIS	500	2008-2012
SATELIS	500	2007-2012										716CM55	P30716	716SM1		878SM1		SATELIS	500	2007-2012
SATELIS ABS	600	2004																SATELIS ABS	600	2004
PGO																		**PGO**		
BIG MAX (Rear Drum Model)	50	1994-2006				YA12FID	YA12FI							744SM1				BIG MAX (Rear Drum Model)	50	1994-2006
COMET	50	1992												702SM1				COMET	50	1992
GALAXY	50	1993												702SM1				GALAXY	50	1993
MEGA FIFTY	50	1999				YA12FID	YA12FI							702SM1				MEGA FIFTY	50	1999
PMS	50	1999				HO32FID	HO32FI							796SM1				PMS	50	1999
PMX	50	1997				YA12FID	YA12FI							744SM1				PMX	50	1997
T REX	50	1999				HO32FID	HO32FI							796SM1				T REX	50	1999
BIG MAX (Rear Drum Model)	80	1995-1996				YA12FID	YA12FI							744SM1				BIG MAX (Rear Drum Model)	80	1995-1996
PMS	110	1999				HO32FID	HO32FI							796SM1				PMS	110	1999
T REX	110	1999				HO32FID	HO32FI							796SM1				T REX	110	1999
T REX	125	1999												796SM1				T REX	125	1999
TORNADO	125	1996												744SM1				TORNADO	125	1996
T REX	150	2001												796SM1				T REX	150	2001
PIAGGIO																		**PIAGGIO**		
DIESIS	50	2001-2005												621SM1				DIESIS	50	2001-2005
FLY (Rear Drum Model)	50	2005-2013												888SM1				FLY (Rear Drum Model)	50	2005-2013
FREE	50	1995-2000				PI01FID	PI01FI							694SM1				FREE	50	1995-2000
FREE	50	2002												779SM1				FREE	50	2002
FREE DELIVERY	50	2000-2001												694SM1				FREE DELIVERY	50	2000-2001
LIBERTY (GRIMECA CALIPER) (2T)	50	1997-2010				WF8103	RF8119							808SM1				LIBERTY (GRIMECA CALIPER) (2T)	50	1997-2010
LIBERTY (heng tong caliper) (2T)	50	1997-2011				WF8103	RF8119							808SM1				LIBERTY (heng tong caliper) (2T)	50	1997-2011
LIBERTY 2T SPORT	50	2007-2008				WF8103	RF8119							808SM1				LIBERTY 2T SPORT	50	2007-2008
LIBERTY 4T (grimeca caliper)	50	2000-2009				WF8103	RF8119							808SM1				LIBERTY 4T (grimeca caliper)	50	2000-2009
LIBERTY 4T (heng tong caliper)	50	2000-2009				WF8103	RF8119							808SM1				LIBERTY 4T (heng tong caliper)	50	2000-2009
LIBERTY 4T DELIVERY TNT	50	2009				WF8103	RF8119											LIBERTY 4T DELIVERY TNT	50	2009
LIBERTY 4T SPORT	50	2007-2008				WF8103	RF8119							808SM1				LIBERTY 4T SPORT	50	2007-2008
NRG	50	1993-1995				AP11FID	AP11FI							761SM1				NRG	50	1993-1995
NRG	50	1996-2001				AP11FID	AP11FI							805SM1				NRG	50	1996-2001
NRG EXTREME (rear disc/freno disco post)	50	1999-2001												761SM1		808SM1		NRG EXTREME (rear disc/freno disco post)	50	1999-2001
NRG EXTREME (rear drum/freno tamburo)	50	1999-2001												761SM1				NRG EXTREME (rear drum/freno tamburo)	50	1999-2001
NRG MC2	50	1997				GL06FID	GL06FI							761SM1				NRG MC2	50	1997
NRG MC3 DD	50	2001-2004												761SM1		808SM1		NRG MC3 DD	50	2001-2004
NRG MC3 DD	50	2005												761SM1				NRG MC3 DD	50	2005
NRG MC3 DT	50	2001-2005												761SM1				NRG MC3 DT	50	2001-2005

* articolo in esaurimento / to be discontinued

SCOOTER

			DISCHI / DISKS								
			ANTERIORE / FRONT					POSTERIORE / REAR			
MODELLO / MODEL	CC	ANNO / YEAR	W-FLO	R-FLO	S3	W-FIX	R-FIX	W-FLO	S3	W-FIX	R-FIX
NRG POWER DD	50	2005-2013				WF8103	RF8119				
NRG POWER DT	50	2005-2011				WF8103	RF8119				
NRG POWER PUREJET	50	2004-2011				WF8103	RF8119				
NRG PUREJET	50	2004-2010				WF8103	RF8119				
NRG SILVER BULLETT	50	2010				WF8103	RF8119				
NTT	50	1994-1996				AP11FID	AP11FI				
QUARTZ (Rear Drum Model)	50	1991-1995				PI01FID	PI01FI				
SFERA ET2	50	1997				PI01FID	PI01FI				
SFERA RST	50	1995-2001				PI01FID	PI01FI				
TYPHOON	50	1993-1997				AP11FID	AP11FI				
TYPHOON (2T/12” WHEELS)	50	2010-2012									
TYPHOON 2T (GRIMECA CAL./10” WHEELS)	50	2000-2004				AP11FID	AP11FI				
TYPHOON 2T (HENG TONG CAL./10” WHEELS)	50	2001-2009				AP11FID	AP11FI				
TYPHOON X	50	1998-1999				AP11FID	AP11FI				
TYPHOON XR	50	2000				AP11FID	AP11FI				
VESPA ET2	50	1997-2005				PI01FID	PI01FI				
VESPA ET4	50	2001-2004				PI01FID	PI01FI				
VESPA LX 2T (Rear Drum Model)	50	2005-2013				PI01FID	PI01FI				
VESPA LX 4T (Rear Drum Model)	50	2005-2013				PI01FID	PI01FI				
VESPA LXV	50	2007-2009				WF8103	RF8119				
VESPA S 2T (Rear Drum Model)	50	2007-2013				PI01FID	PI01FI				
VESPA S 4T (Rear Drum Model)	50	2008-2013				PI01FID	PI01FI				
ZIP 2T (Rear Drum Model)	50	2000-2013									
ZIP 4T (Grim./HengTong cal. - Rear Drum)	50	2000-2013				GL06RID	GL06RI				
ZIP CAT DT 2T	50	2001-2005				GL06RID	GL06RI				
ZIP FAST RIDER 2T	50	1993-1995				YA12FID	YA12FI				
ZIP FAST RIDER 2T	50	1996-2000				YA12FID	YA12FI				
ZIP RST	50	1996-1999				YA12FID	YA12FI				
ZIP SP 2T (Rear Drum Model)	50	1996-2013				PI01FID	PI01FI				
SFERA	80	1991									
SKIPPER	80	1994-1995				PI01FID	PI01FI				
TYPHOON	80	1997-1998				AP11FID	AP11FI				
DIESIS	100	2001-2003									
FLY 4T	100	2007-2009									
FREE	100	2002									
ZIP	100	2007-2010									
BEVERLY (grimeca caliper)	125	2002-2006			S38009	PI04FID	PI04FI			PI04FID	PI04FI
BEVERLY (heng tong caliper)	125	2002-2007			S38009	PI04FID	PI04FI			PI04FID	PI04FI
BEVERLY RST 4T	125	2010-2013									
BEVERLY S	125	2007			S38009	PI04FID	PI04FI			PI04FID	PI04FI
BEVERLY TOURER	125	2008-2010			S38009	PI04FID	PI04FI			PI04FID	PI04FI
CARNABY	125	2007-2010				PI04FID	PI04FI			PI04FID	PI04FI
FLY (Rear Drum Model)	125	2005-2013									
HEXAGON	125	1993-1997				GL01RID	RF8510			GL01RID	RF8510
HEXAGON LX	125	1998-2001				PI01FID	PI01FI				
LIBERTY (Rear Drum Model)	125	1997-2002				WF8103	RF8119				
LIBERTY 4T (Rear Drum Model)	125	2007-2008				WF8103	RF8119				
LIBERTY 4T (Rear Drum Model)	125	2013				GL01RID	RF8510				
LIBERTY 4T DELIVERY (Rear Drum Model)	125	2008-2009				WF8103	RF8119				
LIBERTY 4T SPORT (Rear Drum Model)	125	2006-2008				WF8103	RF8119				
MP3	125	2007				WF8106	RF8127			PI03FID	PI03FI
MP3	125	2008				WF8106	RF8127			PI03FID	PI03FI
MP3 IBRIDO	125	2009-2010				WF8106	RF8127			PI03FID	PI03FI
MP3 IE	125	2008-2009				WF8106	RF8127			PI03FID	PI03FI
SFERA 4t	125	1996-2001				PI01FID	PI01FI				
SKIPPER	125	1993-1997				PI01FID	PI01FI				
SKIPPER LX	125	1998-2002				GL06FID	GL06FI				
SKIPPER ST 4T (grimeca caliper)	125	2000-2004				GL06FID	GL06FI				
SKIPPER ST 4T (heng tong caliper)	125	2000-2004				GL06FID	GL06FI				
SUPER HEXAGON GTX (12” WHEELS)	125	2001-2003				PI03FID	PI03FI				
SUPER HEXAGON GTX (grimeca caliper)	125	2000				PI01FID	PI01FI				
SUPER HEXAGON GTX (heng tong caliper)	125	2000				PI01FID	PI01FI			PI01FID	PI01FI
TYPHOON	125	1995-2000				AP11FID	AP11FI				
TYPHOON 4T (12” WHEELS)	125	2010-2011									
VESPA ET4	125	1996-2005				PI01FID	PI01FI				
VESPA GRANTURISMO (Grimeca caliper)	125	2003-2006				WF8103	RF8119			WF8103	RF8119

PASTIGLIE / PADS					LEVE / LEVERS	SCOOTER		
ANTERIORE / FRONT			POSTERIORE / REAR		ANTERIORE / FRONT			
CM55	P30	SM1	P30	SM1	LE	MODELLO / MODEL	CC	ANNO / YEAR
		702SM1		808SM1		NRG POWER DD	50	2005-2013
		702SM1				NRG POWER DT	50	2005-2011
		702SM1		808SM1		NRG POWER PUREJET	50	2004-2011
		702SM1		808SM1		NRG PUREJET	50	2004-2010
		702SM1		808SM1		NRG SILVER BULLETT	50	2010
		761SM1				NTT	50	1994-1996
		760SM1				QUARTZ (Rear Drum Model)	50	1991-1995
		805SM1				SFERA ET2	50	1997
		805SM1				SFERA RST	50	1995-2001
		761SM1				TYPHOON	50	1993-1997
		888SM1				TYPHOON (2T/12” WHEELS)	50	2010-2012
		761SM1				TYPHOON 2T (GRIMECA CAL./10” WHEELS)	50	2000-2004
		761SM1				TYPHOON 2T (HENG TONG CAL./10” WHEELS)	50	2001-2009
		761SM1				TYPHOON X	50	1998-1999
		761SM1				TYPHOON XR	50	2000
		808SM1				VESPA ET2	50	1997-2005
		808SM1				VESPA ET4	50	2001-2004
		808SM1				VESPA LX 2T (Rear Drum Model)	50	2005-2013
		808SM1				VESPA LX 4T (Rear Drum Model)	50	2005-2013
		808SM1				VESPA LXV	50	2007-2009
		808SM1				VESPA S 2T (Rear Drum Model)	50	2007-2013
		808SM1				VESPA S 4T (Rear Drum Model)	50	2008-2013
		808SM1				ZIP 2T (Rear Drum Model)	50	2000-2013
		808SM1				ZIP 4T (Grim./HengTong cal. - Rear Drum)	50	2000-2013
		805SM1				ZIP CAT DT 2T	50	2001-2005
		761SM1				ZIP FAST RIDER 2T	50	1993-1995
		808SM1				ZIP FAST RIDER 2T	50	1996-2000
		808SM1				ZIP RST	50	1996-1999
		808SM1				ZIP SP 2T (Rear Drum Model)	50	1996-2013
		805SM1				SFERA	80	1991
		760SM1				SKIPPER	80	1994-1995
		805SM1				TYPHOON	80	1997-1998
		621SM1				DIESIS	100	2001-2003
		888SM1				FLY 4T	100	2007-2009
		761SM1				FREE	100	2002
		808SM1				ZIP	100	2007-2010
		770SM1		770SM1		BEVERLY (grimeca caliper)	125	2002-2006
		888SM1		888SM1		BEVERLY (heng tong caliper)	125	2002-2007
		888SM1		953SM1		BEVERLY RST 4T	125	2010-2013
		888SM1		888SM1		BEVERLY S	125	2007
		888SM1		888SM1		BEVERLY TOURER	125	2008-2010
		888SM1		888SM1		CARNABY	125	2007-2010
		888SM1				FLY (Rear Drum Model)	125	2005-2013
		761SM1				HEXAGON	125	1993-1997
		770SM1				HEXAGON LX	125	1998-2001
		808SM1				LIBERTY (Rear Drum Model)	125	1997-2002
		808SM1				LIBERTY 4T (Rear Drum Model)	125	2007-2008
		888SM1				LIBERTY 4T (Rear Drum Model)	125	2013
		808SM1				LIBERTY 4T DELIVERY (Rear Drum Model)	125	2008-2009
		808SM1				LIBERTY 4T SPORT (Rear Drum Model)	125	2006-2008
						MP3	125	2007
		808SM1		909SM1		MP3	125	2008
						MP3 IBRIDO	125	2009-2010
						MP3 IE	125	2008-2009
		805SM1				SFERA 4t	125	1996-2001
		760SM1				SKIPPER	125	1993-1997
		770SM1				SKIPPER LX	125	1998-2002
		770SM1				SKIPPER ST 4T (grimeca caliper)	125	2000-2004
		888SM1				SKIPPER ST 4T (heng tong caliper)	125	2000-2004
		888SM1		871SM1		SUPER HEXAGON GTX (12” WHEELS)	125	2001-2003
		770SM1		871SM1		SUPER HEXAGON GTX (grimeca caliper)	125	2000
		888SM1		871SM1		SUPER HEXAGON GTX (heng tong caliper)	125	2000
		761SM1				TYPHOON	125	1995-2000
		888SM1				TYPHOON 4T (12” WHEELS)	125	2010-2011
		808SM1				VESPA ET4	125	1996-2005
				871SM1		VESPA GRANTURISMO (Grimeca caliper)	125	2003-2006

* articolo in esaurimento / to be discontinued

SCOOTER

			DISCHI / DISKS								
			ANTERIORE / FRONT					POSTERIORE / REAR			
MODELLO / MODEL	CC	ANNO / YEAR	W-FLO	R-FLO	S3	W-FIX	R-FIX	W-FLO	S3	W-FIX	R-FIX
VESPA GRANTURISMO (Heng Tong caliper)	125	2003-2007				WF8103	RF8119			WF8103	RF8119
VESPA GTS	125	2007-2011				WF8103	RF8119			WF8103	RF8119
VESPA GTS 4T SUPER	125	2009-2013				WF8103	RF8119			WF8103	RF8119
VESPA GTV 4T NAVY	125	2008				WF8103	RF8119				
VESPA LX (Rear Drum Model)	125	2005-2013				PI01FID	PI01FI				
VESPA LXV	125	2007-2012				WF8103	RF8119				
VESPA PX	125	1998-2000				PI01FID	PI01FI				
VESPA PX	125	2001-2011				PI01FID	PI01FI				
VESPA S (Rear Drum Model)	125	2007-2013				PI01FID	PI01FI				
VESPA S SPORT (Rear Drum Model)	125	2011-2013				PI01FID	PI01FI				
X EVO	125	2007-2012			S38009	PI04FID	PI04FI			PI03FID	PI03FI
X10	125	2012-2013									
X10 EXECUTIVE	125	2012-2013									RF8519
X7	125	2008-2009			S38009	PI04FID	PI04FI			PI03FID	PI03FI
X7 EVO	125	2009-2010			S38009	PI04FID	PI04FI			PI03FID	PI03FI
X8	125	2004			S38009	PI04FID	PI04FI			PI03FID	PI03FI
X8	125	2005-2006			S38009	PI04FID	PI04FI			PI03FID	PI03FI
X8 PREMIUM	125	2006-2007								PI03FID	PI03FI
X9	125	2000-2002				GL01RID	RF8510			GL01RID	RF8510
X9 EVOLUTION (brembo caliper)	125	2003-2004				GL01RID	RF8510			GL01RID	RF8510
X9 EVOLUTION (HENGTONG CALIPER)	125	2005-2007				GL01RID	RF8510			GL01RID	RF8510
ZIP 4T	125	2000-2004									
FLY (Rear Drum Model)	150	2005-2011									
HEXAGON	150	1994-1997									
LIBERTY 4t	150	2008				WF8103	RF8119				
LIBERTY 4T SPORT	150	2008				WF8103	RF8119				
LIBERTY LE	150	2000-2004									
SKIPPER	150	1993-1997				PI01FID	PI01FI				
SKIPPER LX	150	1998-2006				GL06FID	GL06FI				
SKIPPER LXT	150	1998-2006				GL06FID	GL06FI				
SKIPPER ST 4T (grimeca caliper)	150	2000-2004				GL06FID	GL06FI				
SKIPPER ST 4T (heng tong caliper)	150	2000-2004				GL06FID	GL06FI				
SUPER HEXAGON GTX	150	2000									
VESPA ET4	150	1999-2005				PI01FID	PI01FI				
VESPA LX	150	2005-2012				PI01FID	PI01FI				
VESPA PX (Rear Drum Model)	150	1998-2013				PI01FID	PI01FI				
VESPA S (Rear Drum Model)	150	2007-2012				PI01FID	PI01FI				
VESPA S SPORT (Rear Drum Model)	150	2011-2012				PI01FID	PI01FI				
X8 STREET	150	2006-2008			S38009	PI04FID	PI04FI				
HEXAGON LXT (Rear Drum Model)	180	1998-2001				PI01FID	PI01FI				
SUPER HEXAGON GTX (12" WHEELS)	180	2001-2003				PI03FID	PI03FI				
SUPER HEXAGON GTX (grimeca caliper)	180	2000				PI01FID	PI01FI			PI01FID	PI01FI
SUPER HEXAGON GTX (heng tong caliper)	180	2000				PI01FID	PI01FI			PI01FID	PI01FI
X9	180	2002-2007			S38009	PI04FID	PI04FI			PI04FID	PI04FI
X9 AMALFI	180	2000-2003				GL01RID	RF8510			GL01RID	RF8510
BEVERLY (grimeca caliper)	200	2002-2006			S38009	PI04FID	PI04FI			PI04FID	PI04FI
BEVERLY (heng tong caliper)	200	2002-2006			S38009	PI04FID	PI04FI			PI04FID	PI04FI
CARNABY	200	2007-2009				PI04FID	PI04FI			PI04FID	PI04FI
LIBERTY 4t	200	2005-2008				WF8103	RF8119				
LIBERTY 4T SPORT	200	2006-2008				WF8103	RF8119				
VESPA GT L GRANTURISMO (Grimeca cal.)	200	2003-2006				WF8103	RF8119			WF8103	RF8119
VESPA GT L GRANTURISMO (Heng Tong cal.)	200	2003-2006				WF8103	RF8119			WF8103	RF8119
VESPA PX	200	1998-2007				PI01FID	PI01FI				
X8	200	2004-2005			S38009	PI04FID	PI04FI			PI03FID	PI03FI
X8	200	2006-2007								PI03FID	PI03FI
X9	200	2002-2003				GL01RID	RF8510			GL01RID	RF8510
X9 AMALFI	200	2001-2002				GL01RID	RF8510			GL01RID	RF8510
X9 EVOLUTION	200	2003-2004				GL01RID	RF8510			GL01RID	RF8510
BEVERLY	250	2004-2007			S38009	PI04FID	PI04FI			PI04FID	PI04FI
BEVERLY CRUISER	250	2007-2009			S38009	PI04FID	PI04FI				
BEVERLY SPORT	250	2006-2008			S38009	PI04FID	PI04FI				
BEVERLY TOURER	250	2008-2009			S38009	PI04FID	PI04FI			PI04FID	PI04FI
CARNABY	250	2008-2009				PI04FID	PI04FI			PI04FID	PI04FI
HEXAGON GT	250	1998-2001				PI01FID	PI01FI				
HEXAGON GTX	250	1998-2000				PI01FID	PI01FI				
MP3	250	2006-2008				WF8106	RF8127			PI03FID	PI03FI

PASTIGLIE / PADS					LEVE / LEVERS			
ANTERIORE / FRONT			POSTERIORE / REAR		ANTERIORE / FRONT			
CM55	P30	SM1	P30	SM1	LE	MODELLO / MODEL	CC	ANNO / YEAR
		888SM1		871SM1		VESPA GRANTURISMO (Heng Tong caliper)	125	2003-2007
		888SM1		871SM1		VESPA GTS	125	2007-2011
		888SM1		871SM1		VESPA GTS 4T SUPER	125	2009-2013
		888SM1		871SM1		VESPA GTV 4T NAVY	125	2008
		808SM1				VESPA LX (Rear Drum Model)	125	2005-2013
		808SM1				VESPA LXV	125	2007-2012
		808SM1				VESPA PX	125	1998-2000
		760SM1				VESPA PX	125	2001-2011
		808SM1				VESPA S (Rear Drum Model)	125	2007-2013
		808SM1				VESPA S SPORT (Rear Drum Model)	125	2011-2013
		888SM1		953SM1		X EVO	125	2007-2012
		888SM1 / 953SM1		953SM1		X10	125	2012-2013
		888SM1 / 953SM1		953SM1		X10 EXECUTIVE	125	2012-2013
		888SM1		953SM1		X7	125	2008-2009
		888SM1				X7 EVO	125	2009-2010
		888SM1		828SM1		X8	125	2004
		888SM1		909SM1		X8	125	2005-2006
						X8 PREMIUM	125	2006-2007
		828SM1		828SM1		X9	125	2000-2002
		828SM1		828SM1		X9 EVOLUTION (brembo caliper)	125	2003-2004
		888SM1 / 953SM1		828SM1		X9 EVOLUTION (HENGTONG CALIPER)	125	2005-2007
		808SM1				ZIP 4T	125	2000-2004
		888SM1				FLY (Rear Drum Model)	150	2005-2011
		761SM1				HEXAGON	150	1994-1997
		808SM1				LIBERTY 4t	150	2008
		808SM1				LIBERTY 4T SPORT	150	2008
		808SM1				LIBERTY LE	150	2000-2004
		760SM1				SKIPPER	150	1993-1997
		770SM1				SKIPPER LX	150	1998-2006
						SKIPPER LXT	150	1998-2006
		770SM1				SKIPPER ST 4T (grimeca caliper)	150	2000-2004
		888SM1				SKIPPER ST 4T (heng tong caliper)	150	2000-2004
		770SM1		871SM1		SUPER HEXAGON GTX	150	2000
		808SM1				VESPA ET4	150	1999-2005
		808SM1				VESPA LX	150	2005-2012
		760SM1				VESPA PX (Rear Drum Model)	150	1998-2013
		808SM1				VESPA S (Rear Drum Model)	150	2007-2012
		808SM1				VESPA S SPORT (Rear Drum Model)	150	2011-2012
		888SM1				X8 STREET	150	2006-2008
		770SM1				HEXAGON LXT (Rear Drum Model)	180	1998-2001
		888SM1		871SM1		SUPER HEXAGON GTX (12" WHEELS)	180	2001-2003
		770SM1		871SM1		SUPER HEXAGON GTX (grimeca caliper)	180	2000
		888SM1		871SM1		SUPER HEXAGON GTX (heng tong caliper)	180	2000
						X9	180	2002-2007
		828SM1		828SM1		X9 AMALFI	180	2000-2003
		770SM1		770SM1		BEVERLY (grimeca caliper)	200	2002-2006
		888SM1		888SM1		BEVERLY (heng tong caliper)	200	2002-2006
		888SM1		888SM1		CARNABY	200	2007-2009
		808SM1				LIBERTY 4t	200	2005-2008
		808SM1				LIBERTY 4T SPORT	200	2006-2008
				871SM1		VESPA GT L GRANTURISMO (Grimeca cal.)	200	2003-2006
		888SM1		871SM1		VESPA GT L GRANTURISMO (Heng Tong cal.)	200	2003-2006
		760SM1				VESPA PX	200	1998-2007
		888SM1		828SM1		X8	200	2004-2005
						X8	200	2006-2007
		828SM1		828SM1		X9	200	2002-2003
						X9 AMALFI	200	2001-2002
		828SM1		828SM1		X9 EVOLUTION	200	2003-2004
		888SM1		888SM1		BEVERLY	250	2004-2007
		888SM1		888SM1		BEVERLY CRUISER	250	2007-2009
		888SM1		888SM1		BEVERLY SPORT	250	2006-2008
		888SM1		888SM1		BEVERLY TOURER	250	2008-2009
		888SM1		888SM1		CARNABY	250	2008-2009
		770SM1				HEXAGON GT	250	1998-2001
		770SM1				HEXAGON GTX	250	1998-2000
		808SM1		909SM1		MP3	250	2006-2008

* articolo in esaurimento / to be discontinued

SCOOTER			DISCHI / DISKS									PASTIGLIE / PADS					LEVE / LEVERS	SCOOTER		
			ANTERIORE / FRONT					POSTERIORE / REAR				ANTERIORE / FRONT			POSTERIORE / REAR		ANTERIORE / FRONT			
MODELLO / MODEL	CC	ANNO / YEAR	W-FLO	R-FLO	S3	W-FIX	R-FIX	W-FLO	S3	W-FIX	R-FIX	CM55	P30	SM1	P30	SM1	LE	MODELLO / MODEL	CC	ANNO / YEAR
MP3 LT	250	2009				WF8106	RF8127			PI03FID	PI03FI			808SM1		953SM1		MP3 LT	250	2009
MP3 MIC	250	2008-2009				WF8106	RF8127			PI03FID	PI03FI			808SM1		953SM1		MP3 MIC	250	2008-2009
SUPER HEXAGON GT-GTX	250	2000				PI01FID	PI01FI			PI01FID	PI01FI			770SM1		871SM1		SUPER HEXAGON GT-GTX	250	2000
VESPA GT 60	250	2006-2007				WF8103	RF8119			WF8103	RF8119			888SM1		871SM1		VESPA GT 60	250	2006-2007
VESPA GTS	250	2005-2013				WF8103	RF8119			WF8103	RF8119			888SM1		871SM1		VESPA GTS	250	2005-2013
VESPA GTS ABS	250	2005-2012				WF8103	RF8119			WF8103	RF8119			888SM1		871SM1		VESPA GTS ABS	250	2005-2012
VESPA GTV	250	2006-2009				WF8103	RF8119			WF8103	RF8119			888SM1		871SM1		VESPA GTV	250	2006-2009
VESPA GTV 4T NAVY	250	2008				WF8103	RF8119			WF8103	RF8119			888SM1		871SM1		VESPA GTV 4T NAVY	250	2008
X EVO	250	2007-2013			S38009	PI04FID	PI04FI			PI03FID	PI03FI			888SM1		953SM1		X EVO	250	2007-2013
X7	250	2008-2009			S38009	PI04FID	PI04FI			PI03FID	PI03FI			888SM1		953SM1		X7	250	2008-2009
X8	250	2005-2008			S38009	PI04FID	PI04FI			PI03FID	PI03FI			888SM1		909SM1		X8	250	2005-2008
X9	250	2000-2004				GL01RID	RF8510			GL01RID	RF8510			828SM1		828SM1		X9	250	2000-2004
X9	250	2005-2006				GL01RID	RF8510			GL01RID	RF8510			888SM1 / 953SM1		909SM1		X9	250	2005-2006
X9 EVOLUTION	250	2005-2006				GL01RID	RF8510			GL01RID	RF8510			888SM1 / 953SM1		909SM1		X9 EVOLUTION	250	2005-2006
BEVERLY	300	2011-2013	WH8102	RH8102						WF7521	RF7548			853SM1		953SM1		BEVERLY	300	2011-2013
BEVERLY TOURER	300	2009-2010			S38009	PI04FID	PI04FI				PI04FI			888SM1		888SM1		BEVERLY TOURER	300	2009-2010
CARNABY CRUISER	300	2009-2012			S38009	PI04FID	PI04FI			PI04FID	PI04FI			888SM1		888SM1		CARNABY CRUISER	300	2009-2012
MP3 IE LT	300	2010-2011				WF8106	RF8127			PI03FID	PI03FI			808SM1		953SM1		MP3 IE LT	300	2010-2011
MP3 IE MIC	300	2010				WF8106	RF8127			PI03FID	PI03FI							MP3 IE MIC	300	2010
MP3 LT	300	2010-2011				WF8106	RF8127							808SM1		953SM1		MP3 LT	300	2010-2011
MP3 LT IBRIDO	300	2010-2013				WF8106	RF8127			PI03FID	PI03FI			808SM1		953SM1		MP3 LT IBRIDO	300	2010-2013
MP3 MIC	300	2010				WF8106	RF8127							808SM1		953SM1		MP3 MIC	300	2010
VESPA GTS IE	300	2012-2014				WF8103	RF8119			WF8103	RF8119			888SM1		871SM1		VESPA GTS IE	300	2012-2014
VESPA GTS IE TOURING	300	2011				WF8103	RF8119			WF8103	RF8119			888SM1		871SM1		VESPA GTS IE TOURING	300	2011
VESPA GTS SUPER	300	2008-2013				WF8103	RF8119			WF8103	RF8119			888SM1		871SM1		VESPA GTS SUPER	300	2008-2013
VESPA GTS SUPER SPORT	300	2010-2013				WF8103	RF8119			WF8103	RF8119			888SM1		871SM1		VESPA GTS SUPER SPORT	300	2010-2013
VESPA GTV	300	2010-2013				WF8103	RF8119			WF8103	RF8119			888SM1		888SM1		VESPA GTV	300	2010-2013
X7 EVO	300	2009-2010			S38009	PI04FID	PI04FI			PI03FID	PI03FI			888SM1		953SM1		X7 EVO	300	2009-2010
X7 EVO	300	2011			S38009	PI04FID	PI04FI							888SM1		953SM1		X7 EVO	300	2011
BEVERLY SPORT TOURING	350	2011-2014												853SM1		953SM1		BEVERLY SPORT TOURING	350	2011-2014
X10	350	2012-2013		RH8103										888SM1 / 953SM1		953SM1		X10	350	2012-2013
X10 EXECUTIVE	350	2012-2013		RH8103							RF8519			888SM1 / 953SM1		953SM1		X10 EXECUTIVE	350	2012-2013
BEVERLY	400	2006-2007			S38009	PI04FID	PI04FI			PI03FID	PI03FI	746CM55		746SM1		888SM1		BEVERLY	400	2006-2007
BEVERLY TOURER	400	2008-2010			S38009	PI04FID	PI04FI			PI03FID	PI03FI			828SM1		828SM1		BEVERLY TOURER	400	2008-2010
MP3	400	2007-2008				WF8106	RF8127			PI03FID	PI03FI			808SM1		909SM1		MP3	400	2007-2008
MP3	400	2009												808SM1		909SM1		MP3	400	2009
MP3 IE LT	400	2008-2010				WF8106	RF8127			PI03FID	PI03FI					909SM1		MP3 IE LT	400	2008-2010
MP3 IE LT SPORT	400	2008-2010				WF8106	RF8127			PI03FID	PI03FI					909SM1		MP3 IE LT SPORT	400	2008-2010
MP3 LT	400	2008-2010				WF8106	RF8127			PI03FID	PI03FI			808SM1		909SM1		MP3 LT	400	2008-2010
MP3 LT SPORT	400	2008-2010				WF8106	RF8127			PI03FID	PI03FI			808SM1		909SM1		MP3 LT SPORT	400	2008-2010
MP3 MIC	400	2008-2009				WF8106	RF8127			PI03FID	PI03FI							MP3 MIC	400	2008-2009
X EVO	400	2007-2011				GL01RID	RF8510			PI03FID	PI03FI			888SM1 / 953SM1		888SM1		X EVO	400	2007-2011
X8	400	2006-2008				GL01RID	RF8510			PI03FID	PI03FI			888SM1 / 953SM1		888SM1		X8	400	2006-2008
BEVERLY	500	2002-2005			S38009	PI04FID	PI04FI			PI03FID	PI03FI			828SM1		828SM1		BEVERLY	500	2002-2005
BEVERLY	500	2006			S38009	PI04FID	PI04FI			PI03FID	PI03FI			828SM1		909SM1		BEVERLY	500	2006
BEVERLY	500	2007-2009			S38009	PI04FID	PI04FI			PI03FID	PI03FI			828SM1		828SM1		BEVERLY	500	2007-2009
BEVERLY CRUISER	500	2007-2012			S38009	PI04FID	PI04FI			PI03FID	PI03FI			828SM1		828SM1		BEVERLY CRUISER	500	2007-2012
FUOCO	500	2007								PI03FID	PI03FI							FUOCO	500	2007
MP3 EFI	500	2009-2010												808SM1		953SM1		MP3 EFI	500	2009-2010
X10 EXECUTIVE	500	2012-2013		RH8103							RF8519			888SM1 / 953SM1		953SM1		X10 EXECUTIVE	500	2012-2013
X9	500	2001-2002			S38009	PI04FID	PI04FI			PI03FID	PI03FI			828SM1		828SM1		X9	500	2001-2002
X9 EVOLUTION	500	2003-2007			S38009	PI04FID	PI04FI			PI03FID	PI03FI	746CM55		746SM1		828SM1		X9 EVOLUTION	500	2003-2007
X9 EVOLUTION ABS	500	2003										746CM55		746SM1		828SM1		X9 EVOLUTION ABS	500	2003
X9 EVOLUTION ABS	500	2006-2007			S38009	PI04FID	PI04FI			PI03FID	PI03FI	746CM55		746SM1		828SM1		X9 EVOLUTION ABS	500	2006-2007
SUZUKI																		SUZUKI		
ADDRESS AH	50	1991												702SM1				ADDRESS AH	50	1991
AN	50	1995												785SM1				AN	50	1995
AP	50	1994-1999												779SM1				AP	50	1994-1999
KATANA	50	1997-1999												778SM1				KATANA	50	1997-1999
SEPIA scooter	50	1992					SZ11FI							702SM1				SEPIA scooter	50	1992
TR STREET MAGIC	50	1998												785SM1				TR STREET MAGIC	50	1998
ZILLION	50	1999												778SM1				ZILLION	50	1999
ADDRESS CP	80	1992												702SM1				ADDRESS CP	80	1992
ADDRESS AH V	100	1991					SZ11FI							702SM1				ADDRESS AH V	100	1991
AN	125	1994												785SM1				AN	125	1994
BURGMAN	125	2002-2006					RF8123				RF8508	746CM55		746SM1		828SM1		BURGMAN	125	2002-2006

* articolo in esaurimento / to be discontinued

SCOOTER			DISCHI / DISKS									PASTIGLIE / PADS					LEVE / LEVERS	SCOOTER		
			ANTERIORE / FRONT					POSTERIORE / REAR				ANTERIORE / FRONT			POSTERIORE / REAR		ANTERIORE / FRONT			
MODELLO / MODEL	CC	ANNO / YEAR	W-FLO	R-FLO	S3	W-FIX	R-FIX	W-FLO	S3	W-FIX	R-FIX	CM55	P30	SM1	P30	SM1	LE	MODELLO / MODEL	CC	ANNO / YEAR
BURGMAN	125	2007-2012					RF8124				RF8124	910CM55	P30910	910SM1		862SM1		BURGMAN	125	2007-2012
BURGMAN	125	2013					RF8124				RF8124	910CM55	P30910	910SM1				BURGMAN	125	2013
BURGMAN	125	2014											P30725	725SM1		862SM1		BURGMAN	125	2014
BURGMAN ABS	125	2014											P30725	725SM1		862SM1		BURGMAN ABS	125	2014
SIXTEEN	125	2008-2011				WF8104	RF8121			WF8104	RF8121	910CM55	P30910	910SM1		862SM1		SIXTEEN	125	2008-2011
UC EPICURO	125	1999-2003					RF8125							785SM1				UC EPICURO	125	1999-2003
UE	125	2001												702SM1				UE	125	2001
VECSTAR	125	1994												785SM1				VECSTAR	125	1994
AN	150	1995												785SM1				AN	150	1995
BURGMAN	150	2002-2006					RF8123				RF8508	746CM55		746SM1		828SM1		BURGMAN	150	2002-2006
SIXTEEN	150	2008-2011				WF8104	RF8121			WF8104	RF8121	910CM55	P30910	910SM1		862SM1		SIXTEEN	150	2008-2011
UC EPICURO	150	1999-2001					RF8125							785SM1				UC EPICURO	150	1999-2001
UC EPICURO	150	2002												785SM1				UC EPICURO	150	2002
BURGMAN	200	2007-2013					RF8124				RF8124	910CM55	P30910	910SM1		862SM1		BURGMAN	200	2007-2013
BURGMAN	200	2014											P30725	725SM1		862SM1		BURGMAN	200	2014
BURGMAN ABS	200	2014											P30725	725SM1		862SM1		BURGMAN ABS	200	2014
BURGMAN	250	1998-2002			S38010		SZ24FI			SZ24RID	SZ24RI		P30830	830SM1		887SM1		BURGMAN	250	1998-2002
BURGMAN	250	2003-2006			S38012		SZ32FI						P30830	830SM1		887SM1		BURGMAN	250	2003-2006
BURGMAN	400	1999-2000			S38010		SZ24FI			SZ24RID	SZ24RI		P30830	830SM1	P30667	667SM1		BURGMAN	400	1999-2000
BURGMAN	400	2001-2002			S38010		SZ24FI			SZ24RID	SZ24RI		P30830	830SM1		887SM1		BURGMAN	400	2001-2002
BURGMAN	400	2003-2006			S38012		SZ32FI						P30830	830SM1		887SM1		BURGMAN	400	2003-2006
BURGMAN ABS	400	2011			S38012		SZ32FI			SZ42RID	SZ42RI		P30696 / P30725	696SM1 / 725SM1	P30896	896SM1		BURGMAN ABS	400	2011
BURGMAN ABS	400	2012-2013			S38012		SZ32FI			SZ42RID	SZ42RI		P30696 / P30725	696SM1 / 725SM1				BURGMAN ABS	400	2012-2013
BURGMAN twin disk	400	2006-2011			S38012		SZ32FI			SZ42RID	SZ42RI		P30696 / P30725	696SM1 / 725SM1	P30896	896SM1		BURGMAN twin disk	400	2006-2011
BURGMAN twin disk	400	2012			S38012		SZ32FI			SZ42RID	SZ42RI		P30696 / P30725	696SM1 / 725SM1				BURGMAN twin disk	400	2012
BURGMAN (4 fori / holes)	650	2002-2005			S38011	SZ30FID	RF8137			SZ33RID	RF8506	716CM55	P30716	716SM1	P30896	896SM1		BURGMAN (4 fori / holes)	650	2002-2005
BURGMAN (5 fori / holes)	650	2004-2012			S38012		SZ32FI			SZ35RID	RF8507	716CM55	P30716	716SM1	P30896	896SM1		BURGMAN (5 fori / holes)	650	2004-2012
BURGMAN ABS	650	2004-2012			S38012		SZ32FI			SZ35RID	RF8507	716CM55	P30716	716SM1	P30896	896SM1		BURGMAN ABS	650	2004-2012
BURGMAN ABS	650	2013-2014										716CM55	P30716		P30896	896SM1		BURGMAN ABS	650	2013-2014
BURGMAN ABS EXECUTIVE	650	2013-2014										716CM55	P30716		P30896	896SM1		BURGMAN ABS EXECUTIVE	650	2013-2014
SYM																		SYM		
CITY HOPPER	50	1999-2002												757SM1				CITY HOPPER	50	1999-2002
FIDDLE II	50	2008-2011												796SM1				FIDDLE II	50	2008-2011
JET 4	50	2010-2011												796SM1				JET 4	50	2010-2011
JET 4 R	50	2011												796SM1				JET 4 R	50	2011
JET BASIX	50	2006-2009												796SM1				JET BASIX	50	2006-2009
JET EURO X	50	2006-2010												796SM1				JET EURO X	50	2006-2010
JET EURO XS	50	1999-2005												796SM1				JET EURO XS	50	1999-2005
JET SPORT X	50	2006-2010												796SM1				JET SPORT X	50	2006-2010
JUNGLE	50	1999-2002												796SM1				JUNGLE	50	1999-2002
MASK	50	2000-2005												796SM1				MASK	50	2000-2005
ORBIT	50	2008-2009												757SM1				ORBIT	50	2008-2009
RED DEVIL	50	1999-2009												796SM1				RED DEVIL	50	1999-2009
SUPER FANCY	50	1996-2006												757SM1				SUPER FANCY	50	1996-2006
SYMPHONY	50	2009												796SM1				SYMPHONY	50	2009
SYMPHONY	50	2010-2011												796SM1		808SM1		SYMPHONY	50	2010-2011
SYMPHONY SR	50	2010-2012												796SM1		808SM1		SYMPHONY SR	50	2010-2012
SYMPLY	50	2007-2011												796SM1				SYMPLY	50	2007-2011
JET	100	1999-2000												796SM1				JET	100	1999-2000
JUNGLE	100	1999-2002												796SM1				JUNGLE	100	1999-2002
SR SUNRISE	100	1997												701SM1				SR SUNRISE	100	1997
ATTILA	125	1999-2000												796SM1				ATTILA	125	1999-2000
CEVALO	125	2010												720SM1				CEVALO	125	2010
CITY COM	125	2008-2010												796SM1				CITY COM	125	2008-2010
EURO MX	125	2002-2004				WF8102												EURO MX	125	2002-2004
FIDDLE II	125	2008-2011												796SM1				FIDDLE II	125	2008-2011
GTS JOYMAX	125	2006-2009												948SM1		948SM1		GTS JOYMAX	125	2006-2009
HD	125	2004-2007												869SM1				HD	125	2004-2007
HD EVO i	125	2007-2011												796SM1		948SM1		HD EVO i	125	2007-2011
HD S EVO	125	2007												796SM1				HD S EVO	125	2007
HD2	125	2010-2011												796SM1		948SM1		HD2	125	2010-2011
JET 4	125	2009-2011												796SM1				JET 4	125	2009-2011
JOYRIDE	125	2001-2002				WF8102				WF8503	RF8517					869SM1		JOYRIDE	125	2001-2002
JOYRIDE	125	2003-2004				WF8102										869SM1		JOYRIDE	125	2003-2004
JOYRIDE	125	2005-2006				WF8102												JOYRIDE	125	2005-2006
JOYRIDE	125	2007-2009				WF8102										948SM1		JOYRIDE	125	2007-2009

* articolo in esaurimento / to be discontinued

SCOOTER			DISCHI / DISKS									PASTIGLIE / PADS					LEVE / LEVERS	SCOOTER		
			ANTERIORE / FRONT					POSTERIORE / REAR				ANTERIORE / FRONT			POSTERIORE / REAR		ANTERIORE / FRONT			
MODELLO / MODEL	CC	ANNO / YEAR	W-FLO	R-FLO	S3	W-FIX	R-FIX	W-FLO	S3	W-FIX	R-FIX	CM55	P30	SM1	P30	SM1	LE	MODELLO / MODEL	CC	ANNO / YEAR
JOYRIDE EVO	125	2009-2013				WF8102										948SM1		JOYRIDE EVO	125	2009-2013
MEGALO	125	2000-2007												796SM1				MEGALO	125	2000-2007
ORBIT	125	2008-2009												757SM1				ORBIT	125	2008-2009
SHARK	125	1999-2002				WF8102												SHARK	125	1999-2002
SR	125	1998				H017FID	H017FI							796SM1				SR	125	1998
SUPER DUKE	125	1999-2002												796SM1				SUPER DUKE	125	1999-2002
SYMPHONY	125	2009												796SM1				SYMPHONY	125	2009
SYMPHONY	125	2010-2011												796SM1		808SM1		SYMPHONY	125	2010-2011
SYMPHONY SR	125	2010-2012												796SM1		808SM1		SYMPHONY SR	125	2010-2012
SYMPLY	125	2007-2008												796SM1				SYMPLY	125	2007-2008
SYMPLY II	125	2009-2011												796SM1				SYMPLY II	125	2009-2011
VOYAGER	125	2006-2009												948SM1		948SM1		VOYAGER	125	2006-2009
VS	125	2006-2008				WF8102												VS	125	2006-2008
DURO MX	150	2002-2004				WF8102												DURO MX	150	2002-2004
FIDDLE II	150	2008-2011												796SM1				FIDDLE II	150	2008-2011
JOYRIDE	150	2001-2002				WF8102				WF8503	RF8517					869SM1		JOYRIDE	150	2001-2002
SHARK	150	2000-2001				WF8102												SHARK	150	2000-2001
SUPER DUKE	150	1999-2002												796SM1				SUPER DUKE	150	1999-2002
SYMPHONY	150	2010-2011												796SM1		808SM1		SYMPHONY	150	2010-2011
SYMPHONY S	150	2010-2012												796SM1		808SM1		SYMPHONY S	150	2010-2012
SYMPHONY SR	150	2010-2012												796SM1		808SM1		SYMPHONY SR	150	2010-2012
VS	150	2007-2008				WF8102												VS	150	2007-2008
H 200 SE	200	2006												796SM1		948SM1		H 200 SE	200	2006
HD	200	2004-2007												869SM1				HD	200	2004-2007
HD EVO i	200	2007-2012												796SM1		948SM1		HD EVO i	200	2007-2012
HD S EVO	200	2007												796SM1		948SM1		HD S EVO	200	2007
HD2 i	200	2010-2011												796SM1		948SM1		HD2 i	200	2010-2011
JOYRIDE	200	2001-2006				WF8102				WF8503	RF8517					869SM1		JOYRIDE	200	2001-2006
JOYRIDE	200	2007-2009				WF8102				WF8503	RF8517					948SM1		JOYRIDE	200	2007-2009
JOYRIDE EVO	200	2009-2013				WF8102				WF8503	RF8517			963SM1		948SM1		JOYRIDE EVO	200	2009-2013
JOYMAX	250	2003-2009				WF8101	RF8138			WF8502	RF8516			883SM1		948SM1		JOYMAX	250	2003-2009
VOYAGER	250	2005												883SM1		868SM1		VOYAGER	250	2005
CITY COM 300i	300	2008-2011												796SM1		796SM1		CITY COM 300i	300	2008-2011
CITY MAX	300	2006												923SM1		948SM1		CITY MAX	300	2006
JOYMAX	300	2008-2009												883SM1		948SM1		JOYMAX	300	2008-2009
JOYMAX EVO	300	2009-2011											P30830	830SM1		948SM1		JOYMAX EVO	300	2009-2011
MAXSYM	400	2011				WF8511				WF8511		933CM55		933SM1		773SM1		MAXSYM	400	2011
MAXSYM	400	2012-2014				WF8511				WF8511						773SM1		MAXSYM	400	2012-2014
MAXSYM ABS	400	2012-2014				WF8511				WF8511						773SM1		MAXSYM ABS	400	2012-2014
TGB																		**TGB**		
303 R	50	1999												702SM1				303 R	50	1999
409 F	50	2000												702SM1				409 F	50	2000
AKROS	50	1995-1998												702SM1				AKROS	50	1995-1998
ERGON	50	1994												702SM1				ERGON	50	1994
303 R	125	1999												702SM1				303 R	125	1999
409 F	125	2002												702SM1				409 F	125	2002
409 F	150	2002												702SM1				409 F	150	2002
VILLA																		**VILLA**		
AX (Rear Drum Model)	50	1993				YA12FID	YA12FI							744SM1				AX (Rear Drum Model)	50	1993
GZ (Rear Drum Model)	50	1993				YA12FID	YA12FI							761SM1				GZ (Rear Drum Model)	50	1993
YAMAHA																		**YAMAHA**		
AEROX	50	1997-2014				H032FID	H032FI			H032FID	H032FI			761SM1		814SM1		AEROX	50	1997-2014
AXIS	50	1994-1996				YA12FID	YA12FI							761SM1				AXIS	50	1994-1996
BUMP	50	1997-2001				MB02FID	MB02FI							761SM1				BUMP	50	1997-2001
BW'S (Rear Drum Model)	50	1993-1998				YA12FID	YA12FI							761SM1				BW'S (Rear Drum Model)	50	1993-1998
BW'S (Rear Drum Model)	50	1999-2014				MB02FID	MB02FI							761SM1				BW'S (Rear Drum Model)	50	1999-2014
BW'S NAKED (Rear Drum Model)	50	2003-2004				MB02FID	MB02FI							761SM1				BW'S NAKED (Rear Drum Model)	50	2003-2004
BW'S NAKED (Rear Drum Model)	50	2009-2014				MB02FID	MB02FI							761SM1				BW'S NAKED (Rear Drum Model)	50	2009-2014
BW'S NEXT GENERATION	50	1996-1998				MB02FID	MB02FI							761SM1				BW'S NEXT GENERATION	50	1996-1998
CR TARGET	50	1991												744SM1				CR TARGET	50	1991
CR Z	50	1992-1995				YA12FID	YA12FI							744SM1				CR Z	50	1992-1995
JOG R (Rear Drum Model)	50	2002-2005				H032FID	H032FI											JOG R (Rear Drum Model)	50	2002-2005
JOG R (Rear Drum Model)	50	2006-2011				H032FID	H032FI							761SM1				JOG R (Rear Drum Model)	50	2006-2011
JOG Z	50	1991				YA12FID	YA12FI							779SM1				JOG Z	50	1991
NEO'S (Rear Drum Model)	50	1997-2006				AP11FID	AP11FI							761SM1				NEO'S (Rear Drum Model)	50	1997-2006

* articolo in esaurimento / to be discontinued

SCOOTER

			DISCHI / DISKS								
			ANTERIORE / FRONT					POSTERIORE / REAR			
MODELLO / MODEL	CC	ANNO / YEAR	W-FLO	R-FLO	S3	W-FIX	R-FIX	W-FLO	S3	W-FIX	R-FIX
NEO'S (Rear Drum Model)	50	2007-2014				H032FID	H032FI				
NEO'S 4T (Rear Drum Model)	50	2009-2014				H032FID	H032FI				
SLIDER	50	1999				H032FID	H032FI			H032FID	H032FI
SPY (Rear Drum Model)	50	1995-1998				MB02FID	MB02FI				
WHY	50	1999					H014FI				
YM BREEZE (Rear Drum Model)	50	1994-1998				YA12FID	YA12FI				
AEROX	100	2000-2002				H032FID	H032FI			H032FID	H032FI
NEO'S (Rear Drum Model)	100	2000-2002				AP11FID	AP11FI				
BW'S (Rear Drum Model)	125	2010-2011									
MAXTER	125	2001									
TEO'S	125	2000									
X-CITY	125	2008-2013				WF8105	RF8122			MB04RID	
X-MAX YP R	125	2006-2009	YA46FLD	RL8002	S38016		RF8116			YA46RID	RF8502
X-MAX YP R	125	2010-2013	YA46FLD	RL8002	S38016		RF8116			YA46RID	RF8502
X-MAX YP R	125	2014	YA45FLD	RL8002	S38016		RF8116			WF8512	RF8523
X-MAX YP R ABS	125	2011-2014	YA46FLD	RL8002	S38016		RF8116				
XC CYGNUS F	125	2000									
XC CYGNUS R/SV	125	1996-2002									
XC CYGNUS X	125	2005-2006									
XENTER (Rear Drum Model)	125	2012-2014				WF8115	RF8141				
YP MAJESTY	125	1998-2000				MB03FID	MB03FI				
YP MAJESTY	125	2001-2009				MB03FID	MB03FI				RF8509
TEO'S	150	2002									
XC FLY ONE	150	1994									
XENTER (Rear Drum Model)	150	2012-2013				WF8115	RF8141				
XQ MAXTER	150	2001									
YP MAJESTY	150	1998-2000				MB03FID	MB03FI				
YP MAJESTY	150	2001-2002				MB03FID	MB03FI				RF8509
YP MAJESTY	180	2003-2006				MB03FID	MB03FI				RF8509
X-CITY	250	2008-2014				WF8105	RF8122			YA46RID	RF8502
X-MAX YP R	250	2005-2009	YA46FLD	RL8002	S38016		RF8116			YA46RID	RF8502
X-MAX YP R	250	2010-2013	YA46FLD	RL8002	S38016		RF8116			YA46RID	RF8502
X-MAX YP R	250	2014	YA46FLD	RL8002	S38016		RF8116			WF8512	RF8523
X-MAX YP R ABS	250	2011-2014	YA46FLD	RL8002	S38016		RF8116				
X-MAX YP R SPORT	250	2011-2012	YA46FLD	RL8002	S38016		RF8116			YA46RID	RF8502
YP G GRAND MAJESTY [japan]	250	2004-2005	YA45FLD	RL8002	S38016		RF8116			YA48RID	YA48RI
YP MAJESTY (Rear Drum Model)	250	1996-1997				YA32FID	RF8135				
YP MAJESTY DX	250	1998-1999				YA32FID	RF8135			YA23RID	YA23RI
YP MAJESTY DX/ABS	250	1999				YA32FID	RF8135			YA23RID	YA23RI
YP MAJESTY DX/ABS	250	2000-2005				YA32FID	RF8135			YA32RID	YA32RI
XC	300	2004-2006				MB04FID	RF8136			MB04RID	
XC VERSITY	300	2003				MB04FID	RF8136			MB04RID	
X-MAX YP	400	2013-2014	YA45FLD / YA46FLD	RL8002	S38016		RF8116				RF8522
X-MAX YP ABS	400	2014	YA45FLD / YA46FLD	RL8002	S38016		RF8116				RF8522
YP MAJESTY	400	2004	YA45FLD	RL8002	S38020		RF8116			YA48RID	YA48RI
YP MAJESTY	400	2005-2011	YA45FLD / YA46FLD	RL8002	S38020		RF8116			YA48RID	YA48RI
YP MAJESTY	400	2012-2013	YA45FLD / YA46FLD	RL8002	S38020		RF8116			YA48RID	YA48RI
YP MAJESTY ABS	400	2007-2011	YA45FLD / YA46FLD	RL8002	S38020					YA48RID	YA48RI
YP MAJESTY ABS	400	2012-2013	YA45FLD / YA46FLD	RL8002	S38020					YA48RID	YA48RI
XP T-MAX	500	2001-2003			S38014	YA25FID	YA25FI			WF8501	RF8503
XP T-MAX	500	2004-2007	YA45FLD / YA46FLD	RL8002	S38016		RF8116			WF8501	RF8503
XP T-MAX	500	2008-2011	WL8001L / WL8001R	RL8001	S38017		RF8115			WF8501	RF8503
XP T-MAX ABS	500	2008-2011	WL8001L / WL8001R	RL8001	S38017		RF8115			WF8501	RF8503
XP T-MAX	530	2012-2014	YA45FLD / YA46FLD	RL8002	S38020		RF8116			WF8505	RF8512
XP T-MAX ABS	530	2012-2014	YA45FLD / YA46FLD	RL8002	S38020		RF8116			WF8505	RF8512

SCOOTER

PASTIGLIE / PADS					LEVE / LEVERS			
ANTERIORE / FRONT			POSTERIORE / REAR		ANTERIORE / FRONT			
CM55	P30	SM1	P30	SM1	LE	MODELLO / MODEL	CC	ANNO / YEAR
		761SM1				NEO'S (Rear Drum Model)	50	2007-2014
		761SM1				NEO'S 4T (Rear Drum Model)	50	2009-2014
		814SM1				SLIDER	50	1999
		761SM1				SPY (Rear Drum Model)	50	1995-1998
		761SM1				WHY	50	1999
		761SM1				YM BREEZE (Rear Drum Model)	50	1994-1998
		761SM1				AEROX	100	2000-2002
		761SM1				NEO'S (Rear Drum Model)	100	2000-2002
		961SM1				BW'S (Rear Drum Model)	125	2010-2011
746CM55		746SM1		828SM1		MAXTER	125	2001
		761SM1				TEO'S	125	2000
		720SM1		828SM1		X-CITY	125	2008-2013
		926SM1		828SM1		X-MAX YP R	125	2006-2009
		720SM1		828SM1		X-MAX YP R	125	2010-2013
	P30748	748SM1		828SM1		X-MAX YP R	125	2014
		720SM1	P30822	822SM1		X-MAX YP R ABS	125	2011-2014
		685SM1				XC CYGNUS F	125	2000
		685SM1				XC CYGNUS R/SV	125	1996-2002
		741SM1				XC CYGNUS X	125	2005-2006
		961SM1				XENTER (Rear Drum Model)	125	2012-2014
746CM55		746SM1				YP MAJESTY	125	1998-2000
746CM55		746SM1		828SM1		YP MAJESTY	125	2001-2009
		761SM1				TEO'S	150	2002
		685SM1				XC FLY ONE	150	1994
		961SM1				XENTER (Rear Drum Model)	150	2012-2013
746CM55		746SM1		828SM1		XQ MAXTER	150	2001
746CM55		746SM1				YP MAJESTY	150	1998-2000
746CM55		746SM1		828SM1		YP MAJESTY	150	2001-2002
746CM55		746SM1		828SM1		YP MAJESTY	180	2003-2006
	P30748	748SM1	P30822	822SM1		X-CITY	250	2008-2014
		926SM1	P30822	822SM1		X-MAX YP R	250	2005-2009
	P30748	748SM1	P30822	822SM1		X-MAX YP R	250	2010-2013
	P30748	748SM1		773SM1		X-MAX YP R	250	2014
	P30748	748SM1	P30822	822SM1		X-MAX YP R ABS	250	2011-2014
720CM55		720SM1	P30822	822SM1		X-MAX YP R SPORT	250	2011-2012
	P30750	750SM1	P30904	904SM1		YP G GRAND MAJESTY [japan]	250	2004-2005
777CM55	P30777	777SM1				YP MAJESTY (Rear Drum Model)	250	1996-1997
777CM55	P30777	777SM1	P30822	822SM1		YP MAJESTY DX	250	1998-1999
777CM55	P30777	777SM1	P30822	822SM1		YP MAJESTY DX/ABS	250	1999
777CM55	P30777	777SM1	P30822	822SM1		YP MAJESTY DX/ABS	250	2000-2005
720CM55		720SM1		746SM1		XC	300	2004-2006
746CM55		746SM1		746SM1		XC VERSITY	300	2003
	P30748	748SM1	P30822	822SM1		X-MAX YP	400	2013-2014
	P30748	748SM1	P30822	822SM1		X-MAX YP ABS	400	2014
	P30750	750SM1	P30904	904SM1		YP MAJESTY	400	2004
777CM55	P30777	777SM1	P30904	904SM1		YP MAJESTY	400	2005-2011
777CM55	P30777	777SM1	P30904	904SM1		YP MAJESTY	400	2012-2013
777CM55	P30777	777SM1	P30904	904SM1		YP MAJESTY ABS	400	2007-2011
777CM55	P30777	777SM1	P30904	904SM1		YP MAJESTY ABS	400	2012-2013
	P30750	750SM1		868SM1	LE1018* / LE1025* / LE2018* / LE2025*	XP T-MAX	500	2001-2003
777CM55	P30777	777SM1	P30904	904SM1	LE1018* / LE1025* / LE2018* / LE2025*	XP T-MAX	500	2004-2007
786CM55	P30786	786SM1	P30904	904SM1	LE1027* / LE1028*	XP T-MAX	500	2008-2011
786CM55	P30786	786SM1	P30904	904SM1	LE1027* / LE1028*	XP T-MAX ABS	500	2008-2011
786CM55	P30786	786SM1	P30904	904SM1	LE1027* / LE1028*	XP T-MAX	530	2012-2014
786CM55	P30786	786SM1	P30904	904SM1	LE1027* / LE1028*	XP T-MAX ABS	530	2012-2014

* articolo in esaurimento / to be discontinued

SUPERMOTARD			DISCHI / DISKS						PASTIGLIE / PADS					SUPPORTO PINZA / BRACKET CALIPER	LEVE / LEVERS	SUPERMOTARD		
			ANTERIORE / FRONT				POSTERIORE / REAR		ANTERIORE / FRONT			POSTERIORE / REAR		DISK Ø320	ANTERIORE / FRONT			
MODELLO MODEL	CC	ANNO YEAR	SK2	R-STX	W-FLO	W-FIX	W-FIX	R-FIX	CM66	CM55	SM1	CM56	SM1	Per pinza originale For Oem caliper	LE	MODELLO MODEL	CC	ANNO YEAR
APRILIA																**APRILIA**		
SX	50	2006-2010									770SM1		621SM1			SX	50	2006-2010
SX	125	2008-2013								746CM55	746SM1		669SM1			SX	125	2008-2013
SXV	450	2005-2011					AP22RID			931CM55			890SM1			SXV	450	2005-2011
SXV	550	2005-2011					AP22RID			931CM55			890SM1			SXV	550	2005-2011
DORSODURO	750	2008-2014	WK001L / WK001R	STX01						933CM55	933SM1	773CM56	773SM1			DORSODURO	750	2008-2014
DORSODURO FACTORY	750	2010-2011	WK001L / WK001R	STX01					784CM66	784CM55	784SM1	773CM56	773SM1			DORSODURO FACTORY	750	2010-2011
DORSODURO	1200	2011-2013	WK001L / WK001R	STX01			WF7521	RF7548	784CM66	784CM55		773CM56	773SM1			DORSODURO	1200	2011-2013
DORSODURO ABS	1200	2011-2012	WK001L / WK001R	STX01			WF7521	RF7548	784CM66	784CM55		773CM56	773SM1			DORSODURO ABS	1200	2011-2012
BETA																**BETA**		
RR MOTARD STANDARD	50	2009-2012									621SM1		890SM1			RR MOTARD STANDARD	50	2009-2012
RR MOTARD STANDARD	50	2013-2014									770SM1		890SM1			RR MOTARD STANDARD	50	2013-2014
RR SUPERMOTARD	50	1999-2003									741SM1		621SM1			RR SUPERMOTARD	50	1999-2003
RR SUPERMOTARD	50	2004-2005									621SM1		621SM1			RR SUPERMOTARD	50	2004-2005
RR SUPERMOTARD Alu	50	2004									770SM1					RR SUPERMOTARD Alu	50	2004
REV3	125	2000-2004									831SM1		831SM1			REV3	125	2000-2004
REV3	125	2005-2008									831SM1					REV3	125	2005-2008
RR SUPERMOTARD	125	2006-2014									770SM1		890SM1			RR SUPERMOTARD	125	2006-2014
REV3	200	2005-2008									831SM1					REV3	200	2005-2008
REV3	250	2000-2004									831SM1		831SM1			REV3	250	2000-2004
REV3	250	2005-2008									831SM1					REV3	250	2005-2008
REV3	270	2005-2008									831SM1					REV3	270	2005-2008
4.0 MOTARD	350	2003-2005											669SM1			4.0 MOTARD	350	2003-2005
DERBI																**DERBI**		
SENDA DRD EVO SM	50	2008-2011									828SM1		878SM1			SENDA DRD EVO SM	50	2008-2011
SENDA DRD RACING SM	50	2004-2010									770SM1		621SM1			SENDA DRD RACING SM	50	2004-2010
SENDA DRD RACING SM	50	2011-2013									770SM1		702SM1			SENDA DRD RACING SM	50	2011-2013
SENDA DRD SM	50	2003-2004									741SM1		621SM1			SENDA DRD SM	50	2003-2004
SENDA DRD SM	50	2005									621SM1		621SM1			SENDA DRD SM	50	2005
SENDA DRD X-TREME SM	50	2011-2012									828SM1		702SM1			SENDA DRD X-TREME SM	50	2011-2012
SENDA X-RACE SM	50	2006-2011									621SM1		621SM1			SENDA X-RACE SM	50	2006-2011
SENDA X-TREME SM	50	1999-2011									621SM1		621SM1			SENDA X-TREME SM	50	1999-2011
SENDA BAJA SM	125	2006-2012									770SM1		878SM1			SENDA BAJA SM	125	2006-2012
SENDA DRD SM	125	2010-2012									828SM1					SENDA DRD SM	125	2010-2012
SENDA SM 4t	125	2004-2007									770SM1		878SM1			SENDA SM 4t	125	2004-2007
DUCATI																**DUCATI**		
HYPERMOTARD 796	800	2010	WK097L / WK097R	STX97			DC05RID	DC05RI	784CM66	784CM55	784SM1	828CM56	828SM1		LE1032* / LE1039* / LE2032* / LE2039*	HYPERMOTARD 796	800	2010
HYPERMOTARD 796	800	2011-2012	WK097L / WK097R	STX97			DC05RID	DC05RI	784CM66	784CM55	784SM1	828CM56	828SM1			HYPERMOTARD 796	800	2011-2012
HYPERMOTARD	820	2013-2014	WK110L / WK110R	STX110			DC05RID	DC05RI		960CM55		828CM56	828SM1			HYPERMOTARD	820	2013-2014
HYPERMOTARD SP	820	2013-2014	WK110L / WK110R	STX110			DC05RID	DC05RI		960CM55		828CM56	828SM1			HYPERMOTARD SP	820	2013-2014
HYPERSTRADA	820	2013-2014	WK110L / WK110R	STX110			DC05RID	DC05RI		960CM55		828CM56	828SM1			HYPERSTRADA	820	2013-2014
HYPERMOTARD	1100	2007-2009	WK097L / WK097R	STX97			DC05RID	DC05RI	784CM66	784CM55	784SM1	828CM56	828SM1		LE1033* / LE1040* / LE2033* / LE2040*	HYPERMOTARD	1100	2007-2009
HYPERMOTARD EVO	1100	2010-2012	WK097L / WK097R	STX97			DC05RID	DC05RI	784CM66	784CM55	784SM1	828CM56	828SM1		LE1033* / LE1040* / LE2033* / LE2040*	HYPERMOTARD EVO	1100	2010-2012
HYPERMOTARD EVO SP	1100	2010-2012	WK097L / WK097R	STX97			DC05RID	DC05RI	930CM66	930CM55		828CM56	828SM1		LE1033* / LE1040* / LE2033* / LE2040*	HYPERMOTARD EVO SP	1100	2010-2012
HYPERMOTARD S	1100	2007-2009	WK097L / WK097R	STX97			DC05RID	DC05RI	930CM66	930CM55		828CM56	828SM1		LE1033* / LE1040* / LE2033* / LE2040*	HYPERMOTARD S	1100	2007-2009
HIGHLAND																**HIGHLAND**		
V2 MOTARD	950	2000								746CM55	746SM1	773CM56	773SM1			V2 MOTARD	950	2000
HONDA																**HONDA**		
XR SUPERMOTARD	50	2005									725SM1					XR SUPERMOTARD	50	2005
CRF M	250	2013											965SM1			CRF M	250	2013
XR SUPERMOTARD	400	2000-2005	WK050L	STX50			HO09RID	HO09RI			772SM1		701SM1	POW21		XR SUPERMOTARD	400	2000-2005
XR SUPERMOTARD	400	2006-2007					HO09RID	HO09RI		716CM55	716SM1		701SM1			XR SUPERMOTARD	400	2006-2007
XR SUPERMOTARD	650	2000-2008	WK050L	STX50			HO13RID				772SM1		701SM1	POW21		XR SUPERMOTARD	650	2000-2008
HONDA-HM																**HONDA-HM**		
CR E SUPERMOTARD	125	2000-2001	WK051L				HO25RID				772SM1		701SM1	POW21		CR E SUPERMOTARD	125	2000-2001
CR E SUPERMOTARD	125	2002-2003	WK051L				HO60RID / WF4508				772SM1		886SM1	POW21		CR E SUPERMOTARD	125	2002-2003
CR E SUPERMOTARD	125	2004-2008	WK051L				HO60RID / WF4508				772SM1		886SM1	POW83		CR E SUPERMOTARD	125	2004-2008
CR SUPERMOTARD	125	2004-2006									772SM1		886SM1			CR SUPERMOTARD	125	2004-2006
CRM R SUPERMOTO	125	2007							932CM66	932CM55			886SM1			CRM R SUPERMOTO	125	2007
CRF SUPERMOTARD	230	2004-2010					HO60RID / WF4508				772SM1		886SM1			CRF SUPERMOTARD	230	2004-2010
CR E SUPERMOTARD	250	2000-2001	WK051L				HO25RID				772SM1		701SM1	POW21		CR E SUPERMOTARD	250	2000-2001
CR E SUPERMOTARD	250	2002-2003	WK051L				HO60RID / WF4508				772SM1		886SM1	POW21		CR E SUPERMOTARD	250	2002-2003

* articolo in esaurimento / to be discontinued

SUPERMOTARD

			DISCHI / DISKS						PASTIGLIE / PADS					SUPPORTO PINZA / BRACKET CALIPER	LEVE / LEVERS			
			ANTERIORE / FRONT				POSTERIORE / REAR		ANTERIORE / FRONT			POSTERIORE / REAR		DISK Ø320	ANTERIORE / FRONT			
MODELLO MODEL	CC	ANNO YEAR	SK2	R-STX	W-FLO	W-FIX	W-FIX	R-FIX	CM66	CM55	SM1	CM56	SM1	Per pinza originale For Oem caliper	LE	MODELLO MODEL	CC	ANNO YEAR
CR E SUPERMOTARD	250	2004-2009	WK051L				HO60RID / WF4508				772SM1		886SM1	POW83		CR E SUPERMOTARD	250	2004-2009
CRF R SUPERMOTARD	250	2004-2008	WK051L				HO60RID / WF4508				772SM1		886SM1	POW83		CRF R SUPERMOTARD	250	2004-2008
CRF X SUPERMOTARD	250	2004-2008	WK051L				HO60RID / WF4508				772SM1		886SM1	POW83		CRF X SUPERMOTARD	250	2004-2008
CRM X SUPERMOTO	250	2007							932CM66	932CM55			886SM1			CRM X SUPERMOTO	250	2007
CRE F SUPERMOTO	450	2002-2003									772SM1		886SM1			CRE F SUPERMOTO	450	2002-2003
CRF SUPERMOTARD	450	2002-2003	WK051L				HO60RID / WF4508				772SM1		886SM1	POW21		CRF SUPERMOTARD	450	2002-2003
CRF X SUPERMOTARD	450	2004-2009	WK051L				HO60RID / WF4508				772SM1		886SM1	POW83		CRF X SUPERMOTARD	450	2004-2009
CRM F450R SUPERMOTO	450	2007-2009							932CM66	932CM55			886SM1			CRM F450R SUPERMOTO	450	2007-2009
CRM F450X SUPERMOTO	450	2007-2009							932CM66	932CM55			886SM1			CRM F450X SUPERMOTO	450	2007-2009
CRM F490X SUPERMOTO	490	2007							932CM66	932CM55			886SM1			CRM F490X SUPERMOTO	490	2007
HUSABERG																**HUSABERG**		
FS C	400	2001-2003	WK115L			KT02FID	KT11RID	KT11RI		746CM55	746SM1		773SM1	POW81		FS C	400	2001-2003
FS E	400	2001-2003	WK115L			KT02FID	KT11RID	KT11RI		746CM55	746SM1		773SM1	POW81		FS E	400	2001-2003
FS C	450	2003-2004	WK079L / WK115L				KT11RID	KT11RI		746CM55	746SM1		773SM1	POW81		FS C	450	2003-2004
FS C	450	2005-2008	WK079L				KT11RID	KT11RI		931CM55			773SM1			FS C	450	2005-2008
FS E	450	2003-2004	WK079L / WK115L				KT11RID	KT11RI		746CM55	746SM1		773SM1	POW81		FS E	450	2003-2004
FS E	450	2005-2008	WK079L				KT11RID	KT11RI		931CM55			773SM1			FS E	450	2005-2008
FE S	501	1999-2004	WK115L		WL103L / WL4007	KT02FID	KT11RID / WF4505	KT11RI		746CM55	746SM1	773CM56	773SM1	POW81		FE S	501	1999-2004
FS	570	2010	WK079L				KT11RID	KT11RI	932CM66	932CM55			891SM1			FS	570	2010
FE S	600	1999-2003	WK054L		WL103L		KT11RID / WF4505	KT11RI	688CM66	688CM55	688SM1	773CM56	773SM1			FE S	600	1999-2003
FS C	650	2001-2004	WK115L				KT11RID	KT11RI		746CM55	746SM1		773SM1	POW81		FS C	650	2001-2004
FS C	650	2005-2008	WK054L				KT11RID	KT11RI		931CM55			773SM1			FS C	650	2005-2008
FS E	650	2001-2004	WK115L				KT11RID	KT11RI		746CM55	746SM1		773SM1	POW81		FS E	650	2001-2004
FS E	650	2005-2008	WK054L				KT11RID	KT11RI		931CM55			773SM1			FS E	650	2005-2008
HUSQVARNA																**HUSQVARNA**		
SMR	449	2011-2012	WK087L				WF4501 / WF4506		870CM66	870CM55			891SM1			SMR	449	2011-2012
SMR	450	2003-2004	WK059L				HU09RID		688CM66	688CM55	688SM1	773CM56	773SM1			SMR	450	2003-2004
SMR	450	2005-2009	WK059L				HU09RID		870CM66	870CM55	870SM1	773CM56	773SM1			SMR	450	2005-2009
SMR	450	2010	WK059L				WF4501 / WF4506		870CM66	870CM55	870SM1	773CM56	773SM1			SMR	450	2010
SMR - RR	450	2006-2008	WK059L				WF4501 / WF4506		870CM66	870CM55	870SM1		891SM1			SMR - RR	450	2006-2008
SMR	510	2005	WK059L				HU09RID		870CM66	870CM55	870SM1	773CM56	773SM1			SMR	510	2005
SMR	510	2006-2010	WK059L				WF4501 / WF4506		870CM66	870CM55	870SM1	773CM56	773SM1			SMR	510	2006-2010
SMR	511	2011-2012	WK087L				WF4501 / WF4506		870CM66	870CM55			891SM1			SMR	511	2011-2012
NOX	570	2001-2003	WK059L						784CM66	784CM55	784SM1	773CM56	773SM1			NOX	570	2001-2003
SMR	570	2000-2004	WK059L				WF4510		688CM66	688CM55	688SM1	773CM56	773SM1			SMR	570	2000-2004
TE 610 E SUPERMOTARD	600	1998							784CM66	784CM55	784SM1	773CM56	773SM1			TE 610 E SUPERMOTARD	600	1998
SM	610	2005-2006	WK059L						870CM66	870CM55	870SM1	773CM56	773SM1			SM	610	2005-2006
SM S ie	610	2007-2008	WK059L						870CM66	870CM55	870SM1	773CM56	773SM1			SM S ie	610	2007-2008
SMR	630	2004-2005	WK059L				WF4510		784CM66	784CM55	784SM1	773CM56	773SM1			SMR	630	2004-2005
NUDA	900	2012-2013			WH7004		BW06RID	BW06RI		784CM55	784SM1	773CM56	773SM1			NUDA	900	2012-2013
NUDA R	900	2012-2013			WH7004		BW06RID	BW06RI	930CM66	930CM55		773CM56	773SM1			NUDA R	900	2012-2013
NUDA R ABS	900	2013			WH7004		BW06RID	BW06RI	930CM66	930CM55		773CM56	773SM1			NUDA R ABS	900	2013
KRAMIT																**KRAMIT**		
SMR	250	2000										773CM56	773SM1			SMR	250	2000
KTM																**KTM**		
SMR	450	2004	WK054L / WK079L		WL103L		KT11RID / WF4505	KT11RI	688CM66	688CM55	688SM1		891SM1			SMR	450	2004
SMR	450	2005-2006	WK054L / WK079L		WL103L		KT11RID / WF4505	KT11RI		931CM55			891SM1			SMR	450	2005-2006
SMR	450	2007-2013	WK054L / WK079L		WL103L		KT11RID / WF4505	KT11RI	932CM66	932CM55			891SM1			SMR	450	2007-2013
SMR	450	2014					KT11RID / WF4505	KT11RI	930CM66	930CM55			891SM1			SMR	450	2014
SMR	525	2004	WK054L		WL103L		KT11RID / WF4505	KT11RI	688CM66	688CM55	688SM1		891SM1			SMR	525	2004
SMR	525	2005	WK054L / WK079L		WL103L		KT11RID / WF4505	KT11RI		931CM55			891SM1			SMR	525	2005
SMR	560	2006-2008	WK079L				KT11RID / WF4505	KT11RI	932CM66	932CM55			891SM1			SMR	560	2006-2008
LC4 SUPERMOTO	620	1999-2001	WK115L		WL103L	KT02FID	KT11RID / WF4505	KT11RI		746CM55	746SM1	773CM56	773SM1	POW81		LC4 SUPERMOTO	620	1999-2001
LC4 SUPERMOTO	625	2002-2004	WK115L		WL103L		KT11RID / WF4505	KT11RI		746CM55	746SM1	773CM56	773SM1	POW81		LC4 SUPERMOTO	625	2002-2004
SMC	625	2005-2008	WK054L		WL103L		KT11RID / WF4505	KT11RI	784CM66	784CM55	784SM1	773CM56	773SM1			SMC	625	2005-2008
SMR	630	2004-2005							784CM66	784CM55	784SM1	773CM56	773SM1			SMR	630	2004-2005
LC4 SUPERMOTO	640	1998-1999	WK115L				KT11RID / WF4505	KT11RI		746CM55	746SM1	773CM56	773SM1			LC4 SUPERMOTO	640	1998-1999
LC4 SUPERMOTO	640	2000-2002	WK115L				KT11RID / WF4505	KT11RI		746CM55	746SM1	773CM56	773SM1	POW81		LC4 SUPERMOTO	640	2000-2002
LC4 SUPERMOTO	640	2003					KT11RID / WF4505	KT11RI	688CM66	688CM55	688SM1	773CM56	773SM1			LC4 SUPERMOTO	640	2003
LC4 SUPERMOTO	640	2004-2007					KT11RID / WF4505	KT11RI	784CM66	784CM55	784SM1	773CM56	773SM1			LC4 SUPERMOTO	640	2004-2007
SMC	660	2003	WK054L		WL103L		KT11RID / WF4505	KT11RI	688CM66	688CM55	688SM1	773CM56	773SM1			SMC	660	2003
SMC	660	2004-2007	WK054L		WL103L		KT11RID / WF4505	KT11RI	784CM66	784CM55	784SM1	773CM56	773SM1			SMC	660	2004-2007
SMC	690	2008-2011							870CM66	870CM55		773CM56	773SM1			SMC	690	2008-2011

* articolo in esaurimento / to be discontinued

SUPERMOTARD

			DISCHI / DISKS						PASTIGLIE / PADS					SUPPORTO PINZA / BRACKET CALIPER	LEVE / LEVERS			
			ANTERIORE / FRONT				POSTERIORE / REAR		ANTERIORE / FRONT			POSTERIORE / REAR		DISK Ø320	ANTERIORE / FRONT			
MODELLO MODEL	CC	ANNO YEAR	SK2	R-STX	W-FLO	W-FIX	W-FIX	R-FIX	CM66	CM55	SM1	CM56	SM1	Per pinza originale For Oem caliper	LE	MODELLO MODEL	CC	ANNO YEAR
SMC R	690	2012-2014	WK073L				KT10RID		870CM66	870CM55		773CM56	773SM1			SMC R	690	2012-2014
SUPERMOTO	690	2007-2008	WK054L		WL103L		KT10RID		784CM66	784CM55	784SM1	773CM56	773SM1			SUPERMOTO	690	2007-2008
SUPERMOTO PRESTIGE	690	2007-2008	WK073L / WK104L	STX73			KT10RID		870CM66	870CM55	870SM1		891SM1			SUPERMOTO PRESTIGE	690	2007-2008
SUPERMOTO R	690	2008	WK104L						870CM66	870CM55	870SM1		891SM1			SUPERMOTO R	690	2008
SUPERMOTO	950	2005-2007	WK112L / WK112R	STX112			KT09RID	RF7544	870CM66	870CM55			746SM1			SUPERMOTO	950	2005-2007
SUPERMOTO R	950	2006-2008	WK112L / WK112R	STX112			KT09RID	RF7544	870CM66	870CM55			746SM1			SUPERMOTO R	950	2006-2008
SM T	990	2009-2013	WK112L / WK112R	STX112			KT09RID	RF7544	870CM66	870CM55			746SM1			SM T	990	2009-2013
SUPERMOTO	990	2007-2012	WK112L / WK112R	STX112			KT09RID	RF7544	870CM66	870CM55			746SM1			SUPERMOTO	990	2007-2012
SUPERMOTO R	990	2010-2012	WK112L / WK112R	STX112			KT09RID	RF7544	930CM66	930CM55			746SM1			SUPERMOTO R	990	2010-2012
MBK																**MBK**		
X-LIMIT SUPERMOTO	50	2003-2010									770SM1		878SM1			X-LIMIT SUPERMOTO	50	2003-2010
RIEJU																**RIEJU**		
MRT PRO SUPERMOTARD	50	2009-2014									828SM1		702SM1			MRT PRO SUPERMOTARD	50	2009-2014
SHERCO																**SHERCO**		
4.5i 4T SM	450	2005-2010							870CM66	870CM55	870SM1		890SM1			4.5i 4T SM	450	2005-2010
SUZUKI																**SUZUKI**		
DR SM	125	2008-2012									772SM1		701SM1			DR SM	125	2008-2012
RM SM	125	2005-2006	WK055L													RM SM	125	2005-2006
SV SM	125	2005-2006									772SM1		701SM1			SV SM	125	2005-2006
SV SM (Italy)	125	2005-2006	WK055L											POW84		SV SM (Italy)	125	2005-2006
DRZ SM	400	2004									772SM1					DRZ SM	400	2004
DRZ SM	400	2005-2009	WK086L				SZ21RID				772SM1		701SM1			DRZ SM	400	2005-2009
TM																**TM**		
SMR	125	2005-2011			WL4014				688CM66	688CM55	688SM1		701SM1			SMR	125	2005-2011
SMM F	250	2010-2011							870CM66	870CM55	870SM1		890SM1			SMM F	250	2010-2011
SMR	250	2005-2011								688CM55	688SM1		890SM1			SMR	250	2005-2011
SMR F	250	2010-2011							870CM66	870CM55	870SM1		890SM1			SMR F	250	2010-2011
SMR	300	2005-2011								688CM55			890SM1			SMR	300	2005-2011
SMR F	400	2003							688CM66	688CM55	688SM1		701SM1			SMR F	400	2003
SMR F	450	2004-2009							688CM66	688CM55	688SM1		701SM1			SMR F	450	2004-2009
SMR F	450	2010-2011							870CM66	870CM55	870SM1		890SM1			SMR F	450	2010-2011
SMX F	450	2003							688CM66	688CM55	688SM1		701SM1			SMX F	450	2003
SMX F	450	2004-2011							870CM66	870CM55	870SM1		701SM1			SMX F	450	2004-2011
SMR F	530	2003-2009							688CM66	688CM55	688SM1		701SM1			SMR F	530	2003-2009
SMR F	530	2010-2011							870CM66	870CM55	870SM1		890SM1			SMR F	530	2010-2011
SMX F	530	2005-2011							870CM66	870CM55	870SM1		890SM1			SMX F	530	2005-2011
SMX F	600	2003							688CM66	688CM55	688SM1		701SM1			SMX F	600	2003
SMX F	660	2004-2010							870CM66	870CM55	870SM1		701SM1			SMX F	660	2004-2010
VOR																**VOR**		
SM	400	2000-2002							688CM66	688CM55	688SM1	773CM56	773SM1			SM	400	2000-2002
SM	503	2000-2002							784CM66	784CM55	784SM1	773CM56	773SM1			SM	503	2000-2002
YAMAHA																**YAMAHA**		
DT SM	50	2003-2004									694SM1		669SM1			DT SM	50	2003-2004
DT SM	50	2005-2006									770SM1		621SM1			DT SM	50	2005-2006
WR X	125	2009-2013			YA47FLD					716CM55	716SM1	773CM56				WR X	125	2009-2013
XT X SM	125	2005-2009									770SM1		878SM1			XT X SM	125	2005-2009
WR X	250	2008	WK021L / WK033L	STX21						716CM55	716SM1		890SM1			WR X	250	2008

CRUISER

			DISCHI / DISKS								PASTIGLIE / PADS							
			ANTERIORE / FRONT				POSTERIORE / REAR				ANTERIORE / FRONT			POSTERIORE / REAR				
MODELLO MODEL	CC	ANNO YEAR	SK2	HUMMER	R-FLO	R-FIX	HUMMER	R-FLO	W-FIX	R-FIX	CM77	CM55	SM1	CM88	SM1	MODELLO MODEL	CC	ANNO YEAR
HARLEY D.																**HARLEY D.**		
XL 883 L SPORTSTER LOW	883	2007-2013	WK106L	HD05FLD	HD01FL	HD01FI			WF3501 / WF7506		900CM77			901CM88		XL 883 L SPORTSTER LOW	883	2007-2013
XL 883 N IRON	883	2009-2013	WK106L	HD05FLD	HD01FL	HD01FI					900CM77			901CM88		XL 883 N IRON	883	2009-2013
XL 883 R ROADSTER	883	2010-2011	WK106L / WK106R	HD05FLD / HD09FLD	HD01FL	HD01FI			WF3501 / WF7506		900CM77			901CM88		XL 883 R ROADSTER	883	2010-2011
XL 883 R SPORTSTER	883	2000-2003	WK106L / WK106R	HD05FLD / HD09FLD	HD01FL	HD01FI			WF3501 / WF7506		843CM77			951CM88	951SM1	XL 883 R SPORTSTER	883	2000-2003
XL 883 R SPORTSTER R	883	2005-2013		HD05FLD / HD09FLD	HD01FL	HD01FI			WF3501 / WF7506		900CM77			901CM88		XL 883 R SPORTSTER R	883	2005-2013
XL 883 SPORTSTER CUSTOM	883	2004-2010	WK106L	HD05FLD / HD09FLD	HD01FL	HD01FI		HD01RL	WF7507	HD01RI	900CM77			901CM88		XL 883 SPORTSTER CUSTOM	883	2004-2010
XL SPORTSTER CUSTOM 53	883	2000-2003	WK106L	HD05FLD	HD01FL	HD01FI		HD01RL	WF7507	HD01RI	843CM77			951CM88	951SM1	XL SPORTSTER CUSTOM 53	883	2000-2003
XLH 883 SPORTSTER	883	1985-1999		HD03FLD	HDFFL	HD292R / HDF		HD292RFL / HD292SFL / HDRFL		HDR	732CM77		732SM1	734CM88	734SM1	XLH 883 SPORTSTER	883	1985-1999
XLH 883 SPORTSTER	883	2000-2003	WK106L	HD05FLD	HD01FL	HD01FI		HD01RL	WF7507	HD01RI	843CM77			951CM88	951SM1	XLH 883 SPORTSTER	883	2000-2003
XLH 883 SPORTSTER	883	2004-2006	WK106L	HD05FLD	HD01FL	HD01FI		HD01RL	WF7507	HD01RI	900CM77			901CM88		XLH 883 SPORTSTER	883	2004-2006
XLH 883 SPORTSTER HUGGER	883	2000-2003	WK106L	HD05FLD	HD01FL	HD01FI		HD01RL	WF7507	HD01RI	843CM77			951CM88	951SM1	XLH 883 SPORTSTER HUGGER	883	2000-2003
VRSCA V-ROD	1130	2002-2005						HD01RL	WF7507	HD01RI	843CM77			951CM88	951SM1	VRSCA V-ROD	1130	2002-2005
VRSCA V-ROD	1130	2006-2008				RF3105		RL3006		RF3503	934CM77					VRSCA V-ROD	1130	2006-2008
VRSCB V-ROD	1130	2004												951CM88	951SM1	VRSCB V-ROD	1130	2004
XL 1200 C SPORTSTER CUSTOM	1200	2004-2013	WK106L	HD05FLD	HD01FL	HD01FI		HD01RL	WF7507	HD01RI	900CM77			901CM88		XL 1200 C SPORTSTER CUSTOM	1200	2004-2013
XL 1200 L SPORTSTER LOW	1200	2007-2011	WK106L	HD05FLD	HD01FL	HD01FI			WF3501 / WF7506		900CM77			901CM88		XL 1200 L SPORTSTER LOW	1200	2007-2011
XL 1200 L SPORTSTER LOW	1200	2012-2013	WK106L	HD05FLD	HD01FL	HD01FI			WF3501 / WF7506		900CM77					XL 1200 L SPORTSTER LOW	1200	2012-2013
XL 1200 R SPORTSTER ROADSTER	1200	2004-2008	WK106L / WK106R	HD05FLD / HD09FLD	HD01FL	HD01FI		HD01RL	WF7507	HD01RI	900CM77			901CM88		XL 1200 R SPORTSTER ROADSTER	1200	2004-2008
XL 1200 S SPORT	1200	2000-2003	WK106L		HD01FL	HD01FI		HD01RL	WF7507	HD01RI	843CM77			951CM88	951SM1	XL 1200 S SPORT	1200	2000-2003
XL 1200 SPORTSTER - FORTY EIGHT	1200	2010-2011	WK106L	HD05FLD	HD01FL	HD01FI			WF7507	HD01RI	900CM77			901CM88		XL 1200 SPORTSTER - FORTY EIGHT	1200	2010-2011
XL 1200 SPORTSTER CUSTOM	1200	2000-2003												951CM88	951SM1	XL 1200 SPORTSTER CUSTOM	1200	2000-2003
XL 1200 SPORTSTER N NIGHTSTER	1200	2007-2013	WK106L	HD05FLD	HD01FL	HD01FI			WF3501 / WF7506		900CM77			901CM88		XL 1200 SPORTSTER N NIGHTSTER	1200	2007-2013
XL 1200 V - SEVENTY TWO	1200	2012-2013		HD05FLD	HD01FL	HD01FI			WF3501 / WF7506		900CM77			901CM88		XL 1200 V - SEVENTY TWO	1200	2012-2013
XL 1200 X - FORTY EIGHT	1200	2010-2013		HD05FLD	HD01FL	HD01FI			WF3501 / WF7506		900CM77			901CM88		XL 1200 X - FORTY EIGHT	1200	2010-2013
XLH 1200 SPORTSTER	1200	1987-1999		HD03FLD	HDFFL	HD292R / HDF		HD292RFL / HD292SFL / HDRFL		HDR	732CM77		732SM1	734CM88	734SM1	XLH 1200 SPORTSTER	1200	1987-1999
XLH 1200 SPORTSTER	1200	2000-2003	WK106L	HD05FLD	HD01FL	HD01FI		HD01RL	WF7507	HD01RI	843CM77			951CM88	951SM1	XLH 1200 SPORTSTER	1200	2000-2003
XR	1200	2008-2010	WK106L / WK106R	HD05FLD / HD09FLD	HD01FL	HD01FI			WF3501 / WF7506			827CM55	827SM1	901CM88		XR	1200	2008-2010
XR 1200 X	1200	2010-2012	WK106L / WK106R	HD05FLD / HD09FLD	HD01FL	HD01FI			WF3501 / WF7506			827CM55	827SM1	901CM88		XR 1200 X	1200	2010-2012
VRSCAW V-ROD	1250	2008-2010				RF3105		RL3006		RF3503	934CM77					VRSCAW V-ROD	1250	2008-2010
VRSCDX NIGHT ROD SPECIAL	1250	2007-2014				RF3105		RL3006		RF3503	934CM77					VRSCDX NIGHT ROD SPECIAL	1250	2007-2014
VRSCF V-ROD MUSCLE	1250	2008-2014				RF3105		RL3006		RF3503	934CM77					VRSCF V-ROD MUSCLE	1250	2008-2014
FLH 1340 83	1340	1989-1999									732CM77		732SM1	734CM88	734SM1	FLH 1340 83	1340	1989-1999
FLH 1340 ELECTRA GLIDE	1340	1982-1983		HD03FLD	HDFFL	HD292R / HDF	HD03RLD	HD292SFL / HDRFL		HDR						FLH 1340 ELECTRA GLIDE	1340	1982-1983
FLSTC 1340 HERITAGE SOFTAIL CLASSIC	1340	1989-1999		HD03FLD		HDF	HD03RLD	HD292SFL / HDRFL		HDR	732CM77		732SM1	734CM88	734SM1	FLSTC 1340 HERITAGE SOFTAIL CLASSIC	1340	1989-1999
FLSTC 1340 HERITAGE SOFTAIL CLASSIC	1340	2000-2002	WK106L	HD05FLD		HD01FI	HD05RLD		WF7507	HD01RI	732CM77		732SM1	734CM88	734SM1	FLSTC 1340 HERITAGE SOFTAIL CLASSIC	1340	2000-2002
FLSTC FAT BOY	1340	1989-1999		HD03FLD	HDFFL	HD292R / HDF	HD03RLD	HD292SFL / HDRFL		HDR	732CM77		732SM1	734CM88	734SM1	FLSTC FAT BOY	1340	1989-1999
FLSTC FAT BOY	1340	2000-2002	WK106L	HD05FLD		HD01FI	HD05RLD		WF7507	HD01RI	732CM77		732SM1	734CM88	734SM1	FLSTC FAT BOY	1340	2000-2002
FLSTC HERITAGE SOFTAIL CLASSIC	1340	1989-1999		HD03FLD	HDFFL	HD292R / HDF	HD03RLD	HD292RFL / HD292SFL / HDRFL		HDR	732CM77		732SM1	734CM88	734SM1	FLSTC HERITAGE SOFTAIL CLASSIC	1340	1989-1999
FLSTF FAT BOY	1340	1989-1999		HD03FLD	HDFFL	HD292R / HDF	HD03RLD	HD292SFL / HDRFL		HDR	732CM77		732SM1	734CM88	734SM1	FLSTF FAT BOY	1340	1989-1999
FXDWG DYNA WIDE GLIDE	1340	1993-1998									732CM77					FXDWG DYNA WIDE GLIDE	1340	1993-1998
FXLR 1340 LOW RIDER CUSTOM	1340	1987-1999		HD03FLD	HDFFL	HD292R / HDF	HD03RLD	HD292RFL / HD292SFL / HDRFL		HDR	732CM77		732SM1	734CM88	734SM1	FXLR 1340 LOW RIDER CUSTOM	1340	1987-1999
FXR 1340 SUPER GLIDE	1340	1982-1999		HD03FLD	HDFFL	HD292R / HDF	HD03RLD	HD292RFL / HD292SFL / HDRFL		HDR	732CM77		732SM1			FXR 1340 SUPER GLIDE	1340	1982-1999
FXRS 1340 LOW RIDER SPORT	1340	1987-1999		HD03FLD	HDFFL	HD292R / HDF	HD03RLD	HD292RFL / HD292SFL / HDRFL		HDR	732CM77		732SM1	734CM88	734SM1	FXRS 1340 LOW RIDER SPORT	1340	1987-1999
FXRS LOW RIDER SPORT EDITION	1340	1987-1999					HD03RLD									FXRS LOW RIDER SPORT EDITION	1340	1987-1999
FXRT 1340 SPORT GLIDE	1340	1987-1999		HD03FLD / HD07FLD	HDFFL	HD292R / HDF	HD03RLD	HD292RFL / HD292SFL / HDRFL		HDR	732CM77		732SM1	734CM88	734SM1	FXRT 1340 SPORT GLIDE	1340	1987-1999
FXSTC 1340 SOFTAIL CUSTOM	1340	1989-1999				HDF										FXSTC 1340 SOFTAIL CUSTOM	1340	1989-1999
FXSTC SOFTAIL CUSTOM	1340	1989-1993		HD03FLD	HDFFL	HD292R	HD03RLD	HD292RFL / HD292SFL / HDRFL		HDR	732CM77		732SM1	734CM88	734SM1	FXSTC SOFTAIL CUSTOM	1340	1989-1993
FXSTC SOFTAIL CUSTOM	1340	1994		HD03FLD			HD03RLD	HD292RFL / HD292SFL / HDFFL / HDRFL		HD292R / HDR	732CM77		732SM1	734CM88	734SM1	FXSTC SOFTAIL CUSTOM	1340	1994
FXSTC SOFTAIL CUSTOM	1340	1995-1999		HD03FLD	HDFFL	HD292R	HD03RLD	HD292RFL / HD292SFL / HDRFL		HDR	732CM77		732SM1	734CM88	734SM1	FXSTC SOFTAIL CUSTOM	1340	1995-1999
FXSTS 1340 SPRINGER SOFTAIL	1340	1989-1999		HD03FLD / HD07FLD	HDFFL	HD292R / HDF	HD03RLD	HD292RFL / HD292SFL / HDRFL		HDR	732CM77		732SM1	734CM88	734SM1	FXSTS 1340 SPRINGER SOFTAIL	1340	1989-1999
FLHR/I ROAD KING	1450	1998-1999		HD03FLD / HD07FLD	HDFFL	HD292R / HDF	HD03RLD	HD292RFL / HD292SFL / HDRFL		HDR	732CM77		732SM1	734CM88	734SM1	FLHR/I ROAD KING	1450	1998-1999
FLHR/I ROAD KING	1450	2000-2007	WK106L / WK106R	HD05FLD / HD09FLD	HD01FL	HD01FI	HD05RLD	HD01RL	WF7507	HD01RI	843CM77			951CM88	951SM1	FLHR/I ROAD KING	1450	2000-2007
FLHRCI ROAD KING CLASSIC	1450	2000-2006	WK106L / WK106R	HD05FLD / HD09FLD	HD01FL	HD01FI	HD05RLD	HD01RL	WF7507	HD01RI	843CM77			951CM88	951SM1	FLHRCI ROAD KING CLASSIC	1450	2000-2006
FLHRS/I ROAD KING CUSTOM	1450	2004-2006												951CM88	951SM1	FLHRS/I ROAD KING CUSTOM	1450	2004-2006
FLHT/I ELECTRA GLIDE STANDARD	1450	1998-1999		HD03FLD / HD07FLD	HDFFL	HD292R / HDF	HD03RLD	HD292SFL / HDRFL		HDR	732CM77		732SM1	734CM88	734SM1	FLHT/I ELECTRA GLIDE STANDARD	1450	1998-1999
FLHT/I ELECTRA GLIDE STANDARD	1450	2000-2006	WK106L / WK106R	HD05FLD / HD09FLD	HD01FL	HD01FI	HD05RLD	HD01RL	WF7507	HD01RI	843CM77			951CM88	951SM1	FLHT/I ELECTRA GLIDE STANDARD	1450	2000-2006
FLHTC ELECTRA GLIDE CLASSIC	1450	2000-2006												951CM88	951SM1	FLHTC ELECTRA GLIDE CLASSIC	1450	2000-2006
FLHTCUI ELECTRA GLIDE ULTRA CLASSIC	1450	2000-2006	WK106L / WK106R	HD05FLD / HD09FLD	HD01FL	HD01FI	HD05RLD	HD01RL	WF7507	HD01RI	843CM77			951CM88	951SM1	FLHTCUI ELECTRA GLIDE ULTRA CLASSIC	1450	2000-2006
FLSTC HERITAGE SOFTAIL CLASSIC	1450	2000	WK106L / WK106R	HD05FLD	HD01FL	HD01FI	HD05RLD	HD01RL	WF7507	HD01RI	732CM77		732SM1	734CM88	734SM1	FLSTC HERITAGE SOFTAIL CLASSIC	1450	2000
FLSTC HERITAGE SOFTAIL CLASSIC	1450	2001-2006	WK106L	HD05FLD	HD01FL	HD01FI	HD05RLD	HD01RL	WF7507	HD01RI	732CM77		732SM1	734CM88	734SM1	FLSTC HERITAGE SOFTAIL CLASSIC	1450	2001-2006
FLSTC/I HERITAGE SOFTAIL CLASSIC	1450	2000-2004												951CM88	951SM1	FLSTC/I HERITAGE SOFTAIL CLASSIC	1450	2000-2004
FLSTC/I SOFTAIL	1450	2005-2006												951CM88	951SM1	FLSTC/I SOFTAIL	1450	2005-2006
FLSTF FAT BOY	1450	2000-2006	WK106L	HD05FLD	HD01FL	HD01FI	HD05RLD	HD01RL	WF7507	HD01RI	843CM77			951CM88	951SM1	FLSTF FAT BOY	1450	2000-2006
FLSTF/I FAT BOY	1450	2003-2006	WK106L	HD05FLD			HD05RLD				843CM77			951CM88	951SM1	FLSTF/I FAT BOY	1450	2003-2006
FLSTI HERITAGE SOFTAIL	1450	2006												951CM88	951SM1	FLSTI HERITAGE SOFTAIL	1450	2006
FLSTN SOFTAIL DELUXE	1450	2005-2006												951CM88	951SM1	FLSTN SOFTAIL DELUXE	1450	2005-2006

CRUISER

			DISCHI / DISKS							
			ANTERIORE / FRONT				POSTERIORE / REAR			
MODELLO MODEL	CC	ANNO YEAR	SK2	HUMMER	R-FLO	R-FIX	HUMMER	R-FLO	W-FIX	R-FIX
FLSTS HERITAGE SPRINGER	1450	2000-2003	WK106L	HD05FLD	HD01FL	HD01FI	HD05RLD	HD01RL	WF7507	HD01RI
FLSTSC/I SPRINGER SOFTAIL CLASSIC	1450	2005-2006								
FLTR/I ROAD GLIDE	1450	1998-1999		HD03FLD / HD07FLD	HDFFL	HD292R / HDF	HD03RLD	HD292RFL / HD292SFL / HDRFL		HDR
FLTR/I ROAD GLIDE	1450	2000-2007	WK106L / WK106R	HD05FLD / HD09FLD	HD01FL	HD01FI	HD05RLD	HD01RL	WF7507	HD01RI
FXD DYNA SUPER GLIDE	1450	2000-2003	WK106L	HD05FLD / HD09FLD	HD01FL	HD01FI	HD05RLD	HD01RL	WF7507	HD01RI
FXD DYNA SUPER GLIDE	1450	2006-2007				RF3105	HD05RLD	HD01RL	WF7507	HD01RI
FXDB DYNA STREET BOB	1450	2006-2007				RF3104				RF3504
FXDC DYNA SUPER GLIDE CUSTOM	1450	2006-2007				RF3105	HD05RLD	HD01RL	WF7507	HD01RI
FXDI DYNA SUPER GLIDE	1450	2004-2006								
FXDI SUPER GLIDE	1450	2006								
FXDL DYNA LOW RIDER	1450	2000-2006	WK106L	HD05FLD	HD01FL	HD01FI	HD05RLD	HD01RL	WF7507	HD01RI
FXDS DYNA CONVERTIBLE	1450	2000-2002								
FXDWG DYNA WIDE GLIDE	1450	1993-1999		HD03FLD	HDFFL	HD292R / HDF	HD03RLD	HD292RFL / HD292SFL / HDRFL		HDR
FXDWG DYNA WIDE GLIDE	1450	2000-2005	WK106L	HD05FLD	HD01FL	HD01FI	HD05RLD	HD01RL	WF7507	HD01RI
FXDWG DYNA WIDE GLIDE	1450	2006-2007				RF3105	HD05RLD	HD01RL	WF7507	HD01RI
FXDX DYNA SUPER GLIDE T-SPORT	1450	2000-2005	WK106L / WK106R	HD05FLD / HD09FLD	HD01FL	HD01FI	HD05RLD	HD01RL	WF7507	HD01RI
FXDXT DYNA SUPER GLIDE T-SPORT	1450	2000-2003								
FXRS SPORT GLIDE	1450	1984-1986		HD03FLD	HDFFL	HD292R / HDF	HD03RLD	HD292RFL / HD292SFL / HDRFL		HDR
FXST SOFTAIL STANDARD	1450	2000	WK106L / WK106R	HD05FLD	HD01FL	HD01FI	HD05RLD	HD01RL	WF7507	HD01RI
FXST SOFTAIL STANDARD	1450	2001-2007	WK106L	HD05FLD	HD01FL	HD01FI	HD05RLD	HD01RL	WF7507	HD01RI
FXSTB/I NIGHT TRAIN	1450	2000-2007	WK106L	HD05FLD	HD01FL	HD01FI	HD05RLD	HD01RL	WF7507	HD01RI
FXSTD/I SOFTAIL DEUCE	1450	2000-2006	WK106L	HD05FLD	HD01FL	HD01FI	HD05RLD	HD01RL	WF7507	HD01RI
FXSTS/I SPRINGER SOFTAIL	1450	2000-2006	WK106L	HD05FLD	HD01FL	HD01FI		HD01RL	WF7507	HD01RI
FLHR/I ROAD KING	1584	2008-2010			RL3005	RF3104		RL3007		RF3504
FLHRC ROAD KING CLASSIC	1584	2007	WK106L / WK106R	HD05FLD / HD09FLD	HD01FL	HD01FI	HD05RLD	HD01RL	WF7507	HD01RI
FLHRC ROAD KING CLASSIC	1584	2008-2013			RL3005	RF3104		RL3007		RF3504
FLHRC ROAD KING CLASSIC	1584	2014								
FLHT/I ELECTRA GLIDE STANDARD	1584	2007	WK106L / WK106R	HD05FLD / HD09FLD	HD01FL	HD01FI	HD05RLD	HD01RL	WF7507	HD01RI
FLHT/I ELECTRA GLIDE STANDARD	1584	2008-2010			RL3005	RF3104		RL3007		RF3504
FLHTC ELECTRA GLIDE CLASSIC	1584	2007								
FLHTC ELECTRA GLIDE CLASSIC	1584	2008-2013			RL3005	RF3104		RL3007		RF3504
FLHTCU ELECTRA GLIDE ULTRA CLASSIC	1584	2007-2008	WK106L / WK106R	HD05FLD / HD09FLD	HD01FL	HD01FI	HD05RLD	HD01RL	WF7507	HD01RI
FLHTCU ELECTRA GLIDE ULTRA CLASSIC	1584	2009-2013			RL3005	RF3104		RL3007		RF3504
FLHX STREET GLIDE	1584	2006-2007	WK106L / WK106R	HD05FLD / HD09FLD	HD01FL	HD01FI	HD05RLD	HD01RL	WF7507	HD01RI
FLHX STREET GLIDE	1584	2008		HD09FLD	RL3005	RF3104		RL3007		RF3504
FLHX STREET GLIDE	1584	2009-2013			RL3005	RF3104		RL3007		RF3504
FLSTB FAT BOY SPECIAL	1584	2010-2013	WK106L	HD05FLD	HD01FL	HD01FI	HD05RLD	HD01RL	WF7507	HD01RI
FLSTB SOFTAIL CROSS BONES	1584	2008-2011	WK106L	HD05FLD	HD01FL	HD01FI	HD05RLD	HD01RL	WF7507	HD01RI
FLSTC HERITAGE SOFTAIL CLASSIC	1584	2007	WK106L	HD05FLD	HD01FL	HD01FI	HD05RLD	HD01RL	WF7507	HD01RI
FLSTC HERITAGE SOFTAIL CLASSIC	1584	2008-2014	WK106L	HD05FLD	HD01FL	HD01FI	HD05RLD	HD01RL	WF7507	HD01RI
FLSTF FAT BOY	1584	2007	WK106L	HD05FLD	HD01FL	HD01FI	HD05RLD	HD01RL	WF7507	HD01RI
FLSTF FAT BOY	1584	2008-2014	WK106L	HD05FLD	HD01FL	HD01FI	HD05RLD	HD01RL	WF7507	HD01RI
FLSTN SOFTAIL DELUXE	1584	2005-2006	WK106L	HD05FLD	HD01FL	HD01FI	HD05RLD	HD01RL	WF7507	HD01RI
FLSTN SOFTAIL DELUXE	1584	2007	WK106L	HD05FLD	HD01FL	HD01FI	HD05RLD	HD01RL	WF7507	HD01RI
FLSTN SOFTAIL DELUXE	1584	2008-2014	WK106L	HD05FLD	HD01FL	HD01FI	HD05RLD	HD01RL	WF7507	HD01RI
FLSTSC/I SOFTAIL	1584	2007								
FLSTSE CVO SOFTAIL CONVERTIBLE	1584	2010-2011	WK106L	HD05FLD	HD01FL	HD01FI	HD05RLD	HD01RL	WF7507	HD01RI
FLTR/I ROAD GLIDE	1584	2008-2009			RL3005	RF3104		RL3007		RF3504
FXCW ROCKER	1584	2008-2009	WK106L	HD05FLD	HD01FL	HD01FI	HD05RLD	HD01RL	WF7507	HD01RI
FXCWC ROCKER C	1584	2008-2013	WK106L	HD05FLD	HD01FL	HD01FI	HD05RLD	HD01RL	WF7507	HD01RI
FXD DYNA SUPER GLIDE	1584	2007								
FXD DYNA SUPER GLIDE	1584	2008-2010				RF3105	HD05RLD	HD01RL	WF7507	HD01RI
FXDB DYNA STREET BOB	1584	2007								
FXDB DYNA STREET BOB	1584	2008-2014				RF3104				RF3504
FXDC DYNA SUPER GLIDE CUSTOM	1584	2007								
FXDC DYNA SUPER GLIDE CUSTOM	1584	2008-2014				RF3105	HD05RLD	HD01RL	WF7507	HD01RI
FXDF FAT BOB	1584	2008-2014				RF3105	HD05RLD	HD01RL	WF7507	HD01RI
FXDL DYNA LOW RIDER	1584	2007				RF3105	HD05RLD	HD01RL	WF7507	HD01RI
FXDL DYNA LOW RIDER	1584	2008-2010				RF3105	HD05RLD	HD01RL	WF7507	HD01RI
FXDWG DYNA WIDE GLIDE	1584	2007								
FXDWG DYNA WIDE GLIDE	1584	2008-2014				RF3105	HD05RLD	HD01RL	WF7507	HD01RI
FXS BLACKLINE	1584	2011-2013	WK106L	HD05FLD	HD01FL	HD01FI	HD05RLD	HD01RL	WF7507	HD01RI
FXST SOFTAIL STANDARD	1584	2007								
FXSTB NIGHT TRAIN	1584	2008-2010	WK106L	HD05FLD	HD01FL	HD01FI	HD05RLD	HD01RL	WF7507	HD01RI
FXSTB/I NIGHT TRAIN	1584	2007								
FXSTC SOFTAIL CLASSIC	1584	2007								
FXSTC SOFTAIL CUSTOM	1584	2008-2010		HD05FLD	HD01FL	HD01FI / HD01RI	HD05RLD	HD01RL	WF7507	HD01RI
FXSTD/I SOFTAIL DEUCE	1584	2007								

CRUISER

PASTIGLIE / PADS							
ANTERIORE / FRONT			POSTERIORE / REAR				
CM77	CM55	SM1	CM88	SM1	MODELLO MODEL	CC	ANNO YEAR
732CM77		732SM1	951CM88	951SM1	FLSTS HERITAGE SPRINGER	1450	2000-2003
			951CM88	951SM1	FLSTSC/I SPRINGER SOFTAIL CLASSIC	1450	2005-2006
732CM77		732SM1	734CM88	734SM1	FLTR/I ROAD GLIDE	1450	1998-1999
843CM77			951CM88	951SM1	FLTR/I ROAD GLIDE	1450	2000-2007
843CM77			951CM88	951SM1	FXD DYNA SUPER GLIDE	1450	2000-2003
843CM77			951CM88	951SM1	FXD DYNA SUPER GLIDE	1450	2006-2007
843CM77			951CM88	951SM1	FXDB DYNA STREET BOB	1450	2006-2007
843CM77			951CM88	951SM1	FXDC DYNA SUPER GLIDE CUSTOM	1450	2006-2007
			951CM88	951SM1	FXDI DYNA SUPER GLIDE	1450	2004-2006
			951CM88	951SM1	FXDI SUPER GLIDE	1450	2006
843CM77			951CM88	951SM1	FXDL DYNA LOW RIDER	1450	2000-2006
			951CM88	951SM1	FXDS DYNA CONVERTIBLE	1450	2000-2002
732CM77		732SM1	734CM88	734SM1	FXDWG DYNA WIDE GLIDE	1450	1993-1999
			951CM88	951SM1	FXDWG DYNA WIDE GLIDE	1450	2000-2005
843CM77			951CM88	951SM1	FXDWG DYNA WIDE GLIDE	1450	2006-2007
843CM77			951CM88	951SM1	FXDX DYNA SUPER GLIDE T-SPORT	1450	2000-2005
			951CM88	951SM1	FXDXT DYNA SUPER GLIDE T-SPORT	1450	2000-2003
732CM77		732SM1	734CM88	734SM1	FXRS SPORT GLIDE	1450	1984-1986
843CM77			951CM88	951SM1	FXST SOFTAIL STANDARD	1450	2000
843CM77			951CM88	951SM1	FXST SOFTAIL STANDARD	1450	2001-2007
843CM77			951CM88	951SM1	FXSTB/I NIGHT TRAIN	1450	2000-2007
843CM77			951CM88	951SM1	FXSTD/I SOFTAIL DEUCE	1450	2000-2006
732CM77		732SM1	951CM88	951SM1	FXSTS/I SPRINGER SOFTAIL	1450	2000-2006
934CM77					FLHR/I ROAD KING	1584	2008-2010
					FLHRC ROAD KING CLASSIC	1584	2007
934CM77					FLHRC ROAD KING CLASSIC	1584	2008-2013
934CM77					FLHRC ROAD KING CLASSIC	1584	2014
843CM77			951CM88	951SM1	FLHT/I ELECTRA GLIDE STANDARD	1584	2007
934CM77					FLHT/I ELECTRA GLIDE STANDARD	1584	2008-2010
			951CM88	951SM1	FLHTC ELECTRA GLIDE CLASSIC	1584	2007
934CM77					FLHTC ELECTRA GLIDE CLASSIC	1584	2008-2013
843CM77			951CM88	951SM1	FLHTCU ELECTRA GLIDE ULTRA CLASSIC	1584	2007-2008
934CM77					FLHTCU ELECTRA GLIDE ULTRA CLASSIC	1584	2009-2013
843CM77			951CM88	951SM1	FLHX STREET GLIDE	1584	2006-2007
934CM77					FLHX STREET GLIDE	1584	2008
934CM77					FLHX STREET GLIDE	1584	2009-2013
943CM77			944CM88		FLSTB FAT BOY SPECIAL	1584	2010-2013
732CM77		732SM1	944CM88		FLSTB SOFTAIL CROSS BONES	1584	2008-2011
943CM77			951CM88	951SM1	FLSTC HERITAGE SOFTAIL CLASSIC	1584	2007
943CM77			944CM88		FLSTC HERITAGE SOFTAIL CLASSIC	1584	2008-2014
843CM77			951CM88	951SM1	FLSTF FAT BOY	1584	2007
943CM77			944CM88		FLSTF FAT BOY	1584	2008-2014
843CM77					FLSTN SOFTAIL DELUXE	1584	2005-2006
843CM77			951CM88	951SM1	FLSTN SOFTAIL DELUXE	1584	2007
943CM77			944CM88		FLSTN SOFTAIL DELUXE	1584	2008-2014
			951CM88	951SM1	FLSTSC/I SOFTAIL	1584	2007
					FLSTSE CVO SOFTAIL CONVERTIBLE	1584	2010-2011
					FLTR/I ROAD GLIDE	1584	2008-2009
943CM77			944CM88		FXCW ROCKER	1584	2008-2009
943CM77			944CM88		FXCWC ROCKER C	1584	2008-2013
			951CM88	951SM1	FXD DYNA SUPER GLIDE	1584	2007
943CM77			944CM88		FXD DYNA SUPER GLIDE	1584	2008-2010
			951CM88	951SM1	FXDB DYNA STREET BOB	1584	2007
943CM77			944CM88		FXDB DYNA STREET BOB	1584	2008-2014
			951CM88	951SM1	FXDC DYNA SUPER GLIDE CUSTOM	1584	2007
943CM77			944CM88		FXDC DYNA SUPER GLIDE CUSTOM	1584	2008-2014
943CM77			944CM88		FXDF FAT BOB	1584	2008-2014
843CM77					FXDL DYNA LOW RIDER	1584	2007
943CM77			944CM88		FXDL DYNA LOW RIDER	1584	2008-2010
			951CM88	951SM1	FXDWG DYNA WIDE GLIDE	1584	2007
943CM77			944CM88		FXDWG DYNA WIDE GLIDE	1584	2008-2014
943CM77			944CM88		FXS BLACKLINE	1584	2011-2013
			951CM88	951SM1	FXST SOFTAIL STANDARD	1584	2007
943CM77			944CM88		FXSTB NIGHT TRAIN	1584	2008-2010
			951CM88	951SM1	FXSTB/I NIGHT TRAIN	1584	2007
			951CM88	951SM1	FXSTC SOFTAIL CLASSIC	1584	2007
943CM77			944CM88		FXSTC SOFTAIL CUSTOM	1584	2008-2010
			951CM88	951SM1	FXSTD/I SOFTAIL DEUCE	1584	2007

CRUISER

			DISCHI / DISKS								PASTIGLIE / PADS							
			ANTERIORE / FRONT				POSTERIORE / REAR				ANTERIORE / FRONT			POSTERIORE / REAR				
MODELLO MODEL	CC	ANNO YEAR	SK2	HUMMER	R-FLO	R-FIX	HUMMER	R-FLO	W-FIX	R-FIX	CM77	CM55	SM1	CM88	SM1	MODELLO MODEL	CC	ANNO YEAR
FXSTSS CVO SOFTAIL SPRINGER	1584	2009	WK106L / WK106R	HD05FLD	HD01FL	HD01FI	HD05RLD	HD01RL	WF7507	HD01RI						FXSTSS CVO SOFTAIL SPRINGER	1584	2009
FLD SWITCHBACK	1690	2012-2014				RF3105	HD05RLD		WF7507	HD01RI	943CM77			944CM88		FLD SWITCHBACK	1690	2012-2014
FLHP ROAD KING POLICE	1690	2010-2011			RL3005	RF3104		RL3007		RF3504						FLHP ROAD KING POLICE	1690	2010-2011
FLHTK ELECTRA GLIDE ULTRA LIMITED	1690	2010-2013			RL3005	RF3104		RL3007		RF3504						FLHTK ELECTRA GLIDE ULTRA LIMITED	1690	2010-2013
FLHTP ELECTRA GLIDE POLICE	1690	2009-2011			RL3005	RF3104		RL3007		RF3504						FLHTP ELECTRA GLIDE POLICE	1690	2009-2011
FLHX STREET GLIDE	1690	2010-2013			RL3005	RF3104				RF3504	934CM77					FLHX STREET GLIDE	1690	2010-2013
FLHX STREET GLIDE	1690	2014									934CM77					FLHX STREET GLIDE	1690	2014
FLS SOFTAIL SLIM	1690	2012-2014		HD05FLD	HD01FL	HD01FI	HD05RLD	HD01RL	WF7507	HD01RI	943CM77			944CM88		FLS SOFTAIL SLIM	1690	2012-2014
FLTRU	1690	2011			RL3005	RF3104		RL3007		RF3504						FLTRU	1690	2011
FLTRUSE SCREAM EAGLE ROAD GLIDE	1690	2011			RL3005	RF3104		RL3007		RF3504						FLTRUSE SCREAM EAGLE ROAD GLIDE	1690	2011
FLTRX ROAD GLIDE CUSTOM	1690	2010-2013			RL3005	RF3104		RL3007		RF3504	934CM77					FLTRX ROAD GLIDE CUSTOM	1690	2010-2013
FLHTCUSE BLK ULTRA CLASSIC ELECTRA GLIDE	1800	2008-2013			RL3005	RF3104		RL3007		RF3504	943CM77					FLHTCUSE BLK ULTRA CLASSIC ELECTRA GLIDE	1800	2008-2013
FLHTCUSE BLK ULTRA CLASSIC ELECTRA GLIDE	1800	2014									943CM77					FLHTCUSE BLK ULTRA CLASSIC ELECTRA GLIDE	1800	2014
FLHTCUSE CVO ULTRA CLASSIC ELECTRA GLIDE	1800	2009-2013			RL3005	RF3104		RL3007		RF3504						FLHTCUSE CVO ULTRA CLASSIC ELECTRA GLIDE	1800	2009-2013
FLHXSE CVO STREET GLIDE	1800	2010-2011			RL3005	RF3104		RL3007		RF3504						FLHXSE CVO STREET GLIDE	1800	2010-2011
HONDA																**HONDA**		
VT C SHADOW (Rear Drum Model)	125	1999-2008				H007FI							725SM1			VT C SHADOW (Rear Drum Model)	125	1999-2008
VT C SHADOW	600	1988-1993											690SM1			VT C SHADOW	600	1988-1993
VT C SHADOW	600	1994-2007										716CM55	716SM1			VT C SHADOW	600	1994-2007
VT BLACK WIDOW (Rear Drum Model)	750	2001-2005				H023FI						720CM55	720SM1			VT BLACK WIDOW (Rear Drum Model)	750	2001-2005
VT C2 SHADOW A.C.E.	750	1997-2008				H023FI						716CM55	716SM1			VT C2 SHADOW A.C.E.	750	1997-2008
VT S (Rear Drum Model)	750	2011-2013				H023FI						720CM55	720SM1			VT S (Rear Drum Model)	750	2011-2013
VT SHADOW (Rear Drum Model)	750	1997-2009				H023FI						720CM55	720SM1			VT SHADOW (Rear Drum Model)	750	1997-2009
VT SHADOW	800	1988-1990											654SM1			VT SHADOW	800	1988-1990
VT SHADOW	1100	1988-1991											654SM1			VT SHADOW	1100	1988-1991
VT SHADOW	1100	1992-1995			H026FL							720CM55	720SM1			VT SHADOW	1100	1992-1995
VT SHADOW ACE-AERO-C2-C3	1100	1995-1998			H026FL					H031RI		716CM55	716SM1		742SM1	VT SHADOW ACE-AERO-C2-C3	1100	1995-1998
VT CX	1300	2010-2012										720CM55			742SM1	VT CX	1300	2010-2012
VT CX ABS	1300	2010-2011										910CM55			742SM1	VT CX ABS	1300	2010-2011
GOLD WING F6B	1800	2013-2014										827CM55				GOLD WING F6B	1800	2013-2014
GOLD WING F6C	1800	2014										827CM55				GOLD WING F6C	1800	2014
KAWASAKI																**KAWASAKI**		
VN	750	1989-1990											662SM1		680SM1	VN	750	1989-1990
VN	800	1994-1998											662SM1		662SM1	VN	800	1994-1998
VN	800	1999-2006										782CM55	782SM1			VN	800	1999-2006
VN CLASSIC	900	2006-2014										782CM55	782SM1		787SM1	VN CLASSIC	900	2006-2014
VN CUSTOM	900	2007-2011										782CM55			787SM1	VN CUSTOM	900	2007-2011
VN	1500	1987-1996											662SM1		662SM1	VN	1500	1987-1996
VN CLASSIC	1500	1996-2007										782CM55			662SM1	VN CLASSIC	1500	1996-2007
VN CLASSIC TOURER	1500	1998										782CM55 / 787CM55			662SM1	VN CLASSIC TOURER	1500	1998
VN DRIFTER	1500	1999-2002										782CM55	782SM1		787SM1	VN DRIFTER	1500	1999-2002
VN MEAN STREAK	1500	2002-2003	WK009L / WK009R									764CM55	764SM1		787SM1	VN MEAN STREAK	1500	2002-2003
VN VULCAN NOMAD	1500	1998-2001										782CM55 / 787CM55	782SM1 / 787SM1		662SM1	VN VULCAN NOMAD	1500	1998-2001
VN CLASSIC	1600	2003-2007										782CM55 / 787CM55			787SM1	VN CLASSIC	1600	2003-2007
VN CLASSIC TOURER	1600	2005-2006										782CM55			787SM1	VN CLASSIC TOURER	1600	2005-2006
VN MEAN STREAK	1600	2004-2005										764CM55	764SM1		787SM1	VN MEAN STREAK	1600	2004-2005
VN MEAN STREAK	1600	2006-2007										893CM55			787SM1	VN MEAN STREAK	1600	2006-2007
VN CLASSIC	1700	2009										782CM55 / 787CM55			787SM1	VN CLASSIC	1700	2009
VN CLASSIC ABS	1700	2010-2014										782CM55 / 787CM55			787SM1	VN CLASSIC ABS	1700	2010-2014
VN CLASSIC TOURER	1700	2009										782CM55 / 787CM55			787SM1	VN CLASSIC TOURER	1700	2009
VN CLASSIC TOURER ABS	1700	2010-2014										782CM55 / 787CM55			787SM1	VN CLASSIC TOURER ABS	1700	2010-2014
VN VOYAGER ABS	1700	2009-2014										715CM55			787SM1	VN VOYAGER ABS	1700	2009-2014
VN VOYAGER CUSTOM ABS	1700	2011-2014										715CM55			787SM1	VN VOYAGER CUSTOM ABS	1700	2011-2014
VN	2000	2004-2007										715CM55	715SM1		787SM1	VN	2000	2004-2007
VN CLASSIC	2000	2008-2010										715CM55	715SM1		787SM1	VN CLASSIC	2000	2008-2010
KYMCO																**KYMCO**		
ZING (Rear Drum Model)	125	1997-2002											725SM1			ZING (Rear Drum Model)	125	1997-2002
ZING (Rear Drum Model)	150	1997-2002											725SM1			ZING (Rear Drum Model)	150	1997-2002
VENOX (Rear Drum Model)	250	2000-2014										720CM55	720SM1			VENOX (Rear Drum Model)	250	2000-2014
MOTO GUZZI																**MOTO GUZZI**		
CUSTOM	125	1990											612SM1			CUSTOM	125	1990
SUZUKI																**SUZUKI**		
GZ MARAUDER (Rear Drum Model)	125	1998-2010											817SM1			GZ MARAUDER (Rear Drum Model)	125	1998-2010
VL INTRUDER	125	2000-2001											817SM1			VL INTRUDER	125	2000-2001
VL INTRUDER	250	2000-2001											817SM1			VL INTRUDER	250	2000-2001
VS GL INTRUDER	600	1997-2005			SZ15FL								680SM1			VS GL INTRUDER	600	1997-2005

CRUISER

			DISCHI / DISKS								PASTIGLIE / PADS							
			ANTERIORE / FRONT				POSTERIORE / REAR				ANTERIORE / FRONT			POSTERIORE / REAR				
MODELLO MODEL	CC	ANNO YEAR	SK2	HUMMER	R-FLO	R-FIX	HUMMER	R-FLO	W-FIX	R-FIX	CM77	CM55	SM1	CM88	SM1	MODELLO MODEL	CC	ANNO YEAR
VS GL INTRUDER	750	1985-1986			SZ15FL								680SM1			VS GL INTRUDER	750	1985-1986
VS GL INTRUDER	750	1987-1991											680SM1			VS GL INTRUDER	750	1987-1991
VS GLP INTRUDER	750	1986-1991											680SM1			VS GLP INTRUDER	750	1986-1991
BOULEVARD	800	2005-2007										787CM55	787SM1			BOULEVARD	800	2005-2007
C INTRUDER	800	2005										787CM55	787SM1			C INTRUDER	800	2005
M INTRUDER	800	2005-2014										787CM55				M INTRUDER	800	2005-2014
M INTRUDER T	800	2014										787CM55				M INTRUDER T	800	2014
VL LC INTRUDER VOLUSIA	800	2001-2005										787CM55	787SM1			VL LC INTRUDER VOLUSIA	800	2001-2005
VS GL INTRUDER	800	1991-1999			SZ15FL								680SM1			VS GL INTRUDER	800	1991-1999
VZ MARAUDER	800	1996-2004										787CM55	787SM1			VZ MARAUDER	800	1996-2004
VS GL INTRUDER	1400	1987-2004			SZ15FL					SZ15RI			680SM1		680SM1	VS GL INTRUDER	1400	1987-2004
VS GLP INTRUDER	1400	1987-2004			SZ15FL					SZ15RI			680SM1		680SM1	VS GLP INTRUDER	1400	1987-2004
BOULEVARD	1500	2005-2006										782CM55 / 787CM55	782SM1 / 787SM1			BOULEVARD	1500	2005-2006
C INTRUDER	1500	2005-2009										782CM55 / 787CM55				C INTRUDER	1500	2005-2009
VL INTRUDER CT	1500	2013-2014										720CM55				VL INTRUDER CT	1500	2013-2014
VL INTRUDER LC	1500	1998-2001											680SM1		680SM1	VL INTRUDER LC	1500	1998-2001
VL INTRUDER LC	1500	2002-2004										782CM55 / 787CM55	782SM1 / 787SM1			VL INTRUDER LC	1500	2002-2004
BOULEVARD	1600	2005-2006										893CM55			787SM1	BOULEVARD	1600	2005-2006
M INTRUDER	1600	2005-2006										893CM55			787SM1	M INTRUDER	1600	2005-2006
VZ MARAUDER	1600	2004-2006										764CM55	764SM1		787SM1	VZ MARAUDER	1600	2004-2006
VLR INTRUDER C	1800	2008-2011										910CM55			787SM1	VLR INTRUDER C	1800	2008-2011
VZR INTRUDER M	1800	2006-2012										898CM55			787SM1	VZR INTRUDER M	1800	2006-2012
TRIUMPH																**TRIUMPH**		
AMERICA	865	2007-2009										716CM55	716SM1		696SM1	AMERICA	865	2007-2009
AMERICA	865	2010-2013	WK124L									716CM55	716SM1		696SM1	AMERICA	865	2010-2013
LEGEND TT	900	1998-2000	WK129L									716CM55	716SM1		720SM1	LEGEND TT	900	1998-2000
THUNDERBIRD	900	1995-1999	WK129L									720CM55	720SM1		720SM1	THUNDERBIRD	900	1995-1999
THUNDERBIRD	900	2000-2003										720CM55	720SM1		720SM1	THUNDERBIRD	900	2000-2003
THUNDERBIRD SPORT	900	1996-2004	WK128L / WK128R		RL7008							720CM55	720SM1		720SM1	THUNDERBIRD SPORT	900	1996-2004
THUNDERBIRD	1600	2009-2014										707CM55			780SM1	THUNDERBIRD	1600	2009-2014
THUNDERBIRD COMMANDER	1700	2014										707CM55			780SM1	THUNDERBIRD COMMANDER	1700	2014
THUNDERBIRD LT	1700	2014										707CM55			780SM1	THUNDERBIRD LT	1700	2014
THUNDERBIRD STORM	1700	2011-2014										707CM55			780SM1	THUNDERBIRD STORM	1700	2011-2014
ROCKET III	2300	2004-2007										707CM55			780SM1	ROCKET III	2300	2004-2007
YAMAHA																**YAMAHA**		
XV VIRAGO (Rear Drum Model)	125	1997-2001				YA05FI						777CM55	777SM1			XV VIRAGO (Rear Drum Model)	125	1997-2001
XVS DRAG STAR (Rear Drum Model)	125	1999-2004				YA05FI						777CM55	777SM1			XVS DRAG STAR (Rear Drum Model)	125	1999-2004
XV VIRAGO	250	1989-1994											735SM1			XV VIRAGO	250	1989-1994
XV VIRAGO	250	1995-2007				YA05FI						777CM55	777SM1			XV VIRAGO	250	1995-2007
XVS DRAG STAR	250	2001				YA05FI						777CM55	777SM1			XVS DRAG STAR	250	2001
XV VIRAGO	400	1988											735SM1			XV VIRAGO	400	1988
XV VIRAGO	500	1983-1985											658SM1			XV VIRAGO	500	1983-1985
XV VIRAGO (Rear Drum Model)	535	1989-1995											735SM1			XV VIRAGO (Rear Drum Model)	535	1989-1995
XVS VIRAGO (Rear Drum Model)	535	1996-2000			YA21FL								750SM1			XVS VIRAGO (Rear Drum Model)	535	1996-2000
XVS DRAG STAR (Rear Drum Model)	650	1997-2004			YA21FL								750SM1			XVS DRAG STAR (Rear Drum Model)	650	1997-2004
XVS DRAG STAR CLASSIC (Rear Drum Model)	650	1998-2007			YA21FL								750SM1			XVS DRAG STAR CLASSIC (Rear Drum Model)	650	1998-2007
XVS V-STAR	650	1998-2007											750SM1			XVS V-STAR	650	1998-2007
XV VIRAGO (Rear Drum Model)	750	1990-1993				YA09RI							750SM1			XV VIRAGO (Rear Drum Model)	750	1990-1993
XV VIRAGO (Rear Drum Model)	750	1994-2000				YA17FI							750SM1			XV VIRAGO (Rear Drum Model)	750	1994-2000
XV VIRAGO	920	1981-1982													661SM1	XV VIRAGO	920	1981-1982
XVS	950	2014											750SM1		903SM1	XVS	950	2014
XVS A MIDNIGHT STAR	950	2009-2013	WK033L / WK033R										750SM1		868SM1	XVS A MIDNIGHT STAR	950	2009-2013
XVS ABS	950	2014											750SM1		903SM1	XVS ABS	950	2014
XVS R ABS	950	2014											750SM1		903SM1	XVS R ABS	950	2014
XV VIRAGO	1000	1984-1985											661SM1		661SM1	XV VIRAGO	1000	1984-1985
XV VIRAGO	1000	1986-1988											661SM1			XV VIRAGO	1000	1986-1988
XV VIRAGO (Rear Drum Model)	1100	1986-1993				YA09RI							661SM1			XV VIRAGO (Rear Drum Model)	1100	1986-1993
XV VIRAGO (Rear Drum Model)	1100	1994-1998											750SM1			XV VIRAGO (Rear Drum Model)	1100	1994-1998
XVS DRAG STAR	1100	1999-2006			YA21FL				YA05FID	YA05FI		777CM55	777SM1		661SM1	XVS DRAG STAR	1100	1999-2006
XVZ VENTURE ROYALE	1200	1984-1987	WK021L / WK021R										661SM1		661SM1	XVZ VENTURE ROYALE	1200	1984-1987
XVS MIDNIGHT STAR	1300	2007-2011	WK021L / WK021R									777CM55			903SM1	XVS MIDNIGHT STAR	1300	2007-2011
XVZ ROYAL STAR	1300	1996-2007			YA21FL					YA19FI			692SM1		692SM1	XVZ ROYAL STAR	1300	1996-2007
XVZ TF ROYAL STAR VENTURE	1300	1999-2007											750SM1		692SM1	XVZ TF ROYAL STAR VENTURE	1300	1999-2007
XVZ VENTURE ROYALE	1300	1988-1995											692SM1		692SM1	XVZ VENTURE ROYALE	1300	1988-1995
ROAD STAR	1600	1999-2007											750SM1		692SM1	ROAD STAR	1600	1999-2007
WILD STAR	1600	1999-2007			YA21FL								750SM1		692SM1	WILD STAR	1600	1999-2007
XV A MIDNIGHT STAR	1900	2006-2012										786CM55			903SM1	XV A MIDNIGHT STAR	1900	2006-2012
XV ROADLINER	1900	2006	WK021L / WK021R		YA21FL											XV ROADLINER	1900	2006

QUAD - ATV

			DISCHI / DISKS				PASTIGLIE / PADS						
			ANTERIORE / FRONT		POSTERIORE / REAR		ANTERIORE / FRONT		POSTERIORE / REAR				
MODELLO / MODEL	CC	ANNO / YEAR	W-FIX	R-FIX	W-FIX	R-FIX	CM44	SM1	CM44	SM1	MODELLO / MODEL	CC	ANNO / YEAR
ADLY											**ADLY**		
INTERCEPTOR	150	2005					702CM44	702SM1	702CM44	702SM1	INTERCEPTOR	150	2005
ATV	300	2005					702CM44	702SM1	702CM44	702SM1	ATV	300	2005
ATV Sport	300	2007						923SM1			ATV Sport	300	2007
CROSS X OVER	300	2007						923SM1			CROSS X OVER	300	2007
CROSS X ROAD	300	2007						923SM1			CROSS X ROAD	300	2007
S	320	2007						923SM1			S	320	2007
U	320	2007						923SM1			U	320	2007
AEON											**AEON**		
AERO	50	2006					669CM44	669SM1			AERO	50	2006
REGAL	50	2006					669CM44	669SM1			REGAL	50	2006
TORCH	50	2006					669CM44	669SM1			TORCH	50	2006
PULSAR	150	2006					669CM44	669SM1			PULSAR	150	2006
TWO HUNDRED	200	2006					702CM44	702SM1	702CM44	702SM1	TWO HUNDRED	200	2006
COBRA	220	2006-2011					702CM44		669CM44	669SM1	COBRA	220	2006-2011
OVERLAND	300	2006-2007					702CM44		669CM44	669SM1	OVERLAND	300	2006-2007
COBRA	350	2011-2012					702CM44		669CM44	669SM1	COBRA	350	2011-2012
CROSSLAND RX	350	2011					702CM44		725CM44		CROSSLAND RX	350	2011
COBRA	400	2010-2013					702CM44		669CM44	669SM1	COBRA	400	2010-2013
CROSSLAND 2x4	400	2012-2013					702CM44		696CM44	696SM1	CROSSLAND 2x4	400	2012-2013
CROSSLAND 4x4	400	2012-2013					702CM44		696CM44	696SM1	CROSSLAND 4x4	400	2012-2013
ARCTIC CAT											**ARCTIC CAT**		
DVX	400	2004-2006					703CM44	703SM1	686CM44	686SM1	DVX	400	2004-2006
ATK											**ATK**		
604 QUADRACER	604	1990						726SM1		694SM1	604 QUADRACER	604	1990
BOMBARDIER											**BOMBARDIER**		
RALLY 2x4	200	2003-2007					702CM44	702SM1			RALLY 2x4	200	2003-2007
TRAXTER 4x4	500	1999-2000						828SM1		828SM1	TRAXTER 4x4	500	1999-2000
CAN-AM											**CAN-AM**		
DS	250	2008						923SM1		923SM1	DS	250	2008
CPI											**CPI**		
XS ATV	250	2007						923SM1			XS ATV	250	2007
FACTORY											**FACTORY**		
HELIX	50	2004							702CM44	702SM1	HELIX	50	2004
REX	50	2004							702CM44	702SM1	REX	50	2004
HELIX	100	2004							702CM44	702SM1	HELIX	100	2004
REX	100	2004							702CM44	702SM1	REX	100	2004
GAS GAS											**GAS GAS**		
WILD HP	50	2004-2005					746CM44	746SM1	746CM44	746SM1	WILD HP	50	2004-2005
WILD HP	240	2004-2005					746CM44	746SM1	746CM44	746SM1	WILD HP	240	2004-2005
WILD HP	300	2003-2006					746CM44	746SM1	746CM44	746SM1	WILD HP	300	2003-2006
WILD HP	450	2003-2005					746CM44	746SM1	746CM44	746SM1	WILD HP	450	2003-2005
HERCULES											**HERCULES**		
ATV	280	2007						923SM1			ATV	280	2007
ATV Sport	300	2007						923SM1			ATV Sport	300	2007
HONDA											**HONDA**		
ATC X	200	1983-1987					686CM44	686SM1	686CM44	686SM1	ATC X	200	1983-1987
ATC R	250	1981-1982					703CM44	703SM1			ATC R	250	1981-1982
ATC R	250	1983-1984					686CM44	686SM1	686CM44	686SM1	ATC R	250	1983-1984
ATC R	250	1985-1986					667CM44	667SM1	667CM44	667SM1	ATC R	250	1985-1986
ATC X	250	1986					667CM44	667SM1	686CM44	686SM1	ATC X	250	1986
TRX EX SPORTRAX	250	2001-2007	HO41FID				686CM44	686SM1			TRX EX SPORTRAX	250	2001-2007
TRX R	250	1986-1987					772CM44	772SM1	667CM44	667SM1	TRX R	250	1986-1987
TRX R	250	1988-1989	HO41FID				772CM44	772SM1	667CM44	667SM1	TRX R	250	1988-1989
TRX X	250	1987-1992	HO41FID		HO40RID	HO40RI	686CM44	686SM1	686CM44	686SM1	TRX X	250	1987-1992
TRX EX	300	1993-2008	HO41FID		HO40RID	HO40RI	686CM44	686SM1	686CM44	686SM1	TRX EX	300	1993-2008
TRX EX SPORTRAX	300	2001			HO40RID	HO40RI	686CM44	686SM1	686CM44	686SM1	TRX EX SPORTRAX	300	2001
ATC	350	1985						704SM1	686CM44	686SM1	ATC	350	1985
ATC X	350	1985					667CM44	667SM1	686CM44	686SM1	ATC X	350	1985
ATC X	350	1986					772CM44	772SM1	686CM44	686SM1	ATC X	350	1986
TRX EX	400	1999-2008	HO41FID		HO47RID		703CM44	703SM1	686CM44	686SM1	TRX EX	400	1999-2008

QUAD - ATV

			DISCHI / DISKS				PASTIGLIE / PADS						
			ANTERIORE / FRONT		POSTERIORE / REAR		ANTERIORE / FRONT		POSTERIORE / REAR				
MODELLO / MODEL	CC	ANNO / YEAR	W-FIX	R-FIX	W-FIX	R-FIX	CM44	SM1	CM44	SM1	MODELLO / MODEL	CC	ANNO / YEAR
TRX EX FOURTRAX	400	1999-2007	H041FID				686CM44	686SM1	686CM44	686SM1	TRX EX FOURTRAX	400	1999-2007
TRX EX SPORTRAX	400	2001	H041FID				686CM44	686SM1	686CM44	686SM1	TRX EX SPORTRAX	400	2001
TRX R	450	2004-2009	H041FID		H053RID		772CM44	772SM1	911CM44		TRX R	450	2004-2009
TRX	650	2003-2005							911CM44		TRX	650	2003-2005
TRX	680	2006-2014							911CM44		TRX	680	2006-2014
HYOSUNG											**HYOSUNG**		
TE	400	2005					686CM44	686SM1			TE	400	2005
KAWASAKI											**KAWASAKI**		
KSF MOJAVE	250	1987-2003					669CM44	669SM1	686CM44	686SM1	KSF MOJAVE	250	1987-2003
KXT	250	1984							702CM44	702SM1	KXT	250	1984
KXT	250	1985-1986					702CM44	702SM1	702CM44	702SM1	KXT	250	1985-1986
KXT	250	1987-1988					669CM44	669SM1	686CM44	686SM1	KXT	250	1987-1988
KEF LAKOTA	300	1995-1996							686CM44	686SM1	KEF LAKOTA	300	1995-1996
KLF BAJOU	300	1989-2001					669CM44	669SM1			KLF BAJOU	300	1989-2001
KLF BAJOU 4X4	300	1989					696CM44 / 725CM44	696SM1 / 725SM1			KLF BAJOU 4X4	300	1989
KLF BAJOU 4X4	300	1990						725SM1			KLF BAJOU 4X4	300	1990
KVF	300	1999-2001					703CM44	703SM1			KVF	300	1999-2001
KFX	400	2002-2006	SZ16FID	SZ16FI	H047RID		703CM44	703SM1	686CM44	686SM1	KFX	400	2002-2006
KLF BAJOU	400	1993-1999					696CM44 / 725CM44	696SM1 / 725SM1			KLF BAJOU	400	1993-1999
KVF	400	1999					703CM44	703SM1			KVF	400	1999
KFX R	450	2008-2014	WF9101		WF9501				686CM44	686SM1	KFX R	450	2008-2014
KVF 4x4i	750	2005					696CM44 / 725CM44	696SM1 / 725SM1			KVF 4x4i	750	2005
KVF 4x4i	750	2006						725SM1			KVF 4x4i	750	2006
KYMCO											**KYMCO**		
MXER	50	2003	KM01FID	KM01FI				869SM1			MXER	50	2003
MXU	50	2005						869SM1			MXU	50	2005
MXER	125	2002-2007								869SM1	MXER	125	2002-2007
MXU	150	2005						869SM1			MXU	150	2005
KXR	250	2004-2007						923SM1		883SM1	KXR	250	2004-2007
MXU	250	2006-2009						883SM1 / 923SM1			MXU	250	2006-2009
URBAN QUAD	250	2006						923SM1		883SM1	URBAN QUAD	250	2006
MAXXER	300	2006-2011						923SM1		883SM1	MAXXER	300	2006-2011
MXU	300	2006-2011						923SM1		923SM1	MXU	300	2006-2011
MXU R	300	2010-2011						923SM1		923SM1	MXU R	300	2010-2011
MXU	500	2006						923SM1		923SM1	MXU	500	2006
UXV 4x4	500	2008-2011						923SM1		923SM1	UXV 4x4	500	2008-2011
PGO											**PGO**		
X-RIDER	50	2003							702CM44	702SM1	X-RIDER	50	2003
X-RIDER	125	2003							703CM44	703SM1	X-RIDER	125	2003
X-RIDER	150	2003							702CM44	702SM1	X-RIDER	150	2003
POLARIS											**POLARIS**		
PHOENIX	200	2005					857CM44		669CM44	669SM1	PHOENIX	200	2005
PHOENIX (Rear disc model)	200	2005-2008					702CM44	702SM1	702CM44	702SM1	PHOENIX (Rear disc model)	200	2005-2008
PHOENIX (Rear drum model)	200	2006-2012					702CM44	702SM1			PHOENIX (Rear drum model)	200	2006-2012
SAWTOOTH	200	2006-2007					702CM44	702SM1	702CM44	702SM1	SAWTOOTH	200	2006-2007
250 L 2x4	250	1990-1993					857CM44		856CM44		250 L 2x4	250	1990-1993
250 L 4x4	250	1990-1993					857CM44		856CM44		250 L 4x4	250	1990-1993
BIG BOSS 4x6	250	1989-1992					857CM44		856CM44		BIG BOSS 4x6	250	1989-1992
BIG BOSS 6x6	250	1991-1993					857CM44		856CM44		BIG BOSS 6x6	250	1991-1993
TRAIL BLAZER	250	1990-1998					857CM44		856CM44		TRAIL BLAZER	250	1990-1998
TRAIL BLAZER	250	1999-2006					857CM44		860CM44		TRAIL BLAZER	250	1999-2006
TRAIL BOSS	250	1991-1999					857CM44		856CM44		TRAIL BOSS	250	1991-1999
TRAIL BOSS 2x4	250	1988-1992					857CM44		856CM44		TRAIL BOSS 2x4	250	1988-1992
TRAIL BOSS 4x4	250	1988-1992					857CM44		856CM44		TRAIL BOSS 4x4	250	1988-1992
XPLORER 4x4	250	2000					857CM44		860CM44		XPLORER 4x4	250	2000
300 2x4	300	1994-1995					857CM44		856CM44		300 2x4	300	1994-1995
300 4x4	300	1994-1995					857CM44		856CM44		300 4x4	300	1994-1995
BIG BOSS 6x6	300	1994					857CM44		856CM44		BIG BOSS 6x6	300	1994
HAWKEYE 2x4	300	2007-2009					857CM44		857CM44		HAWKEYE 2x4	300	2007-2009
HAWKEYE 4x4	300	2007					857CM44		857CM44		HAWKEYE 4x4	300	2007
SPORTSMAN	300	2008-2010					857CM44		857CM44		SPORTSMAN	300	2008-2010
XPLORER 4x4	300	1996-2000					857CM44		856CM44		XPLORER 4x4	300	1996-2000
XPRESS 2x4	300	1996-2000					857CM44		856CM44		XPRESS 2x4	300	1996-2000

QUAD - ATV

			DISCHI / DISKS				PASTIGLIE / PADS						
			ANTERIORE / FRONT		POSTERIORE / REAR		ANTERIORE / FRONT		POSTERIORE / REAR				
MODELLO / MODEL	CC	ANNO / YEAR	W-FIX	R-FIX	W-FIX	R-FIX	CM44	SM1	CM44	SM1	MODELLO / MODEL	CC	ANNO / YEAR
XPRESS L	300	1996-1997					857CM44		856CM44		XPRESS L	300	1996-1997
MAGNUM 2x4	325	2000					857CM44		860CM44		MAGNUM 2x4	325	2000
MAGNUM 2x4 HDS	325	2002					857CM44				MAGNUM 2x4 HDS	325	2002
MAGNUM 2x4 MOSE	325	2001					857CM44		860CM44		MAGNUM 2x4 MOSE	325	2001
MAGNUM 4x4	325	2000					857CM44		860CM44		MAGNUM 4x4	325	2000
MAGNUM 4x4 HDS	325	2002					857CM44				MAGNUM 4x4 HDS	325	2002
MAGNUM 4x4 MOSE	325	2001					857CM44		860CM44		MAGNUM 4x4 MOSE	325	2001
TRAIL BOSS	325	2000-2002					857CM44		860CM44		TRAIL BOSS	325	2000-2002
XPEDITION	325	2000-2001					857CM44		860CM44		XPEDITION	325	2000-2001
XPEDITION	325	2002					857CM44				XPEDITION	325	2002
ATP 4x4	330	2004-2005					857CM44		857CM44		ATP 4x4	330	2004-2005
MAGNUM 2x4	330	2003-2006					857CM44				MAGNUM 2x4	330	2003-2006
MAGNUM 4x4	330	2003-2004					857CM44				MAGNUM 4x4	330	2003-2004
TRAIL BLAZER	330	2008-2012					857CM44				TRAIL BLAZER	330	2008-2012
TRAIL BOSS	330	2003-2004					857CM44		860CM44		TRAIL BOSS	330	2003-2004
TRAIL BOSS	330	2005-2012					857CM44				TRAIL BOSS	330	2005-2012
SPORTSMAN 4x4	335	1999-2000					857CM44		860CM44		SPORTSMAN 4x4	335	1999-2000
SPORTSMAN/WORKER 4x4	335	1999-2000					857CM44		860CM44		SPORTSMAN/WORKER 4x4	335	1999-2000
350 L 2x4	350	1990-1994					857CM44		856CM44		350 L 2x4	350	1990-1994
350 L 4x4	350	1994					857CM44		856CM44		350 L 4x4	350	1994
BIG BOSS L	350	1993					857CM44		856CM44		BIG BOSS L	350	1993
SPORTSMAN 4x4	350	1993					857CM44		856CM44		SPORTSMAN 4x4	350	1993
TRAIL BOSS L 2x4	350	1991-1993					857CM44		856CM44		TRAIL BOSS L 2x4	350	1991-1993
TRAIL BOSS L 4x4	350	1991					857CM44		856CM44		TRAIL BOSS L 4x4	350	1991
400 L 2x4	400	1994-1995					857CM44		856CM44		400 L 2x4	400	1994-1995
400 L 4x4	400	1994-1995					857CM44		856CM44		400 L 4x4	400	1994-1995
BIG BOSS L 6x6	400	1994-1997					857CM44		860CM44		BIG BOSS L 6x6	400	1994-1997
SCRAMBLER 2x4	400	2000-2002					857CM44		860CM44		SCRAMBLER 2x4	400	2000-2002
SCRAMBLER 4x4	400	1998-2002					857CM44		860CM44		SCRAMBLER 4x4	400	1998-2002
SCRAMBLER L 4x4	400	1995-1997					857CM44		856CM44		SCRAMBLER L 4x4	400	1995-1997
SPORT L	400	1994-1999					857CM44		856CM44		SPORT L	400	1994-1999
SPORTSMAN	400	1994-2002					857CM44		860CM44		SPORTSMAN	400	1994-2002
SPORTSMAN	400	2003-2005					857CM44				SPORTSMAN	400	2003-2005
SPORTSMAN HO 4x4	400	2008-2010					857CM44		857CM44		SPORTSMAN HO 4x4	400	2008-2010
SPORTSMAN HO 4x4	400	2011-2012					857CM44				SPORTSMAN HO 4x4	400	2011-2012
SPORTSMAN L 4x4	400	1994-1997					857CM44		856CM44		SPORTSMAN L 4x4	400	1994-1997
TRAIL BLAZER	400	2003					857CM44		860CM44		TRAIL BLAZER	400	2003
XPLORER L 4x4	400	1995-1998					857CM44		856CM44		XPLORER L 4x4	400	1995-1998
XPLORER L 4x4	400	1999-2002					857CM44		860CM44		XPLORER L 4x4	400	1999-2002
XPRESS L	400	1996-1997					857CM44		856CM44		XPRESS L	400	1996-1997
MAGNUM 2x4	425	1995-1998					857CM44		856CM44		MAGNUM 2x4	425	1995-1998
MAGNUM 4x4	425	1995-1998					857CM44		856CM44		MAGNUM 4x4	425	1995-1998
MAGNUM 6x6	425	1996-1997					857CM44		860CM44		MAGNUM 6x6	425	1996-1997
XPEDITION 4x4	425	2000					857CM44		860CM44		XPEDITION 4x4	425	2000
DIESEL 4x4	450	1999-2001					857CM44		860CM44		DIESEL 4x4	450	1999-2001
OUTLAW MXR	450	2009-2010							857CM44		OUTLAW MXR	450	2009-2010
OUTLAW S	450	2008							857CM44		OUTLAW S	450	2008
SPORTSMAN	450	2006-2007					857CM44				SPORTSMAN	450	2006-2007
ATP HO	500	2004-2005					857CM44		857CM44		ATP HO	500	2004-2005
ATV PRO 4x4	500	2002					857CM44				ATV PRO 4x4	500	2002
BIG BOSS 6x6	500	1998-1999					857CM44		860CM44		BIG BOSS 6x6	500	1998-1999
MAGNUM 2x4	500	2002					857CM44				MAGNUM 2x4	500	2002
MAGNUM 4x4	500	2000-2002					857CM44		860CM44		MAGNUM 4x4	500	2000-2002
MAGNUM 4x4 HDS	500	2002-2003					857CM44				MAGNUM 4x4 HDS	500	2002-2003
OUTLAW IRS	500	2006-2007					857CM44		857CM44		OUTLAW IRS	500	2006-2007
PREDATOR	500	2003-2007	PL04FID		PL04RID		857CM44		857CM44		PREDATOR	500	2003-2007
RANGER 6x6	500	2000					857CM44				RANGER 6x6	500	2000
SCRAMBLER 2x4	500	2001-2002					857CM44		860CM44		SCRAMBLER 2x4	500	2001-2002
SCRAMBLER 2x4	500	2007-2008					857CM44				SCRAMBLER 2x4	500	2007-2008
SCRAMBLER 4x4	500	1997					857CM44		856CM44		SCRAMBLER 4x4	500	1997
SCRAMBLER 4x4	500	1998-2004					857CM44		860CM44		SCRAMBLER 4x4	500	1998-2004
SCRAMBLER 4x4	500	2005-2012					857CM44				SCRAMBLER 4x4	500	2005-2012
SPORTSMAN 4x4	500	1998-2000					857CM44		856CM44		SPORTSMAN 4x4	500	1998-2000
SPORTSMAN 6x6	500	1996-1999					857CM44		856CM44		SPORTSMAN 6x6	500	1996-1999
SPORTSMAN 6x6	500	2000-2008					857CM44				SPORTSMAN 6x6	500	2000-2008
SPORTSMAN EBS 4x4	500	1998-2002					857CM44		860CM44		SPORTSMAN EBS 4x4	500	1998-2002

QUAD - ATV

QUAD - ATV

			DISCHI / DISKS				PASTIGLIE / PADS						
			ANTERIORE / FRONT		POSTERIORE / REAR		ANTERIORE / FRONT		POSTERIORE / REAR				
MODELLO / MODEL	CC	ANNO / YEAR	W-FIX	R-FIX	W-FIX	R-FIX	CM44	SM1	CM44	SM1	MODELLO / MODEL	CC	ANNO / YEAR
SPORTSMAN EFI QUAD H.O.	500	2008-2011					857CM44				SPORTSMAN EFI QUAD H.O.	500	2008-2011
SPORTSMAN FOREST	500	2012					857CM44				SPORTSMAN FOREST	500	2012
SPORTSMAN HO	500	2009-2012					857CM44				SPORTSMAN HO	500	2009-2012
SPORTSMAN HO/EFI	500	2003-2008					857CM44				SPORTSMAN HO/EFI	500	2003-2008
SPORTSMAN TOURING H.O.	500	2008-2011					857CM44		857CM44		SPORTSMAN TOURING H.O.	500	2008-2011
SPORTSMAN TOURING H.O.	500	2012					857CM44				SPORTSMAN TOURING H.O.	500	2012
SPORTSMAN X2	500	2006-2008					857CM44				SPORTSMAN X2	500	2006-2008
SPORTSMAN X2 EFI	500	2007-2009					857CM44		857CM44		SPORTSMAN X2 EFI	500	2007-2009
XPLORER 4x4	500	1997					857CM44		856CM44		XPLORER 4x4	500	1997
OUTLAW IRS	525	2008-2011							857CM44		OUTLAW IRS	525	2008-2011
OUTLAW S	525	2008-2010							857CM44		OUTLAW S	525	2008-2010
SPORTSMAN	600	2003-2005					857CM44				SPORTSMAN	600	2003-2005
SPORTSMAN	700	2002-2007					857CM44				SPORTSMAN	700	2002-2007
SPORTSMAN MV	700	2005-2006					857CM44				SPORTSMAN MV	700	2005-2006
SPORTSMAN X2	700	2008					857CM44		857CM44		SPORTSMAN X2	700	2008
SPORTSMAN	800	2005-2012					857CM44				SPORTSMAN	800	2005-2012
SPORTSMAN BIG BOSS/EFI 6x6	800	2009-2012					857CM44				SPORTSMAN BIG BOSS/EFI 6x6	800	2009-2012
SPORTSMAN EFI	800	2005-2012					857CM44				SPORTSMAN EFI	800	2005-2012
SPORTSMAN EFI HO	800	2007-2011					857CM44				SPORTSMAN EFI HO	800	2007-2011
SPORTSMAN TOURING EFI	800	2008-2009					857CM44		857CM44		SPORTSMAN TOURING EFI	800	2008-2009
SPORTSMAN X2 EFI	800	2007-2009					857CM44		857CM44		SPORTSMAN X2 EFI	800	2007-2009
SACHS											**SACHS**		
4 ROCK	250	2004-2006								795SM1	4 ROCK	250	2004-2006
SUZUKI											**SUZUKI**		
LT E QUADRUNNER	230	1987-1993		SZ27FI			669CM44	669SM1			LT E QUADRUNNER	230	1987-1993
LT S QUADSPORT	230	1985-1988		SZ27FI			669CM44	669SM1			LT S QUADSPORT	230	1985-1988
LT F OZARK (Rear Drum Model)	250	2002-2014					703CM44	703SM1			LT F OZARK (Rear Drum Model)	250	2002-2014
LT R QUADRACER	250	1985-1992		SZ27FI		SZ27RI	669CM44	669SM1			LT R QUADRACER	250	1985-1992
LT S QUADSPORT	250	1989-1990		SZ27FI			669CM44	669SM1			LT S QUADSPORT	250	1989-1990
LT Z	250	2004-2008	SZ16FID	SZ16FI							LT Z	250	2004-2008
LT F KING QUAD	300	2002					696CM44 / 725CM44	696SM1 / 725SM1			LT F KING QUAD	300	2002
LT F EIGER	400	2002-2007					703CM44	703SM1			LT F EIGER	400	2002-2007
LT Z QUADSPORT	400	2003-2009	SZ16FID	SZ16FI	H047RID						LT Z QUADSPORT	400	2003-2009
LTA F	400	2008					935CM44 / 936CM44				LTA F	400	2008
LT R QUADRACER	450	2006-2010	SZ43FID		SZ43RID		696CM44 / 725CM44	696SM1 / 725SM1			LT R QUADRACER	450	2006-2010
LTA X	450	2007-2009					935CM44 / 936CM44				LTA X	450	2007-2009
LT	500	1987-1995					669CM44	669SM1			LT	500	1987-1995
LT A F VINSON	500	2002-2007					703CM44	703SM1			LT A F VINSON	500	2002-2007
LT A QUADMASTER	500	2000-2001					696CM44 / 725CM44	696SM1 / 725SM1			LT A QUADMASTER	500	2000-2001
LT F QUADRUNNER	500	1998-2002					696CM44 / 725CM44	696SM1 / 725SM1			LT F QUADRUNNER	500	1998-2002
LT R QUADRACER	500	1987-1990	SZ16FID	SZ16FI			669CM44	669SM1			LT R QUADRACER	500	1987-1990
LT A KING QUAD	700	2005-2007					935CM44 / 936CM44				LT A KING QUAD	700	2005-2007
LTA X	750	2007-2008					935CM44 / 936CM44				LTA X	750	2007-2008
SYM											**SYM**		
TRACKRUNNER	200	2006-2009						923SM1		948SM1	TRACKRUNNER	200	2006-2009
QUADLANDER	250	2005-2009						923SM1		948SM1	QUADLANDER	250	2005-2009
OUTLANDER	300	2008-2010						923SM1		923SM1	OUTLANDER	300	2008-2010
OUTLANDER S	300	2007-2008						923SM1		923SM1	OUTLANDER S	300	2007-2008
QUADLANDER	300	2006						923SM1		923SM1	QUADLANDER	300	2006
QUAD RAIDER	600	2008-2009						923SM1		923SM1	QUAD RAIDER	600	2008-2009
QUAD RAIDER LE	600	2010						923SM1		923SM1	QUAD RAIDER LE	600	2010
TGB											**TGB**		
BUFFALO	150	2003							725CM44	725SM1	BUFFALO	150	2003
YAMAHA											**YAMAHA**		
YFS BLASTER	200	1988-2002			YA30RID	YA30RI					YFS BLASTER	200	1988-2002
YFS R BLASTER	200	2003-2006	YA30FID	YA30FI	YA30RID	YA30RI	703CM44	703SM1	686CM44	686SM1	YFS R BLASTER	200	2003-2006
YFM AN BRUIN 2x4	250	2005					703CM44	703SM1			YFM AN BRUIN 2x4	250	2005
YFM BEAR TRACKER	250	2001-2004	YA30FID	YA03FI			703CM44	703SM1			YFM BEAR TRACKER	250	2001-2004
YFM BIG BEAR	250	2007-2008					703CM44	703SM1			YFM BIG BEAR	250	2007-2008
YFM RAPTOR	250	2008-2009	YA30FID	YA30FI	YA43RID				686CM44	686SM1	YFM RAPTOR	250	2008-2009
YTZ	250	1985-1986						685SM1		685SM1	YTZ	250	1985-1986
YFM WARRIOR	300	1989					703CM44	703SM1	686CM44	686SM1	YFM WARRIOR	300	1989
YFM BIG BEAR	350	1999					703CM44	703SM1			YFM BIG BEAR	350	1999
YFM BRUIN 2x4/4x4	350	2004-2006					703CM44	703SM1			YFM BRUIN 2x4/4x4	350	2004-2006

QUAD - ATV

			DISCHI / DISKS				PASTIGLIE / PADS						
			ANTERIORE / FRONT		POSTERIORE / REAR		ANTERIORE / FRONT		POSTERIORE / REAR				
MODELLO / MODEL	CC	ANNO / YEAR	W-FIX	R-FIX	W-FIX	R-FIX	CM44	SM1	CM44	SM1	MODELLO / MODEL	CC	ANNO / YEAR
YFM FX WOLVERINE	350	1995					703CM44	703SM1	686CM44	686SM1	YFM FX WOLVERINE	350	1995
YFM GRIZZLY 2x4/4x4	350	2007-2008					703CM44	703SM1			YFM GRIZZLY 2x4/4x4	350	2007-2008
YFM R RAPTOR	350	2004-2008	YA30FID	YA30FI	YA43RID		686CM44	686SM1	686CM44	686SM1	YFM R RAPTOR	350	2004-2008
YFM WOLVERINE 2WD	350	2006-2008					703CM44	703SM1			YFM WOLVERINE 2WD	350	2006-2008
YFM X WARRIOR	350	1987-1988	YA30FID	YA30FI	YA31RID			685SM1	686CM44	686SM1	YFM X WARRIOR	350	1987-1988
YFM X WARRIOR	350	1989-2003	YA30FID	YA30FI	YA31RID		703CM44	703SM1	703CM44	703SM1	YFM X WARRIOR	350	1989-2003
YFZ BANSHEE	350	1987-1989	YA30FID	YA30FI	YA30RID	YA30RI		685SM1	686CM44	686SM1	YFZ BANSHEE	350	1987-1989
YFZ BANSHEE	350	1990-2009	YA30FID	YA30FI	YA30RID	YA30RI	703CM44	703SM1	686CM44	686SM1	YFZ BANSHEE	350	1990-2009
YFM BIG BEAR	400	2000-2008					703CM44	703SM1			YFM BIG BEAR	400	2000-2008
YFM KODIAK ALL	400	1999-2004					703CM44	703SM1			YFM KODIAK ALL	400	1999-2004
YFM FAR KODIAK	450	2003					703CM44	703SM1			YFM FAR KODIAK	450	2003
YFM GRIZZLY 4x4	450	2007-2014					703CM44	703SM1			YFM GRIZZLY 4x4	450	2007-2014
YFM KODIAK 4x4 auto	450	2005-2006					686CM44	686SM1			YFM KODIAK 4x4 auto	450	2005-2006
YFM WOLVERINE 4x4	450	2006-2008					703CM44	703SM1			YFM WOLVERINE 4x4	450	2006-2008
YFZ R	450	2011-2014					696CM44 / 725CM44		940CM44		YFZ R	450	2011-2014
YFZ S	450	2004-2005	YA30FID	YA30FI	YA43RID		696CM44 / 725CM44	696SM1 / 725SM1	686CM44	686SM1	YFZ S	450	2004-2005
YFZ S	450	2006-2009	YA30FID	YA30FI	YA51RID		696CM44 / 725CM44	696SM1 / 725SM1	940CM44		YFZ S	450	2006-2009
YXR RHINO	450	2006-2008					696CM44 / 725CM44	696SM1 / 725SM1	936CM44		YXR RHINO	450	2006-2008
YFM GRIZZLY 4x4	600	1998-2001					686CM44	686SM1			YFM GRIZZLY 4x4	600	1998-2001
YFM FWAP GRIZZLY 4x4	660	2002-2008					686CM44	686SM1			YFM FWAP GRIZZLY 4x4	660	2002-2008
YFM RN RAPTOR	660	2001-2005	YA30FID	YA30FI	YA30RID	YA30RI	686CM44	686SM1	686CM44	686SM1	YFM RN RAPTOR	660	2001-2005
YXR RHINO	660	2004-2007					696CM44 / 725CM44	696SM1 / 725SM1	936CM44		YXR RHINO	660	2004-2007
YFM RN RAPTOR	700	2006-2009	YA30FID	YA30FI	YA51RID		696CM44 / 725CM44	696SM1 / 725SM1	936CM44		YFM RN RAPTOR	700	2006-2009
YXR RHINO	700	2008-2012					696CM44 / 725CM44	696SM1 / 725SM1	936CM44		YXR RHINO	700	2008-2012

QUAD - ATV

I codici che terminano in D indicano sempre il disco Wave®
The codes that finish in D indicate always disc Wave®

FL > disco anteriore sinistro / front left disk
FR > disco anteriore destro / front right disk
R > disco posteriore / rear disk

CODICE P/N	Ø Esterno Ø Outer	Ø Interno Ø Inner	Spessore Tickness	Nr fori No. holes	Interasse fori Bolt pattern	Ø Fori Ø Holes	Campanatura Total height
AP08RI	220	102	4	5	120	8,5	-
APRILIA							
RS REPLICA					250	1995-2003	R
RSV					1000	1998-2003	R
RSV FACTORY					1000	2003-2007	R
RSV R					1000	2000-2008	R
RSV SP					1000	1999-2000	R
SL 1000 FALCO					1000	2000-2004	R
TUONO					1000	2002-2005	R
TUONO FIGHTER					1000	2002-2005	R
TUONO R (2 pads per caliper)					1000	2003-2009	R
TUONO R (4 pads per caliper)					1000	2003-2005	R
AP08RID	220	102,5	5	5	120	8,5	-
APRILIA							
RS REPLICA					250	1995-2003	R
RSV					1000	1998-2003	R
RSV FACTORY					1000	2003-2007	R
RSV R					1000	2000-2008	R
RSV SP					1000	1999-2000	R
SL 1000 FALCO					1000	2000-2004	R
TUONO					1000	2002-2005	R
TUONO FIGHTER					1000	2002-2005	R
TUONO R (2 pads per caliper)					1000	2003-2009	R
TUONO R (4 pads per caliper)					1000	2003-2005	R
AP10FI	260	60	4	5	80	8,5	-
APRILIA							
SCARABEO					125	1999-2010	FL
SCARABEO GT					125	1999-2003	FL
SPORTCITY					125	2004-2007	FL
SCARABEO					150	1999-2002	FL
SCARABEO GT					200	2001-2004	FL
SPORTCITY					200	2005-2007	FL
SCARABEO					250	2005-2008	FL
SCARABEO LIGHT					250	2006-2008	FL
SPORTCITY					250	2006-2007	FL/FR
SCARABEO					300	2009	FL
SCARABEO LIGHT					300	2009-2010	FL
SCARABEO URBAN					400	2006-2007	FL/FR
ATLANTIC					500	2002-2005	FL/FR
SCARABEO					500	2003-2005	FL/FR
SCARABEO URBAN					500	2006-2007	FL/FR
AP10FID	260	61	4	5	80	8,5	-
APRILIA							
SCARABEO					125	1999-2010	FL
SCARABEO GT					125	1999-2003	FL
SPORTCITY					125	2004-2007	FL
SCARABEO					150	1999-2002	FL
SCARABEO GT					200	2001-2004	FL
SPORTCITY					200	2005-2007	FL
SCARABEO					250	2005-2008	FL
SCARABEO LIGHT					250	2006-2008	FL
SPORTCITY					250	2006-2007	FL/FR
SCARABEO					300	2009	FL
SCARABEO LIGHT					300	2009-2010	FL
SCARABEO URBAN					400	2006-2007	FL/FR
ATLANTIC					500	2002-2005	FL/FR
SCARABEO					500	2003-2005	FL/FR
SCARABEO URBAN					500	2006-2007	FL/FR

CODICE P/N	Ø Esterno Ø Outer	Ø Interno Ø Inner	Spessore Tickness	Nr fori No. holes	Interasse fori Bolt pattern	Ø Fori Ø Holes	Campanatura Total height
AP11FI	190	58	3,8	3	80	8,5	-
APRILIA							
AREA 51					50	1998-2002	R
AREA 51 SBK					50	2000-2002	R
GULLIVER					50	1997-1999	FL
HABANA					50	1998-2002	FL
RALLY AC					50	1995-2000	FL
RALLY LC					50	1997	FL
RALLY LC					50	1997	R
SCARABEO					50	1998-2005	R
SCARABEO 4t					50	2002-2009	R
SCARABEO DE-LUX					50	1998	R
SCARABEO DITECH					50	2001-2004	R
SR AC LC					50	1994-2000	FL
SR DITECH					50	2001-2006	FL
SR DITECH					50	2001-2006	R
SR R FACTORY					50	2005-2006	FL
SR STEALTH LC					50	1996-2000	FL
SR STEALTH LC					50	1996-2000	R
SR STREET					50	2003-2012	FL
SR STREET					50	2003-2012	R
SR WWW					50	1997	FL
LEONARDO					125	1996	R
LEONARDO					125	1997-1998	R
LEONARDO (Grimeca cal.)					125	1999-2004	R
LEONARDO ST					125	1999	R
MOJITO					125	2003-2008	FL
MOJITO RETRO					125	1999-2001	FL
SR					125	1999-2003	FL
LEONARDO					150	1997-1998	R
LEONARDO ST					150	1999	R
SR					150	1999-2003	FL
BETA							
ARK					50	1997	FL
ARK LC					50	1999	FL
ARK LC					50	1999	R
CHRONO 13					50	1994-1999	FL
TEMPO 13					50	1995-1996	FL
GILERA							
NRG					50	1994	FL
STALKER DD					50	1997-2001	FL
STALKER DT					50	1997-2005	FL
STORM					50	1994	FL
HUSQVARNA							
WRS					50	1998	FL
KTM							
KROSS					50	1994-1999	FL
MBK							
OVETTO					50	1997-2010	FL
OVETTO					100	1999-2002	FL
PIAGGIO							
NRG					50	1993-2001	FL
NTT					50	1994-1996	FL
TYPHOON					50	1993-1997	FL
TYPHOON 2T (GRIMECA CAL./10 WHEELS)					50	2000-2004	FL
TYPHOON 2T (HENG TONG CAL./10 WHEELS)					50	2001-2009	FL
TYPHOON X					50	1998-1999	FL
TYPHOON XR					50	2000	FL
TYPHOON					80	1997-1998	FL
TYPHOON					125	1995-2000	FL
YAMAHA							
NEOS (Rear Drum Model)					50	1997-2006	FL
NEOS (Rear Drum Model)					100	2000-2002	FL
AP11FID	190	58	3,8	3	80	8,5	-
APRILIA							
AREA 51					50	1998-2002	R
AREA 51 SBK					50	2000-2002	R
GULLIVER					50	1997-1999	FL

CODICE P/N	Ø Esterno Ø Outer	Ø Interno Ø Inner	Spessore Tickness	Nr fori No. holes	Interasse fori Bolt pattern	Ø Fori Ø Holes	Campanatura Total height
AP11FID	190	58	3,8	3	80	8,5	-
HABANA					50	1998-2002	FL
RALLY AC					50	1995-2000	FL
RALLY LC					50	1997	FL
RALLY LC					50	1997	R
SCARABEO					50	1998-2005	R
SCARABEO 4t					50	2002-2009	R
SCARABEO DE-LUX					50	1998	R
SCARABEO DITECH					50	2001-2004	R
SR AC LC					50	1994-2000	FL
SR DITECH					50	2001-2006	FL
SR DITECH					50	2001-2006	R
SR R FACTORY					50	2005-2006	FL
SR STEALTH LC					50	1996-2000	FL
SR STEALTH LC					50	1996-2000	R
SR STREET					50	2003-2012	R
SR STREET					50	2003-2012	FL
SR WWW					50	1997	FL
LEONARDO					125	1996	R
LEONARDO					125	1997-1998	R
LEONARDO (Grimeca cal.)					125	1999-2004	R
LEONARDO ST					125	1999	R
MOJITO					125	2003-2008	FL
MOJITO RETRO					125	1999-2001	FL
SR					125	1999-2003	FL
LEONARDO					150	1997-1998	R
LEONARDO ST					150	1999	R
SR					150	1999-2003	FL
BETA							
ARK					50	1997	FL
ARK LC					50	1999	FL
ARK LC					50	1999	R
CHRONO 13					50	1994-1999	FL
TEMPO 13					50	1995-1996	FL
GILERA							
NRG					50	1994	FL
STALKER DD					50	1997-2001	FL
STALKER DT					50	1997-2005	FL
STORM					50	1994	FL
HUSQVARNA							
WRS					50	1998	FL
KTM							
KROSS					50	1994-1999	FL
MBK							
OVETTO					50	1997-2010	FL
OVETTO					100	1999-2002	FL
PIAGGIO							
NRG					50	1993-2001	FL
NTT					50	1994-1996	FL
TYPHOON					50	1993-1997	FL
TYPHOON 2T (GRIMECA CAL./10 WHEELS)					50	2000-2004	FL
TYPHOON 2T (HENG TONG CAL./10 WHEELS)					50	2001-2009	FL
TYPHOON X					50	1998-1999	FL
TYPHOON XR					50	2000	FL
TYPHOON					80	1997-1998	FL
TYPHOON					125	1995-2000	FL
YAMAHA							
NEOS (Rear Drum Model)					50	1997-2006	FL
NEOS (Rear Drum Model)					100	2000-2002	FL
AP13FL	300	105	5	6	120	6,5	-
APRILIA							
PEGASO					650	1991-2000	FL
PEGASO I.E.					650	2001-2004	FL
PEGASO TRAIL					650	2005-2008	FL

CODICE P/N	Ø Esterno Ø Outer	Ø Interno Ø Inner	Spessore Tickness	Nr fori No. holes	Interasse fori Bolt pattern	Ø Fori Ø Holes	Campanatura Total height
AP13RI	220	110	4	6	125	6,5	-
APRILIA							
MX					125	2004-2007	R
PEGASO					125	1990-1991	R
RS Extrema					125	1992-1997	R
RS REPLICA					125	1992-1997	R
PEGASO					600	1989-1990	R
PEGASO					650	1991-2000	R
AP13RID	220	110,5	4	6	125	6,5	-
APRILIA							
MX					125	2004-2007	R
PEGASO					125	1990-1991	R
RS Extrema					125	1992-1997	R
RS REPLICA					125	1992-1997	R
PEGASO					600	1989-1990	R
PEGASO					650	1991-2000	R
AP16FI	220	60	4	5	80	8,5	-
APRILIA							
LEONARDO					125	1996-1998	FL
LEONARDO (Grimeca cal.)					125	1999-2004	FL
LEONARDO ST					125	1999	FL
SCARABEO					125	1999-2003	R
SCARABEO GT					125	1999-2003	R
SPORTCITY					125	2004-2007	R
LEONARDO					150	1997-1998	FL
LEONARDO ST					150	1999	FL
SCARABEO					150	1999-2002	R
SCARABEO GT					200	2001-2004	R
SPORTCITY					200	2005-2007	R
LEONARDO					250	1999-2004	FL
LEONARDO (Grimeca cal.)					250	1999-2004	FL
SPORTCITY					250	2006-2007	R
LEONARDO (Grimeca cal.)					300	2005-2006	FL
LEONARDO ST					300	2005-2006	FL
BETA							
EIKON					125	1999-2003	FL
AP16FID	220	60	4	5	80	8,5	-
APRILIA							
LEONARDO					125	1996-1998	FL
LEONARDO (Grimeca cal.)					125	1999-2004	FL
LEONARDO ST					125	1999	FL
SCARABEO					125	1999-2003	R
SCARABEO GT					125	1999-2003	R
SPORTCITY					125	2004-2007	R
LEONARDO					150	1997-1998	FL
LEONARDO ST					150	1999	FL
SCARABEO					150	1999-2002	R
SCARABEO GT					200	2001-2004	R
SPORTCITY					200	2005-2007	R
LEONARDO					250	1999-2004	FL
LEONARDO (Grimeca cal.)					250	1999-2004	FL
SPORTCITY					250	2006-2007	R
LEONARDO (Grimeca cal.)					300	2005-2006	FL
LEONARDO ST					300	2005-2006	FL
BETA							
EIKON					125	1999-2003	FL

I codici che terminano in D indicano sempre il disco Wave®
The codes that finish in D indicate always disc Wave®

FL > disco anteriore sinistro / front left disk
FR > disco anteriore destro / front right disk
R > disco posteriore / rear disk

CODICE P/N	Ø Esterno Ø Outer	Ø Interno Ø Inner	Spessore Tickness	Nr fori No. holes	Interasse fori Bolt pattern	Ø Fori Ø Holes	Campanatura Total height
AP19FL	300	140	5	6	158	8,5	-
APRILIA							
ETV Capo Nord					1000	2001-2007	FL/FR
ETV CAPO NORD ABS					1000	2001-2007	FL/FR
AP19FLD	300	140	5	6	158	8,5	-
APRILIA							
ETV Capo Nord					1000	2001-2007	FL/FR
ETV CAPO NORD ABS					1000	2001-2007	FL/FR
AP20RID	272	140,5	5	6	158	8,5	-
APRILIA							
ETV Capo Nord					1000	2001-2007	R
AP21RI	190	70	4,5	3	89,5	8,5	-
APRILIA							
SR R FACTORY					50	2005-2014	R
ATLANTIC					125	2003-2011	R
ATLANTIC					200	2003-2004	R
ATLANTIC					250	2005-2006	R
ATLANTIC					300	2010-2011	R
ATLANTIC SPRINT					500	2005-2008	R
AP21RID	190	70	4,5	3	89,5	8,5	-
APRILIA							
SR R FACTORY					50	2005-2014	R
ATLANTIC					125	2003-2011	R
ATLANTIC					200	2003-2004	R
ATLANTIC					250	2005-2006	R
ATLANTIC					300	2010-2011	R
ATLANTIC SPRINT					500	2005-2008	R
AP22RID	240	102	4	5	120	10,5	-
APRILIA							
MXV					450	2009-2010	R
RXV					450	2005-2011	R
SXV					450	2005-2011	R
RXV					550	2005-2011	R
SXV					550	2005-2011	R
BL01RI	240	105	4,5	4	125	10,5	-
BUELL							
M2 CYCLONE					1200	1998-2002	R
S1 LIGHTNING					1200	1998-2002	R
S3 THUNDERBOLT					1200	1998-2002	R
S3T THUNDERBOLT					1200	1998-2002	R
X1 LIGHTNING					1200	1999-2002	R

CODICE P/N	Ø Esterno Ø Outer	Ø Interno Ø Inner	Spessore Tickness	Nr fori No. holes	Interasse fori Bolt pattern	Ø Fori Ø Holes	Campanatura Total height
BL01RID	240	105,5	4,5	4	125	10,5	-
BUELL							
M2 CYCLONE					1200	1998-2002	R
S1 LIGHTNING					1200	1998-2002	R
S3 THUNDERBOLT					1200	1998-2002	R
S3T THUNDERBOLT					1200	1998-2002	R
X1 LIGHTNING					1200	1999-2002	R
BL02FID	367,3	306,5	5	6	406	13	-
BUELL							
XB9R FIREBOLT					984	2002-2006	FR
XB9S LIGHTNING					984	2002-2006	FR
XB9SX CityX					984	2005-2009	FR
1125 CR					1125	2008-2009	FR
1125 R					1125	2008-2009	FR
XB12R FIREBOLT					1200	2004-2009	FR
XB12S LIGHTNING					1200	2003-2008	FR
XB12SS / SCG					1200	2009	FR
XB12SS LIGHTNING LONG					1200	2005-2006	FR
XB12X ULYSSES					1200	2005-2007	FR
XBRR					1340	2006	FR
BL02RID	240	70,4	5	6	101,7	8	-
BUELL							
XB9R FIREBOLT					984	2002-2006	R
XB9S LIGHTNING					984	2002-2006	R
XB9SX CityX					984	2005-2009	R
1125 CR					1125	2008-2009	R
1125 R					1125	2008-2009	R
XB12R FIREBOLT					1200	2004-2009	R
XB12S LIGHTNING					1200	2003-2008	R
XB12SS / SCG					1200	2009	R
XB12SS LIGHTNING LONG					1200	2005-2006	R
XB12X ULYSSES					1200	2005-2007	R
XBRR					1340	2006	R
BW01FI	260	145	5	10	160	13,9	-
BMW							
R 45					450	1978-1980	FL/FR
R 45					450	1981-1986	FL
R 65					650	1978-1980	FL
R 65 LS					650	1982-1988	FL/FR
PARIS DAKAR					800	1981-1987	FL/FR
R 80 GS					800	1988-1990	FL/FR
R 100					1000	1981-1989	R
R 100					1000	1981-1989	FL/FR
R 100 CS					1000	1981-1989	FL/FR
R 100 RS					1000	1976-1980	R
R 100 RS					1000	1976-1980	FL/FR
BW02FI	285	165	5	10	180	13,9	-
BMW							
K 75					750	1984-1996	FL/FR
K 75 C					750	1985-1991	FL/FR
K 75 RT					750	1990-1996	R
K 75 RT					750	1990-1996	FL/FR
K 75 S					750	1985-1988	R
K 75 S					750	1993-1996	R
K 75 S					750	1985-1996	FL/FR
R 80					800	1981-1993	FL/FR
R 80 GS PARIS DAKAR					800	1988-1994	FR

CODICE P/N	Ø Esterno Ø Outer	Ø Interno Ø Inner	Spessore Tickness	Nr fori No. holes	Interasse fori Bolt pattern	Ø Fori Ø Holes	Campanatura Total height
BW02FI	285	165	5	10	180	13,9	-
R 80 R ROADSTER					800	1992-1993	FL/FR
R 80 RT					800	1985-1994	FL/FR
K 100					1000	1983-1989	R
K 100					1000	1983-1989	FL/FR
K 100 LT ABS					1000	1990-1991	R
K 100 LT ABS					1000	1990-1991	FL/FR
K 100 LT LIMITED					1000	1991-1992	R
K 100 LT LIMITED					1000	1991-1992	FL/FR
K 100 RS					1000	1984-1989	R
K 100 RS					1000	1984-1989	FL/FR
K 100 RS 16V					1000	1989-1993	R
K 100 RT					1000	1984-1989	R
K 100 RT					1000	1984-1989	FL/FR
K1					1000	1989-1993	R
R 100 GS					1000	1987-1994	FR
R 100 R					1000	1992-1996	R
R 100 R					1000	1992-1996	FL/FR
R 100 R ROADSTER					1000	1992-1995	FR
R 100 RT					1000	1991-1994	FL/FR
K 1100 LT					1100	1992-2000	R
K 1100 RS					1100	1993-1996	R
R 1100 RS					1100	1994-2001	R
BW03RI	276	174	5	5	198	10,5	-
BMW							
R 850 C					850	1998-2001	R
R 850 GS					850	1998-2007	R
R 850 R					850	1994-2007	R
R 850 RT					850	1995-2001	R
R 850 RT Integral ABS					850	2001-2004	R
R 1100 GS					1100	1994-2001	R
R 1100 R					1100	1995-2001	R
R 1100 RT					1100	1994-2001	R
R 1100 RT ABS					1100	1994-2001	R
R 1100 S					1100	1998-2006	R
R 1100 S BOXER CUP REPLIKA					1100	2003-2006	R
R 1150 GS					1150	1999-2001	R
R 1150 GS (Brembo caliper)					1150	2002-2004	R
R 1150 GS ADVENTURE					1150	2002-2005	R
R 1150 R					1150	2001-2006	R
R 1150 R ROCKSTER					1150	2003-2006	R
R 1150 RS					1150	2001-2005	R
R 1150 RT					1150	2001-2005	R
R 1150 RT ABS					1150	2001-2005	R
BW03RID	276	173	5	5	198	10,5	-
BMW							
R 850 C					850	1998-2001	R
R 850 GS					850	1998-2007	R
R 850 R					850	1994-2007	R
R 850 RT					850	1995-2001	R
R 850 RT Integral ABS					850	2001-2004	R
R 1100 GS					1100	1994-2001	R
R 1100 R					1100	1995-2001	R
R 1100 RT					1100	1994-2001	R
R 1100 RT ABS					1100	1994-2001	R
R 1100 S					1100	1998-2006	R
R 1100 S BOXER CUP REPLIKA					1100	2003-2006	R
R 1150 GS					1150	1999-2001	R
R 1150 GS (Brembo caliper)					1150	2002-2004	R
R 1150 GS ADVENTURE					1150	2002-2005	R
R 1150 R					1150	2001-2006	R
R 1150 R ROCKSTER					1150	2003-2006	R
R 1150 RS					1150	2001-2005	R
R 1150 RT					1150	2001-2005	R
R 1150 RT ABS					1150	2001-2005	R

CODICE P/N	Ø Esterno Ø Outer	Ø Interno Ø Inner	Spessore Tickness	Nr fori No. holes	Interasse fori Bolt pattern	Ø Fori Ø Holes	Campanatura Total height
BW05RI	240	110	5	6	124	6,5	-
APRILIA							
PEGASO FACTORY					650	2007-2009	R
PEGASO I.E.					650	2001-2004	R
PEGASO TRAIL					650	2005-2008	R
BENELLI							
CENTURY RACER					899	2011	R
TRE K					899	2011	R
CAFE RACER					1130	2005-2007	R
CAFE RACER					1130	2011	R
CENTURY RACER					1130	2011	R
TITANIUM					1130	2005-2007	R
TNT					1130	2004-2006	R
TNT R160					1130	2011	R
TNT RS					1130	2005-2007	R
TRE K					1130	2011	R
BMW							
F 650					650	1994-2001	R
F 650 CS					650	2002-2007	R
F 650 GS					650	2001-2007	R
F 650 GS ABS					650	2001-2007	R
F 650 GS DAKAR					650	1999-2007	R
F 650 ST					650	1997-2001	R
G 650 GS					650	2009-2014	R
G 650 GS SERTAO					650	2012-2014	R
HUSQVARNA							
TR 650 STRADA					650	2013-2014	R
TR 650 TERRA					650	2013-2014	R
BW05RID	240	110	5	6	124	6,5	-
APRILIA							
PEGASO FACTORY					650	2007-2009	R
PEGASO I.E.					650	2001-2004	R
PEGASO TRAIL					650	2005-2008	R
BENELLI							
CENTURY RACER					899	2011	R
TRE K					899	2011	R
CAFE RACER					1130	2005-2007	R
CAFE RACER					1130	2011	R
CENTURY RACER					1130	2011	R
TITANIUM					1130	2005-2007	R
TNT					1130	2004-2006	R
TNT R160					1130	2011	R
TNT RS					1130	2005-2007	R
TRE K					1130	2011	R
BMW							
F 650					650	1994-2001	R
F 650 CS					650	2002-2007	R
F 650 GS					650	2001-2007	R
F 650 GS ABS					650	2001-2007	R
F 650 GS DAKAR					650	1999-2007	R
F 650 ST					650	1997-2001	R
G 650 GS					650	2009-2014	R
G 650 GS SERTAO					650	2012-2014	R
HUSQVARNA							
TR 650 STRADA					650	2013-2014	R
TR 650 TERRA					650	2013-2014	R
BW06RI	265	136,5	5	5	160	10,5	-
BMW							
F 650 GS					800	2008-2012	R
F 650 GS ABS					800	2008-2011	R
F 700 GS					800	2013-2014	R
F 800 GS					800	2009-2014	R
F 800 GS ADVENTURE					800	2013-2014	R
F 800 GT					800	2013-2014	R

I codici che terminano in D indicano sempre il disco Wave®
The codes that finish in D indicate always disc Wave®

FL > disco anteriore sinistro / front left disk
FR > disco anteriore destro / front right disk

R > disco posteriore / rear disk

CODICE P/N	Ø Esterno Ø Outer	Ø Interno Ø Inner	Spessore Tickness	Nr fori No. holes	Interasse fori Bolt pattern	Ø Fori Ø Holes	Campanatura Total height
BW06RI	265	136,5	5	5	160	10,5	-
F 800 R					800	2009-2014	R
F 800 S					800	2006-2010	R
F 800 ST					800	2006-2012	R
HP2					1200	2006-2009	R
HP2 Megamoto					1200	2007-2010	R
HP2 SPORT					1200	2008-2011	R
K 1200 R					1200	2004-2008	R
K 1200 S / ABS					1200	2004-2007	R
R 1200 GS					1200	2004-2011	R
R 1200 GS					1200	2012	R
R 1200 GS - ABS					1200	2004-2011	R
R 1200 GS - ABS					1200	2012	R
R 1200 GS ADVENTURE					1200	2006-2014	R
R 1200 R					1200	2006-2013	R
R 1200 RT					1200	2005-2013	R
R 1200 S					1200	2006-2008	R
R 1200 ST					1200	2005-2008	R
R NINE T					1200	2014	R
K 1300 R - ABS					1300	2008-2014	R
K 1300 S					1300	2009-2014	R
HUSQVARNA							
NUDA					900	2012-2013	R
NUDA R					900	2012-2013	R
NUDA R ABS					900	2013	R

CODICE P/N	Ø Esterno Ø Outer	Ø Interno Ø Inner	Spessore Tickness	Nr fori No. holes	Interasse fori Bolt pattern	Ø Fori Ø Holes	Campanatura Total height
BW06RID	265	136,5	5	5	160	10,5	-
BMW							
F 650 GS					800	2008-2012	R
F 650 GS ABS					800	2008-2011	R
F 700 GS					800	2013-2014	R
F 800 GS					800	2009-2014	R
F 800 GS ADVENTURE					800	2013-2014	R
F 800 GT					800	2013-2014	R
F 800 R					800	2009-2014	R
F 800 S					800	2006-2010	R
F 800 ST					800	2006-2012	R
HP2					1200	2006-2009	R
HP2 Megamoto					1200	2007-2010	R
HP2 SPORT					1200	2008-2011	R
K 1200 R					1200	2004-2008	R
K 1200 S / ABS					1200	2004-2007	R
R 1200 GS					1200	2004-2011	R
R 1200 GS					1200	2012	R
R 1200 GS - ABS					1200	2004-2011	R
R 1200 GS - ABS					1200	2012	R
R 1200 GS ADVENTURE					1200	2006-2014	R
R 1200 R					1200	2006-2013	R
R 1200 RT					1200	2005-2013	R
R 1200 S					1200	2006-2008	R
R 1200 ST					1200	2005-2008	R
R NINE T					1200	2014	R
K 1300 R - ABS					1300	2008-2014	R
K 1300 S					1300	2009-2014	R
HUSQVARNA							
NUDA					900	2012-2013	R
NUDA R					900	2012-2013	R
NUDA R ABS					900	2013	R

CODICE P/N	Ø Esterno Ø Outer	Ø Interno Ø Inner	Spessore Tickness	Nr fori No. holes	Interasse fori Bolt pattern	Ø Fori Ø Holes	Campanatura Total height
BY101L/R	305	181	4,6	5	203,3	13,8	-
BMW							
R 1200 GS					1200	2008-2014	FL/FR
R 1200 GS - ABS					1200	2008-2014	FL/FR
R 1200 GS ADVENTURE					1200	2008-2014	FL/FR

CODICE P/N	Ø Esterno Ø Outer	Ø Interno Ø Inner	Spessore Tickness	Nr fori No. holes	Interasse fori Bolt pattern	Ø Fori Ø Holes	Campanatura Total height
BY102L/R	300	105	5	6	120	6,5	-
BMW							
F 700 GS					800	2013-2014	FL/FR
F 800 GS					800	2009-2014	FL/FR
F 800 GS ADVENTURE					800	2013-2014	FL/FR

CODICE P/N	Ø Esterno Ø Outer	Ø Interno Ø Inner	Spessore Tickness	Nr fori No. holes	Interasse fori Bolt pattern	Ø Fori Ø Holes	Campanatura Total height
BY103L/R	305	82,5	5	5	100,5	10,5	-
TRIUMPH							
TIGER					800	2010-2014	FL/FR
TIGER ABS					800	2011-2014	FL/FR
TIGER EXPLORER					1200	2012-2014	FL/FR
TIGER EXPLORER XC					1200	2013-2014	FL/FR

CODICE P/N	Ø Esterno Ø Outer	Ø Interno Ø Inner	Spessore Tickness	Nr fori No. holes	Interasse fori Bolt pattern	Ø Fori Ø Holes	Campanatura Total height
BY104L	320	127	5	6	143	6,5	-
HUSABERG							
FE S					501	1999-2004	FL
FE S					600	1999-2003	FL
KTM							
SMR					450	2004-2013	FL
SMR					525	2004-2005	FL
LC4 EGS					620	1996-2002	FL
LC4 SUPERMOTO					620	1999-2001	FL
LC4 SUPERMOTO					625	2002-2004	FL
SMC					625	2005-2008	FL
DUKE II					640	1999-2002	FL
DUKE-E					640	1998	FL
LC4 ADVENTURE					640	2001-2003	FL
SMC					660	2003-2007	FL
SUPERMOTO					690	2007-2008	FL

CODICE P/N	Ø Esterno Ø Outer	Ø Interno Ø Inner	Spessore Tickness	Nr fori No. holes	Interasse fori Bolt pattern	Ø Fori Ø Holes	Campanatura Total height
BY105L/R	310	132	5	5	150	8,5	-
YAMAHA							
XT Z SUPER TENERE					1200	2010-2014	FL/FR
XT ZE SUPER TENERE					1200	2014	FL/FR

CODICE P/N	Ø Esterno Ø Outer	Ø Interno Ø Inner	Spessore Tickness	Nr fori No. holes	Interasse fori Bolt pattern	Ø Fori Ø Holes	Campanatura Total height
BY106L/R	310	121,5	5	5	142	8,5	-
SUZUKI							
DL V-STROM					650	2007-2012	FL/FR
DL V-STROM ABS					650	2007-2014	FL/FR

CODICE P/N	Ø Esterno Ø Outer	Ø Interno Ø Inner	Spessore Tickness	Nr fori No. holes	Interasse fori Bolt pattern	Ø Fori Ø Holes	Campanatura Total height
BY1501	265	136,5	5	5	160	10,5	-
BMW							
F 800 GS					800	2009-2014	R
F 800 GS ADVENTURE					800	2013-2014	R
R 1200 GS					1200	2008-2012	R
R 1200 GS - ABS					1200	2008-2012	R
R 1200 GS ADVENTURE					1200	2006-2014	R

CODICE P/N	Ø Esterno Ø Outer	Ø Interno Ø Inner	Spessore Tickness	Nr fori No. holes	Interasse fori Bolt pattern	Ø Fori Ø Holes	Campanatura Total height
BY4122	270	101	3,2	6	117	6,5	-
HONDA							
CR E					125	1995-2008	FL
CR R					125	2004-2008	FL
CR E					250	1995-2008	FL

CODICE P/N	Ø Esterno Ø Outer	Ø Interno Ø Inner	Spessore Tickness	Nr fori No. holes	Interasse fori Bolt pattern	Ø Fori Ø Holes	Campanatura Total height
BY4122	270	101	3,2	6	117	6,5	-
CR R					250	2004-2008	FL
CRF R					250	2004-2014	FL
CRF X					250	2004-2012	FL
CRF R					450	2002-2014	FL
CRF X					450	2004-2012	FL
CR E					500	1995-2001	FL
CR R					500	1995-2001	FL
HONDA-HM							
CRF ENDURO					230	2004-2010	FL
CRE F					250	2004-2009	FL
CRE F 250 R					250	2004-2009	FL
CRE F 250 X					250	2008-2011	FL
CRE X					250	2004-2009	FL
CRF F					250	2004-2009	FL
CRF R					250	2008-2013	FL
CRE F 300 X					300	2008-2009	FL
CRE F 450 R ENDURO					450	2004-2008	FL
CRE F 450 X					450	2004-2009	FL
CRF R					450	2004-2014	FL
CRE F 490 X					490	2007	FL
CRE F 500 X					500	2008-2009	FL
CRM F 500 X					500	2011	FL

CODICE P/N	Ø Esterno Ø Outer	Ø Interno Ø Inner	Spessore Tickness	Nr fori No. holes	Interasse fori Bolt pattern	Ø Fori Ø Holes	Campanatura Total height
BY4123	270	120	3,2	4	135	6,5	-
HUSQVARNA							
CR					125	2005-2012	FL
TE					125	2010-2013	FL
WR					125	2006-2012	FL
CR					250	2000-2011	FL
TC					250	2007-2013	FL
TE					250	2004-2013	FL
TXC					250	2011	FL
WR					250	2000-2013	FL
WR					300	2009-2013	FL
TE					310	2010-2012	FL
TXC					310	2011	FL
TC					449	2011-2013	FL
TE					449	2011-2013	FL
TC					450	2007-2010	FL
TE					450	2006-2010	FL
TXC					450	2011-2012	FL
TXC					480	2013	FL
TC					510	2002-2009	FL
TE					510	2006-2010	FL
TXC					510	2009-2010	FL
TE					511	2011-2013	FL
TXC					511	2011-2013	FL

CODICE P/N	Ø Esterno Ø Outer	Ø Interno Ø Inner	Spessore Tickness	Nr fori No. holes	Interasse fori Bolt pattern	Ø Fori Ø Holes	Campanatura Total height
BY4124	270	127,5	3,2	6	143	6,5	-
HUSABERG							
TE					125	2012-2014	FL
FE					250	2013-2014	FL
TE					250	2011-2014	FL
TE					300	2011-2014	FL
FE					350	2013-2014	FL
FE					390	2010-2012	FL
FE					400	2000-2003	FL
FE E					400	2001-2003	FL
FE					450	2009-2014	FL
FX					450	2010	FL
FC					470	2001-2002	FL
FC					501	1999-2003	FL
FE E					501	1999-2004	FL
FE S					501	1999-2004	FL
FE					510	2013-2014	FL
FC					550	2001-2005	FL

CODICE P/N	Ø Esterno Ø Outer	Ø Interno Ø Inner	Spessore Tickness	Nr fori No. holes	Interasse fori Bolt pattern	Ø Fori Ø Holes	Campanatura Total height
BY4124	270	127,5	3,2	6	143	6,5	-
FE E					550	2004-2008	FL
FE					570	2010-2012	FL
FC					600	1999-2003	FL
FE E					600	1999-2002	FL
FE E					650	2001-2008	FL
FX E					650	2001-2005	FL
HUSQVARNA							
TC					125	2014-2015	FL
TE					125	2014	FL
FC					250	2014	FL
FE					250	2014-2015	FL
TC					250	2014	FL
TE					250	2014	FL
TE					300	2014-2015	FL
FC					350	2014-2015	FL
FE					350	2014	FL
FC					450	2014-2015	FL
FE					450	2014-2015	FL
FE					510	2014	FL
KTM							
EXC					125	1998-2015	FL
EXC SIX DAYS					125	2009-2015	FL
GS					125	1993-1997	FL
MX					125	1992	FL
SX					125	1993-2015	FL
SXS					125	2000-2010	FL
SX					144	2007-2010	FL
SX					150	2008-2015	FL
EXC					200	1998-2015	FL
MXC					200	1998-2003	FL
SX					200	2003-2009	FL
XC W					200	2006-2009	FL
EXC					250	1998-2014	FL
EXC E					250	2015	FL
EXC F					250	2003-2015	FL
EXC F SIX DAYS					250	2009-2015	FL
EXC G					250	2004-2009	FL
EXC SIX DAYS					250	2009-2015	FL
GS					250	1993-1997	FL
MX					250	1992	FL
MXC					250	1998-2003	FL
SX					250	1993	FL
SX					250	1998-2015	FL
SX F					250	2003-2015	FL
SXS					250	2003-2010	FL
SXS F					250	2006-2009	FL
XC F					250	2007-2012	FL
XC W					250	2006-2012	FL
EXC					300	1997-2014	FL
EXC E					300	2015	FL
EXC SIX DAYS					300	2009-2015	FL
GS					300	1991-1996	FL
MX					300	1991-1992	FL
MXC					300	1998-2005	FL
SX					300	1993	FL
SX					300	1997-2003	FL
XC					300	2006-2012	FL
XC W					300	2006-2012	FL
EXC F					350	2010-2015	FL
EXC F SIX DAYS					350	2011-2015	FL
GS					350	1993	FL
SX F					350	2011-2015	FL
EXC					380	1998-2002	FL
MXC					380	1998-2001	FL
SX					380	1998-2002	FL
EGS					400	1996-1999	FL
EXC					400	1994-2011	FL
EXC G					400	2004-2006	FL
SX					400	2000-2002	FL
XC W					400	2007-2009	FL
EXC					450	2003-2015	FL

I codici che terminano in D indicano sempre il disco Wave®
The codes that finish in D indicate always disc Wave®

FL > disco anteriore sinistro / front left disk
FR > disco anteriore destro / front right disk
R > disco posteriore / rear disk

CODICE P/N	Ø Esterno Ø Outer	Ø Interno Ø Inner	Spessore Tickness	Nr fori No. holes	Interasse fori Bolt pattern	Ø Fori Ø Holes	Campanatura Total height
BY4124	270	127,5	3,2	6	143	6,5	-
EXC R					450	2008-2009	FL
EXC SIX DAYS					450	2009-2015	FL
MXC					450	2003-2006	FL
SX F					450	2003-2015	FL
SXS					450	2003-2010	FL
SXS F					450	2003-2010	FL
XC					450	2007-2009	FL
XC F					450	2007-2009	FL
XC G					450	2006	FL
XC W					450	2007-2009	FL
EXC					500	2011-2015	FL
EXC SIX DAYS					500	2011-2015	FL
MX					500	1992	FL
SX					500	1993-1995	FL
SX F					505	2007-2009	FL
XC F					505	2007-2009	FL
EXC					520	2000-2002	FL
MXC					520	2001-2002	FL
SX					520	2000-2002	FL
EXC					525	2003-2008	FL
MXC					525	2003-2005	FL
SX					525	2003-2006	FL
XC					525	2006-2008	FL
XC G					525	2006-2008	FL
XC W					525	2006-2008	FL
EXC					530	2010-2011	FL
EXC R					530	2008-2009	FL
EXC SIX DAYS					530	2009	FL
SXC					540	1999-2000	FL
SXS					540	2001-2006	FL
GS					600	1993	FL
LC4 ENDURO					600	1991-1992	FL
MX					600	1992	FL
LC4 SC SUPERCOMP					620	1998-2004	FL
LC4 SC SUPERCOMP					625	2002	FL
SXC					625	2003-2008	FL
BY4125	270	100,5	3,2	4	116	9,5	-
KAWASAKI							
KX					125	2003-2005	FL
KX					250	2003-2005	FL
KX F					250	2004-2005	FL
SUZUKI							
RMZ					250	2004-2006	FL
BY4126	270	109	3,2	4	126	9,5	-
KAWASAKI							
KX					125	2006-2008	FL
KX					250	2006-2008	FL
KX F					250	2006-2015	FL
KLX R					450	2007-2014	FL
KX F					450	2006-2015	FL
BY4127	270	118	3,2	6	134	6,5	-
SUZUKI							
RM					125	1988-2009	FL
RM					250	1989-2012	FL
RMX S					250	1992-1998	FL
DRZ E					400	2000-2008	FL
DRZ S					400	2000-2009	FL

CODICE P/N	Ø Esterno Ø Outer	Ø Interno Ø Inner	Spessore Tickness	Nr fori No. holes	Interasse fori Bolt pattern	Ø Fori Ø Holes	Campanatura Total height
BY4127	270	118	3,2	6	134	6,5	-
YAMAHA							
WR					125	1998-2007	FL
YZ					125	1998-2015	FL
WR					250	1998-2001	FL
WR					250	2003-2007	FL
WR F					250	2001-2013	FL
YZ					250	1998-2014	FL
YZ F					250	2001-2015	FL
WR F					400	1998-2000	FL
YZ F					400	1998-2000	FL
WR F					426	2001-2002	FL
YZ F					426	2000-2002	FL
WR F					450	2003-2014	FL
YZ F					450	2003-2015	FL
BY4128	270	118	3,2	4	134	9,5	-
SUZUKI							
RMZ					250	2007-2015	FL
RMX					450	2010-2012	FL
RMZ					450	2005-2015	FL
BY4501	240	121,5	4	4	140	6,5	-
HONDA							
CR E					125	2002-2008	R
CR R					125	2002-2008	R
CR E					250	2002-2008	R
CR R					250	2002-2008	R
CRF R					250	2004-2014	R
CRF X					250	2004-2012	R
CRF R					450	2002-2014	R
CRF X					450	2004-2012	R
HONDA-HM							
CR E SUPERMOTARD					125	2002-2008	R
CRF R					150	2007-2009	R
CRF ENDURO					230	2004-2010	R
CRF SUPERMOTARD					230	2004-2010	R
CR E SUPERMOTARD					250	2002-2009	R
CRE F					250	2004-2009	R
CRE F 250 R					250	2004-2009	R
CRE F 250 X					250	2008-2011	R
CRE X					250	2004-2009	R
CRF F					250	2004-2009	R
CRF R					250	2008-2013	R
CRF R SUPERMOTARD					250	2004-2008	R
CRF X SUPERMOTARD					250	2004-2008	R
CRE F 300 X					300	2008-2009	R
CRE F 450 R ENDURO					450	2004-2008	R
CRE F 450 X					450	2004-2009	R
CRF R					450	2004-2014	R
CRF SUPERMOTARD					450	2002-2003	R
CRF X SUPERMOTARD					450	2004-2009	R
CRE F 490 X					490	2007	R
CRE F 500 X					500	2008-2009	R
CRM F 500 X					500	2011	R
BY4502	240	116	4	4	133	10,5	-
KAWASAKI							
KX					125	2003-2008	R
KX					250	2003-2008	R
KX F					250	2004-2015	R
KLX R					450	2007-2014	R
KX F					450	2006-2015	R
SUZUKI							
RMZ					250	2004-2006	R

CODICE P/N	Ø Esterno Ø Outer	Ø Interno Ø Inner	Spessore Tickness	Nr fori No. holes	Interasse fori Bolt pattern	Ø Fori Ø Holes	Campanatura Total height
BY4503	240	122	4	4	140	10,5	-
SUZUKI							
RMZ					250	2007-2015	R
RMX					450	2010-2012	R
RMZ					450	2005-2015	R
BY4504	240	112,5	4	4	130	9,5	-
BETA							
RR					250	2005-2009	R
RR 4T ENDURO					350	2011-2012	R
RR 4T ENDURO					400	2005-2012	R
RR 4T ENDURO					450	2005-2012	R
RR 4T ENDURO					498	2012	R
RR 4T ENDURO					520	2010-2011	R
RR 4T ENDURO					525	2005-2009	R
HUSQVARNA							
CR					125	2005-2012	R
WR					125	2006-2012	R
CR					250	2005-2011	R
TC					250	2004-2013	R
TXC					250	2011	R
TXC					310	2011	R
SMR					449	2011-2012	R
TC					449	2011-2013	R
TE					449	2011-2013	R
SMR					450	2010	R
SMR - RR					450	2006-2008	R
TC					450	2007-2010	R
TE					450	2006-2010	R
TXC					450	2011-2012	R
TXC					480	2013	R
SMR					510	2006-2010	R
TC					510	2007-2009	R
TE					510	2006-2010	R
TXC					510	2009-2010	R
SMR					511	2011-2012	R
TE					511	2011-2013	R
TXC					511	2011-2013	R
BY4505	220	110	4	6	125	6,5	-
CCM							
DS					644	2002-2006	R
R30					644	2002-2006	R
GAS GAS							
EC					125	1996-2011	R
EC RACING					125	2013-2014	R
MC					125	1996-2009	R
EC					200	2000-2014	R
HOBBY					200	2007	R
EC					250	1996-2010	R
EC 2T					250	2011-2014	R
EC 4T					250	2011-2014	R
EC F RACING					250	2013-2014	R
EC RACING					250	2012-2013	R
MC					250	1996-2009	R
EC					300	1996-2012	R
EC 2T					300	2013-2014	R
EC F RACING					300	2013-2014	R
EC RACING					300	2012-2013	R
MC					300	1996-2009	R
EC					400	2002	R
EC					400	2006-2007	R
FSE					400	2002	R
MC					400	2002	R
MC					400	2006-2007	R
PAMPERA					400	2006-2007	R

CODICE P/N	Ø Esterno Ø Outer	Ø Interno Ø Inner	Spessore Tickness	Nr fori No. holes	Interasse fori Bolt pattern	Ø Fori Ø Holes	Campanatura Total height
BY4505	220	110	4	6	125	6,5	-
EC					450	2003-2007	R
EC F					450	2013-2014	R
FSE					450	2003-2006	R
FSR					450	2007	R
MC					450	2003	R
MC					450	2007	R
HUSABERG							
TE					125	2012-2014	R
FE					250	2013-2014	R
TE					250	2011-2014	R
TE					300	2011-2014	R
FE					350	2013-2014	R
FE					390	2010-2012	R
FE					400	2000-2003	R
FE E					400	2001-2003	R
FS C					400	2001-2003	R
FS E					400	2001-2003	R
FE					450	2009-2014	R
FS C					450	2003-2008	R
FS E					450	2003-2008	R
FX					450	2010	R
FC					501	1999-2003	R
FE E					501	1999-2004	R
FE S					501	1999-2004	R
FE					510	2013-2014	R
FC					550	2001-2005	R
FE E					550	2004-2008	R
FE					570	2010-2012	R
FS					570	2010	R
FC					600	1999-2003	R
FE E					600	1999-2002	R
FE S					600	1999-2003	R
FE E					650	2001-2008	R
FS C					650	2001-2008	R
FS E					650	2001-2004	R
FS E					650	2005-2008	R
FX E					650	2001-2005	R
HUSQVARNA							
TC					125	2014-2015	R
TE					125	2014	R
FC					250	2014	R
FE					250	2014-2015	R
TC					250	2014	R
TE					250	2014	R
TE					300	2014-2015	R
FC					350	2014-2015	R
FE					350	2014	R
FC					450	2014-2015	R
FE					450	2014-2015	R
FE					510	2014	R
KTM							
EXC					125	1998-2015	R
EXC SIX DAYS					125	2009-2015	R
GS					125	1988-1997	R
MX					125	1988-1992	R
SX					125	1993-1997	R
SX					125	1998-2015	R
SXS					125	2000-2010	R
SX					144	2007-2010	R
SX					150	2008-2015	R
EXC					200	1998-2015	R
MXC					200	1998-2003	R
SX					200	2003-2009	R
XC W					200	2006-2009	R
EXC					250	1998-2014	R
EXC E					250	2015	R
EXC F					250	2003-2015	R
EXC F SIX DAYS					250	2009-2015	R
EXC G					250	2004-2009	R

DISKS / DISCHI

I codici che terminano in D indicano sempre il disco Wave®
The codes that finish in D indicate always disc Wave®

FL > disco anteriore sinistro / front left disk
FR > disco anteriore destro / front right disk
R > disco posteriore / rear disk

CODICE P/N	Ø Esterno Ø Outer	Ø Interno Ø Inner	Spessore Tickness	Nr fori No. holes	Interasse fori Bolt pattern	Ø Fori Ø Holes	Campanatura Total height
BY4505	220	110	4	6	125	6,5	-
EXC SIX DAYS					250 2009-2015		R
GS					250 1988-1997		R
MX					250 1988-1992		R
MXC					250 1998-2003		R
SX					250 1993-2015		R
SX F					250 2003-2015		R
SXS					250 2003-2010		R
SXS F					250 2006-2009		R
XC F					250 2007-2012		R
XC W					250 2006-2012		R
EXC					300 1997-2014		R
EXC E					300 2015		R
EXC SIX DAYS					300 2009-2015		R
GS					300 1991-1996		R
MX					300 1991-1992		R
MXC					300 1998-2005		R
SX					300 1993		R
SX					300 1997-2003		R
XC					300 2006-2012		R
XC W					300 2006-2012		R
EXC F					350 2010-2015		R
EXC F SIX DAYS					350 2011-2015		R
GS					350 1993		R
SX F					350 2011-2015		R
EXC					380 1998-2002		R
MXC					380 1998-2001		R
SX					380 1998-2002		R
EGS					400 1996-1999		R
EXC					400 1994-1999		R
EXC					400 2000-2011		R
EXC G					400 2004-2006		R
SX					400 2000-2002		R
XC W					400 2007-2009		R
EXC					450 2003-2015		R
EXC R					450 2008-2009		R
EXC SIX DAYS					450 2009-2015		R
MXC					450 2003-2006		R
SMR					450 2004-2014		R
SX F					450 2003-2015		R
SXS					450 2003-2010		R
SXS F					450 2003-2010		R
XC					450 2007-2009		R
XC F					450 2007-2009		R
XC G					450 2006		R
XC W					450 2007-2009		R
EXC					500 2011-2015		R
EXC SIX DAYS					500 2011-2015		R
MX					500 1989-1992		R
SX					500 1993-1995		R
SX F					505 2007-2009		R
XC F					505 2007-2009		R
EXC					520 2000-2002		R
MXC					520 2001-2002		R
SX					520 2000-2002		R
EXC					525 2003-2008		R
MXC					525 2003-2005		R
SMR					525 2004-2005		R
SX					525 2003-2006		R
XC					525 2006-2008		R
XC G					525 2006-2008		R
XC W					525 2006-2008		R
EXC					530 2010-2011		R
EXC R					530 2008-2009		R
EXC SIX DAYS					530 2009		R
SXC					540 1999-2000		R
SXS					540 2001-2006		R
SMR					560 2006-2008		R
GS					600 1993		R
LC4 ENDURO					600 1991-1992		R

CODICE P/N	Ø Esterno Ø Outer	Ø Interno Ø Inner	Spessore Tickness	Nr fori No. holes	Interasse fori Bolt pattern	Ø Fori Ø Holes	Campanatura Total height
BY4505	220	110	4	6	125	6,5	-
MX					600 1990-1992		R
LC4 ADVENTURE					620 1997-1998		R
LC4 SC SUPERCOMP					620 1998-2004		R
LC4 SUPERMOTO					620 1999-2001		R
LC4 SC SUPERCOMP					625 2002		R
LC4 SUPERMOTO					625 2002-2004		R
SMC					625 2005-2008		R
SXC					625 2003-2008		R
LC4 ADVENTURE					640 1998-2007		R
LC4 ENDURO					640 1999-2007		R
LC4 SUPERMOTO					640 1998-2007		R
SMC					660 2003-2007		R
BY4506	245	115,5	4	6	133	6,5	-
YAMAHA							
WR					125 2002-2007		R
YZ					125 2002-2015		R
WR					250 2002-2007		R
WR F					250 2002-2013		R
YZ					250 2002-2014		R
YZ F					250 2002-2015		R
WR F					426 2002		R
YZ F					426 2002		R
WR F					450 2003-2014		R
YZ F					450 2003-2015		R
BY701L/R	310	102	5	6	120	8,15	-
SUZUKI							
GSX R					600 2008-2014		FL/FR
GSX R					750 2008-2014		FL/FR
GSX R					1000 2009-2014		FL/FR
BY709L/R	320	176	5	5	203,3	8,6	-
BMW							
S 1000 R					1000 2014		FL/FR
S 1000 RR					1000 2010-2014		FL/FR
BY711L/R	310	132	5	5	150	8,5	-
YAMAHA							
YZF R6					600 2005-2014		FL/FR
BY747L/R	310	94	5	6	110	6,5	12,5
HONDA							
CBR RR					600 2003-2014		FL/FR
CBR RR - ABS					600 2009-2014		FL/FR
CBR RR					1000 2004-2005		FL/FR
BY770L/R	300	80,5	5	5	100	10,5	-
KAWASAKI							
ZX6R NINJA					600 2007-2014		FL/FR
ZX6RR NINJA					600 2005-2006		FL/FR
ZX6R NINJA					636 2005-2006		FL/FR

CODICE P/N	Ø Esterno Ø Outer	Ø Interno Ø Inner	Spessore Tickness	Nr fori No. holes	Interasse fori Bolt pattern	Ø Fori Ø Holes	Campanatura Total height
BY773L/R	320	64	5	6	80	8,5	10
APRILIA							
RSV4 FACTORY					1000 2009-2011		FL/FR
RSV4 FACTORY APRC					1000 2011-2012		FL/FR
RSV4 R					1000 2009-2012		FL/FR
BY778L/R	310	132	5,8	5	150	8,5	-
YAMAHA							
YZF R1					1000 2007-2014		FL/FR
BY790L/R	310	80,5	5	5	100	10,5	-
KAWASAKI							
ZX6R NINJA					636 2013-2015		FL/FR
ZX6R NINJA ABS					636 2013-2015		FL/FR
ZX-10R					1000 2008-2015		FL/FR
ZX-10R ABS					1000 2011-2015		FL/FR
BY795L/R	330	72	5	5	90	8,5	15
DUCATI							
DESMOSEDICI RR					1000 2008-2009		FL/FR
1098					1100 2007-2008		FL/FR
1098 S					1100 2007-2008		FL/FR
1098 S TRICOLORE					1100 2007-2008		FL/FR
1198					1198 2009-2011		FL/FR
PANIGALE					1200 2012-2013		FL/FR
PANIGALE S					1200 2012-2013		FL/FR
PANIGALE S TRICOLORE					1200 2012-2013		FL/FR
BY798L/R	320	94	5	6	110	6,5	15,25
HONDA							
CBR RR					1000 2008-2014		FL/FR
CBR RR - ABS					1000 2009-2014		FL/FR
DC02RI	220	108	5	4	125	8,5	-
DUCATI							
748 BIPOSTO					748 1995-2002		R
748 R					748 2000-2002		R
748 S					748 1999-2002		R
748 SP					748 1995-1997		R
748 SPS					748 1998-1999		R
916 BIPOSTO					916 1994-1998		R
916 SP					916 1994-1996		R
916 SPS					916 1997-1998		R
916 RACING					926 1994-1997		R
996 BIPOSTO					996 1999-2001		R
996 R					996 2001		R
996 S					996 2001		R
996 SPS					996 1999-2000		R
998 BIPOSTO					998 2002-2003		R
998 R					998 2002-2003		R
998 S (four pads)					998 2002-2003		R
998 S (two pads)					998 2002-2003		R

CODICE P/N	Ø Esterno Ø Outer	Ø Interno Ø Inner	Spessore Tickness	Nr fori No. holes	Interasse fori Bolt pattern	Ø Fori Ø Holes	Campanatura Total height
DC02RID	220	108,5	5	4	125	8,5	-
DUCATI							
748 BIPOSTO					748 1995-2002		R
748 R					748 2000-2002		R
748 S					748 1999-2002		R
748 SP					748 1995-1997		R
748 SPS					748 1998-1999		R
916 BIPOSTO					916 1994-1998		R
916 SP					916 1994-1996		R
916 SPS					916 1997-1998		R
916 RACING					926 1994-1997		R
996 BIPOSTO					996 1999-2001		R
996 R					996 2001		R
996 S					996 2001		R
996 SPS					996 1999-2000		R
998 BIPOSTO					998 2002-2003		R
998 R					998 2002-2003		R
998 S (four pads)					998 2002-2003		R
998 S (two pads)					998 2002-2003		R
DC04RI	240	107,5	4	5	125	8,5	-
DUCATI							
749					748 2002-2007		R
749 R					748 2004-2007		R
749 S					748 2003-2007		R
999 BIPOSTO					998 2002-2006		R
999 R					998 2002-2007		R
999 S					998 2002-2007		R
DESMOSEDICI RR					1000 2008-2009		R
DC04RID	240	107,5	5	5	125	8,5	-
DUCATI							
749					748 2002-2007		R
749 R					748 2004-2007		R
749 S					748 2003-2007		R
999 BIPOSTO					998 2002-2006		R
999 R					998 2002-2007		R
999 S					998 2002-2007		R
DESMOSEDICI RR					1000 2008-2009		R
DC05FID	320	176,7	4,6	6	200	13,85	-
DUCATI							
MULTISTRADA DS					1000 2003-2006		FL/FR
MULTISTRADA DS S					1000 2005-2006		FL/FR
MULTISTRADA DS					1100 2007-2009		FL/FR
MULTISTRADA DS S					1100 2007-2009		FL/FR
DC05RI	245	108,3	5	4	125	8,5	-
DUCATI							
HYPERMOTARD 796					800 2010-2012		R
MONSTER 796					800 2011-2014		R
MONSTER S2R					800 2005-2006		R
HYPERMOTARD					820 2013-2014		R
HYPERMOTARD SP					820 2013-2014		R
HYPERSTRADA					820 2013-2014		R
848					850 2008-2010		R
848 EVO					850 2011-2013		R
STREETFIGHTER					850 2012-2014		R
MONSTER S4R					996 2003-2004		R
MONSTER S4R					996 2005-2006		R
MONSTER S2R					1000 2006-2007		R
MULTISTRADA DS					1000 2003-2006		R

I codici che terminano in D indicano sempre il disco Wave®
The codes that finish in D indicate always disc Wave®

FL > disco anteriore sinistro / front left disk
FR > disco anteriore destro / front right disk
R > disco posteriore / rear disk

CODICE P/N	Ø Esterno Ø Outer	Ø Interno Ø Inner	Spessore Tickness	Nr fori No. holes	Interasse fori Bolt pattern	Ø Fori Ø Holes	Campanatura Total height
DC05RI	245	108,3	5	4	125	8,5	-
MULTISTRADA DS S					1000	2005-2006	R
S4R Testastretta MONSTER					1000	2007-2008	R
S4RS Testastretta MONSTER					1000	2006-2008	R
HYPERMOTARD					1100	2007-2009	R
HYPERMOTARD EVO					1100	2010-2012	R
HYPERMOTARD EVO SP					1100	2010-2012	R
HYPERMOTARD S					1100	2007-2009	R
MONSTER 1100					1100	2009-2010	R
MONSTER 1100 S					1100	2009-2010	R
MONSTER EVO					1100	2011-2012	R
MULTISTRADA DS					1100	2007-2009	R
MULTISTRADA DS S					1100	2007-2009	R
DC05RID	245	108,3	5	4	125	8,5	-
DUCATI							
HYPERMOTARD 796					800	2010-2012	R
MONSTER 796					800	2011-2014	R
MONSTER S2R					800	2005-2006	R
HYPERMOTARD					820	2013-2014	R
HYPERMOTARD SP					820	2013-2014	R
HYPERSTRADA					820	2013-2014	R
848					850	2008-2010	R
848 EVO					850	2011-2013	R
STREETFIGHTER					850	2012-2014	R
MONSTER S4R					996	2003-2004	R
MONSTER S4R					996	2005-2006	R
MONSTER S2R					1000	2006-2007	R
MULTISTRADA DS					1000	2003-2006	R
MULTISTRADA DS S					1000	2005-2006	R
S4R Testastretta MONSTER					1000	2007-2008	R
S4RS Testastretta MONSTER					1000	2006-2008	R
HYPERMOTARD					1100	2007-2009	R
HYPERMOTARD EVO					1100	2010-2012	R
HYPERMOTARD EVO SP					1100	2010-2012	R
HYPERMOTARD S					1100	2007-2009	R
MONSTER 1100					1100	2009-2010	R
MONSTER 1100 S					1100	2009-2010	R
MONSTER EVO					1100	2011-2012	R
MULTISTRADA DS					1100	2007-2009	R
MULTISTRADA DS S					1100	2007-2009	R
DC06RID	245	83,5	5	4	102	9,5	-
DUCATI							
1098					1100	2007-2008	R
1098 S					1100	2007-2008	R
1098 S TRICOLORE					1100	2007-2008	R
STREETFIGHTER					1100	2009-2011	R
STREETFIGHTER S					1100	2009-2013	R
1198					1198	2009-2011	R
1198 S					1198	2009-2010	R
1198 SP					1198	2011	R
1098 R					1200	2008-2009	R
GA04FLD	260	108,5	3	6	125	6,5	-
GAS GAS							
EC					125	1996-2011	FL
EC RACING					125	2013-2014	FL
MC					125	1996-2009	FL
EC					200	2000-2014	FL
HOBBY					200	2007	FL
EC					250	1996-2010	FL
EC 2T					250	2011-2014	FL
EC 4T					250	2011-2014	FL
EC F RACING					250	2013-2014	FL
EC RACING					250	2012-2013	FL

CODICE P/N	Ø Esterno Ø Outer	Ø Interno Ø Inner	Spessore Tickness	Nr fori No. holes	Interasse fori Bolt pattern	Ø Fori Ø Holes	Campanatura Total height
GA04FLD	260	108,5	3	6	125	6,5	-
MC					250	1996-2009	FL
EC					300	1996-2012	FL
EC 2T					300	2013-2014	FL
EC F RACING					300	2013-2014	FL
EC RACING					300	2012-2013	FL
MC					300	1996-2009	FL
EC					400	2002	FL
EC					400	2006-2007	FL
FSE					400	2002	FL
MC					400	2002	FL
MC					400	2006-2007	FL
PAMPERA					400	2006-2007	FL
EC					450	2003-2006	FL
EC F					450	2013-2014	FL
FSE					450	2003-2006	FL
FSR					450	2007	FL
MC					450	2003	FL
GL01RID	240	125	4	5	140,5	6,5	-
GILERA							
DNA (Grimeca)					50	2000-2002	FL
DNA (Hengtong)					50	2000-2005	FL
DNA (Grimeca)					125	2001-2002	FL
DNA (Grimeca)					125	2001-2002	R
DNA (Hengtong)					125	2001-2003	FL
DNA (Hengtong)					125	2001-2003	R
RUNNER FX					125	1997-2005	R
RUNNER FX SP (Grimeca)					125	2002-2005	R
RUNNER FX SP (Hengtong)					125	2002-2003	R
RUNNER FX SP scooter					125	1999-2001	R
DNA (Grimeca)					180	2001-2003	FL
DNA (Hengtong)					180	2001-2003	FL
DNA (Hengtong)					180	2001-2003	R
RUNNER FXR 2t (Grimeca)					180	2000-2005	R
RUNNER FXR 2t (Hengtong)					180	2000	R
RUNNER FXR SP 2t (Grimeca)					180	1999-2005	R
HERCULES					200	2002	R
RUNNER SP					200	2001-2002	R
ITALJET							
DRAGSTER					125	1999-2001	R
DRAGSTER					180	1999-2001	R
PIAGGIO							
HEXAGON					125	1993-1997	FL
HEXAGON					125	1993-1997	R
LIBERTY 4T (Rear Drum Model)					125	2013	FL
X9					125	2000-2002	FL/FR
X9					125	2000-2002	R
X9 EVOLUTION (brembo caliper)					125	2003-2004	FL/FR
X9 EVOLUTION (brembo caliper)					125	2003-2004	R
X9 EVOLUTION (HENGTONG CALIPER)					125	2005-2007	FL/FR
X9 EVOLUTION (HENGTONG CALIPER)					125	2005-2007	R
X9 AMALFI					180	2000-2003	FL/FR
X9 AMALFI					180	2000-2003	R
X9 AMALFI					180	2000-2003	FL
X9					200	2002-2003	FL/FR
X9					200	2002-2003	R
X9					200	2002-2003	FL
X9 AMALFI					200	2001-2002	FL/FR
X9 AMALFI					200	2001-2002	R
X9 AMALFI					200	2001-2002	FL
X9 AMALFI					200	2001-2002	R
X9 EVOLUTION					200	2003-2004	FL/FR
X9 EVOLUTION					200	2003-2004	R
X9 EVOLUTION					200	2003-2004	FL
X9					250	2000-2006	FL/FR
X9					250	2000-2006	R
X9					250	2000-2004	FL
X9 EVOLUTION					250	2005-2006	FL/FR
X9 EVOLUTION					250	2005-2006	R
X EVO					400	2007-2011	FL/FR
X8					400	2006-2008	FL/FR

CODICE P/N	Ø Esterno Ø Outer	Ø Interno Ø Inner	Spessore Tickness	Nr fori No. holes	Interasse fori Bolt pattern	Ø Fori Ø Holes	Campanatura Total height
GL06FI	220	58	3	5	80	6,5	-
BENELLI							
ADIVA					150	2000	FL
GILERA							
RUNNER					50	1997-2000	FL
RUNNER DD - SP					50	1997-2004	FL
RUNNER FX					125	1997-2005	FL
RUNNER FX SP (Grimeca)					125	2002-2005	FL
RUNNER FX SP (Hengtong)					125	2002-2003	FL
RUNNER FX SP scooter					125	1999-2001	FL
RUNNER VXR 4t (Grimeca)					125	2001-2003	FL
RUNNER FXR 2t					180	1997-1999	FL
RUNNER FXR 2t (Grimeca)					180	2000-2005	FL
RUNNER FXR 2t (Hengtong)					180	2000	FL
RUNNER FXR 4t (Hengtong)					180	2001	FL
RUNNER FXR SP 2t (Grimeca)					180	1999-2005	FL
RUNNER FXR SP 2t (Hengtong)					180	2002-2003	R
RUNNER VXR 4t (Grimeca)					180	2001-2005	FL
RUNNER VXR 4t (Hengtong)					180	2001	FL
RUNNER VXR 4t (Grimeca)					200	2002-2005	FL
RUNNER VXR 4t (Hengtong)					200	2002-2005	FL
PIAGGIO							
NRG MC2					50	1997	FL
SKIPPER LX					125	1998-2002	FL
SKIPPER ST 4T (grimeca caliper)					125	2000-2004	FL
SKIPPER ST 4T (heng tong caliper)					125	2000-2004	FL
SKIPPER LX					150	1998-2006	FL
SKIPPER LXT					150	1998-2006	FL
SKIPPER ST 4T (grimeca caliper)					150	2000-2004	FL
SKIPPER ST 4T (heng tong caliper)					150	2000-2004	FL
GL06FID	220	58,5	3	5	80	6,5	-
BENELLI							
ADIVA					150	2000	FL
GILERA							
RUNNER					50	1997-2000	FL
RUNNER DD - SP					50	1997-2004	FL
RUNNER FX					125	1997-2005	FL
RUNNER FX SP (Grimeca)					125	2002-2005	FL
RUNNER FX SP (Hengtong)					125	2002-2003	FL
RUNNER FX SP scooter					125	1999-2001	FL
RUNNER VXR 4t (Grimeca)					125	2001-2003	FL
RUNNER FXR 2t					180	1997-1999	FL
RUNNER FXR 2t (Grimeca)					180	2000-2005	FL
RUNNER FXR 2t (Hengtong)					180	2000	FL
RUNNER FXR 4t (Hengtong)					180	2001	FL
RUNNER FXR SP 2t (Grimeca)					180	1999-2005	FL
RUNNER FXR SP 2t (Hengtong)					180	2002-2003	R
RUNNER VXR 4t (Grimeca)					180	2001-2005	FL
RUNNER VXR 4t (Hengtong)					180	2001	FL
RUNNER VXR 4t (Grimeca)					200	2002-2005	FL
RUNNER VXR 4t (Hengtong)					200	2002-2005	FL
PIAGGIO							
NRG MC2					50	1997	FL
SKIPPER LX					125	1998-2002	FL
SKIPPER ST 4T (grimeca caliper)					125	2000-2004	FL
SKIPPER ST 4T (heng tong caliper)					125	2000-2004	FL
SKIPPER LX					150	1998-2006	FL
SKIPPER LXT					150	1998-2006	FL
SKIPPER ST 4T (grimeca caliper)					150	2000-2004	FL
SKIPPER ST 4T (heng tong caliper)					150	2000-2004	FL
GL06RI	175	73	4	5	86	6,5	-
GILERA							
RUNNER DD - SP					50	1997-2004	R
STALKER DD					50	1997-2001	R

CODICE P/N	Ø Esterno Ø Outer	Ø Interno Ø Inner	Spessore Tickness	Nr fori No. holes	Interasse fori Bolt pattern	Ø Fori Ø Holes	Campanatura Total height
GL06RI	175	73	4	5	86	6,5	-
PIAGGIO							
ZIP 4T (Grim./HengTong cal. - Rear Drum)					50	2000-2013	FL
ZIP CAT DT 2T					50	2001-2005	FL
GL06RID	175	73	4	5	86	6,5	-
GILERA							
RUNNER DD - SP					50	1997-2004	R
STALKER DD					50	1997-2001	R
PIAGGIO							
ZIP 4T (Grim./HengTong cal. - Rear Drum)					50	2000-2013	FL
ZIP CAT DT 2T					50	2001-2005	FL
GL07FLOWD	250	58	4	5	80	6,5	-
GILERA							
RUNNER FX					125	2000-2005	FL
RUNNER FX SP (Grimeca)					125	2002-2005	FL
RUNNER FXR SP 2t (Grimeca)					180	1999-2005	FL
RUNNER VXR 4t (Grimeca)					180	2001-2005	FL
HD01FI	292	56	5	5	82,5	8,5	-
HARLEY D.							
XL 883 L SPORTSTER LOW					883	2007-2013	FL
XL 883 N IRON					883	2009-2013	FL
XL 883 R ROADSTER					883	2010-2011	FL/FR
XL 883 R SPORTSTER					883	2000-2003	FL/FR
XL 883 R SPORTSTER R					883	2005-2013	FL/FR
XL 883 SPORTSTER CUSTOM					883	2004-2010	FL
XL SPORTSTER CUSTOM 53					883	2000-2003	FL
XLH 883 SPORTSTER					883	2000-2006	FL
XLH 883 SPORTSTER HUGGER					883	2000-2003	FL
XL 1200 C SPORTSTER CUSTOM					1200	2004-2013	FL
XL 1200 L SPORTSTER LOW					1200	2007-2013	FL
XL 1200 R SPORTSTER ROADSTER					1200	2004-2008	FL/FR
XL 1200 S SPORT					1200	2000-2003	FL
XL 1200 SPORTSTER - FORTY EIGHT					1200	2010-2011	FL
XL 1200 SPORTSTER N NIGHTSTER					1200	2007-2013	FL
XL 1200 V - SEVENTY TWO					1200	2012-2013	FL
XL 1200 X - FORTY EIGHT					1200	2010-2013	FL
XLH 1200 SPORTSTER					1200	2000-2003	FL
XR					1200	2008-2010	FL/FR
XR 1200 X					1200	2010-2012	FL/FR
FLSTC 1340 HERITAGE SOFTAIL CLASSIC					1340	2000-2002	FL
FLSTC FAT BOY					1340	2000-2002	FL
FLHR/I ROAD KING					1450	2000-2007	FL/FR
FLHRCI ROAD KING CLASSIC					1450	2000-2006	FL/FR
FLHT/I ELECTRA GLIDE STANDARD					1450	2000-2006	FL/FR
FLHTCUI ELECTRA GLIDE ULTRA CLASSIC					1450	2000-2006	FL/FR
FLSTC HERITAGE SOFTAIL CLASSIC					1450	2000-2006	FL
FLSTF FAT BOY					1450	2000-2006	FL
FLSTS HERITAGE SPRINGER					1450	2000-2003	FL
FLTR/I ROAD GLIDE					1450	2000-2007	FL/FR
FXD DYNA SUPER GLIDE					1450	2000-2003	FL
FXDL DYNA LOW RIDER					1450	2000-2006	FL
FXDWG DYNA WIDE GLIDE					1450	2000-2005	FL
FXDX DYNA SUPER GLIDE T-SPORT					1450	2000-2005	FL/FR
FXST SOFTAIL STANDARD					1450	2000-2007	FL
FXSTB/I NIGHT TRAIN					1450	2000-2007	FL
FXSTD/I SOFTAIL DEUCE					1450	2000-2006	FL
FXSTS/I SPRINGER SOFTAIL					1450	2000-2006	FL
FLHRC ROAD KING CLASSIC					1584	2007	FL/FR

DISKS / DISCHI

I codici che terminano in D indicano sempre il disco Wave®
The codes that finish in D indicate always disc Wave®

FL > disco anteriore sinistro / front left disk
FR > disco anteriore destro / front right disk
R > disco posteriore / rear disk

CODICE P/N	Ø Esterno Ø Outer	Ø Interno Ø Inner	Spessore Tickness	Nr fori No. holes	Interasse fori Bolt pattern	Ø Fori Ø Holes	Campanatura Total height
HD01FI	292	56	5	5	82,5	8,5	-
FLHT/I ELECTRA GLIDE STANDARD					1584	2007	FL/FR
FLHTCU ELECTRA GLIDE ULTRA CLASSIC					1584	2007-2008	FL/FR
FLHX STREET GLIDE					1584	2006-2007	FL/FR
FLSTB FAT BOY SPECIAL					1584	2010-2013	FL
FLSTB SOFTAIL CROSS BONES					1584	2008-2011	FL
FLSTC HERITAGE SOFTAIL CLASSIC					1584	2007-2014	FL
FLSTF FAT BOY					1584	2007-2014	FL
FLSTN SOFTAIL DELUXE					1584	2005-2014	FL
FLSTSE CVO SOFTAIL CONVERTIBLE					1584	2010-2011	FL
FXCW ROCKER					1584	2008-2009	FL
FXCWC ROCKER C					1584	2008-2013	FL
FXS BLACKLINE					1584	2011-2013	FL
FXSTB NIGHT TRAIN					1584	2008-2010	FL
FXSTC SOFTAIL CUSTOM					1584	2008-2010	FL
FXSTSS CVO SOFTAIL SPRINGER					1584	2009	FL/FR
FLS SOFTAIL SLIM					1690	2012-2014	FL

CODICE P/N	Ø Esterno Ø Outer	Ø Interno Ø Inner	Spessore Tickness	Nr fori No. holes	Interasse fori Bolt pattern	Ø Fori Ø Holes	Campanatura Total height
HD01FL	292	56,3	5	5	82,5	8,5	-
HARLEY D.							
XL 883 L SPORTSTER LOW					883	2007-2013	FL
XL 883 N IRON					883	2009-2013	FL
XL 883 R ROADSTER					883	2010-2011	FL/FR
XL 883 R SPORTSTER					883	2000-2003	FL/FR
XL 883 R SPORTSTER R					883	2005-2013	FL/FR
XL 883 SPORTSTER CUSTOM					883	2004-2010	FL
XL SPORTSTER CUSTOM 53					883	2000-2003	FL
XLH 883 SPORTSTER					883	2000-2006	FL
XLH 883 SPORTSTER HUGGER					883	2000-2003	FL
XL 1200 C SPORTSTER CUSTOM					1200	2004-2013	FL
XL 1200 L SPORTSTER LOW					1200	2007-2013	FL
XL 1200 R SPORTSTER ROADSTER					1200	2004-2008	FL/FR
XL 1200 S SPORT					1200	2000-2003	FL
XL 1200 SPORTSTER - FORTY EIGHT					1200	2010-2011	FL
XL 1200 SPORTSTER N NIGHTSTER					1200	2007-2013	FL
XL 1200 V - SEVENTY TWO					1200	2012-2013	FL
XL 1200 X - FORTY EIGHT					1200	2010-2013	FL
XLH 1200 SPORTSTER					1200	2000-2003	FL
XR					1200	2008-2010	FL/FR
XR 1200 X					1200	2010-2012	FL/FR
FLHR/I ROAD KING					1450	2000-2007	FL/FR
FLHRCI ROAD KING CLASSIC					1450	2000-2006	FL/FR
FLHT/I ELECTRA GLIDE STANDARD					1450	2000-2006	FL/FR
FLHTCUI ELECTRA GLIDE ULTRA CLASSIC					1450	2000-2006	FL/FR
FLSTC HERITAGE SOFTAIL CLASSIC					1450	2000-2006	FL
FLSTF FAT BOY					1450	2000-2006	FL
FLSTS HERITAGE SPRINGER					1450	2000-2003	FL
FLTR/I ROAD GLIDE					1450	2000-2007	FL/FR
FXD DYNA SUPER GLIDE					1450	2000-2003	FL
FXDL DYNA LOW RIDER					1450	2000-2006	FL
FXDWG DYNA WIDE GLIDE					1450	2000-2005	FL
FXDX DYNA SUPER GLIDE T-SPORT					1450	2000-2005	FL/FR
FXST SOFTAIL STANDARD					1450	2000-2007	FL
FXSTB/I NIGHT TRAIN					1450	2000-2007	FL
FXSTD/I SOFTAIL DEUCE					1450	2000-2006	FL
FXSTS/I SPRINGER SOFTAIL					1450	2000-2006	FL
FLHRC ROAD KING CLASSIC					1584	2007	FL/FR
FLHT/I ELECTRA GLIDE STANDARD					1584	2007	FL/FR
FLHTCU ELECTRA GLIDE ULTRA CLASSIC					1584	2007-2008	FL/FR
FLHX STREET GLIDE					1584	2006-2007	FL/FR
FLSTB FAT BOY SPECIAL					1584	2010-2013	FL
FLSTB SOFTAIL CROSS BONES					1584	2008-2011	FL
FLSTC HERITAGE SOFTAIL CLASSIC					1584	2007-2014	FL
FLSTF FAT BOY					1584	2007-2014	FL
FLSTN SOFTAIL DELUXE					1584	2005-2014	FL
FLSTSE CVO SOFTAIL CONVERTIBLE					1584	2010-2011	FL
FXCW ROCKER					1584	2008-2009	FL

CODICE P/N	Ø Esterno Ø Outer	Ø Interno Ø Inner	Spessore Tickness	Nr fori No. holes	Interasse fori Bolt pattern	Ø Fori Ø Holes	Campanatura Total height
HD01FL	292	56,3	5	5	82,5	8,5	-
FXCWC ROCKER C					1584	2008-2013	FL
FXS BLACKLINE					1584	2011-2013	FL
FXSTB NIGHT TRAIN					1584	2008-2010	FL
FXSTC SOFTAIL CUSTOM					1584	2008-2010	FL
FXSTSS CVO SOFTAIL SPRINGER					1584	2009	FL/FR
FLS SOFTAIL SLIM					1690	2012-2014	FL

CODICE P/N	Ø Esterno Ø Outer	Ø Interno Ø Inner	Spessore Tickness	Nr fori No. holes	Interasse fori Bolt pattern	Ø Fori Ø Holes	Campanatura Total height
HD01RI	292	56	5	5	82,5	10,5	-
HARLEY D.							
XL 883 SPORTSTER CUSTOM					883	2004-2010	R
XL SPORTSTER CUSTOM 53					883	2000-2003	R
XLH 883 SPORTSTER					883	2000-2006	R
XLH 883 SPORTSTER HUGGER					883	2000-2003	R
VRSCA V-ROD					1130	2002-2005	R
XL 1200 C SPORTSTER CUSTOM					1200	2004-2013	R
XL 1200 R SPORTSTER ROADSTER					1200	2004-2008	R
XL 1200 S SPORT					1200	2000-2003	R
XL 1200 SPORTSTER - FORTY EIGHT					1200	2010-2011	R
XLH 1200 SPORTSTER					1200	2000-2003	R
FLSTC 1340 HERITAGE SOFTAIL CLASSIC					1340	2000-2002	R
FLSTC FAT BOY					1340	2000-2002	R
FLHR/I ROAD KING					1450	2000-2007	R
FLHRCI ROAD KING CLASSIC					1450	2000-2006	R
FLHT/I ELECTRA GLIDE STANDARD					1450	2000-2006	R
FLHTCUI ELECTRA GLIDE ULTRA CLASSIC					1450	2000-2006	R
FLSTC HERITAGE SOFTAIL CLASSIC					1450	2000-2006	R
FLSTF FAT BOY					1450	2000-2006	R
FLSTS HERITAGE SPRINGER					1450	2000-2003	R
FLTR/I ROAD GLIDE					1450	2000-2007	R
FXD DYNA SUPER GLIDE					1450	2000-2003	R
FXD DYNA SUPER GLIDE					1450	2006-2007	R
FXDC DYNA SUPER GLIDE CUSTOM					1450	2006-2007	R
FXDL DYNA LOW RIDER					1450	2000-2006	R
FXDWG DYNA WIDE GLIDE					1450	2000-2007	R
FXDX DYNA SUPER GLIDE T-SPORT					1450	2000-2005	R
FXST SOFTAIL STANDARD					1450	2000-2007	R
FXSTB/I NIGHT TRAIN					1450	2000-2007	R
FXSTD/I SOFTAIL DEUCE					1450	2000-2006	R
FXSTS/I SPRINGER SOFTAIL					1450	2000-2006	R
FLHRC ROAD KING CLASSIC					1584	2007	R
FLHT/I ELECTRA GLIDE STANDARD					1584	2007	R
FLHTCU ELECTRA GLIDE ULTRA CLASSIC					1584	2007-2008	R
FLHX STREET GLIDE					1584	2006-2007	R
FLSTB FAT BOY SPECIAL					1584	2010-2013	R
FLSTB SOFTAIL CROSS BONES					1584	2008-2011	R
FLSTC HERITAGE SOFTAIL CLASSIC					1584	2007-2014	R
FLSTF FAT BOY					1584	2007-2014	R
FLSTN SOFTAIL DELUXE					1584	2005-2014	R
FLSTSE CVO SOFTAIL CONVERTIBLE					1584	2010-2011	R
FXCW ROCKER					1584	2008-2009	R
FXCWC ROCKER C					1584	2008-2013	R
FXD DYNA SUPER GLIDE					1584	2008-2010	R
FXDC DYNA SUPER GLIDE CUSTOM					1584	2008-2014	R
FXDF FAT BOB					1584	2008-2014	R
FXDL DYNA LOW RIDER					1584	2007-2010	R
FXDWG DYNA WIDE GLIDE					1584	2008-2014	R
FXS BLACKLINE					1584	2011-2013	R
FXSTB NIGHT TRAIN					1584	2008-2010	R
FXSTC SOFTAIL CUSTOM					1584	2008-2010	FL
FXSTSS CVO SOFTAIL SPRINGER					1584	2009	R
FLD SWITCHBACK					1690	2012-2014	R
FLS SOFTAIL SLIM					1690	2012-2014	R

CODICE P/N	Ø Esterno Ø Outer	Ø Interno Ø Inner	Spessore Tickness	Nr fori No. holes	Interasse fori Bolt pattern	Ø Fori Ø Holes	Campanatura Total height
HD01RL	292	56	5	5	82,5	10,5	-
HARLEY D.							
XL 883 SPORTSTER CUSTOM					883	2004-2010	R
XL SPORTSTER CUSTOM 53					883	2000-2003	R
XLH 883 SPORTSTER					883	2000-2006	R
XLH 883 SPORTSTER HUGGER					883	2000-2003	R
VRSCA V-ROD					1130	2002-2005	R
XL 1200 C SPORTSTER CUSTOM					1200	2004-2013	R
XL 1200 R SPORTSTER ROADSTER					1200	2004-2008	R
XL 1200 S SPORT					1200	2000-2003	R
XLH 1200 SPORTSTER					1200	2000-2003	R
FLHR/I ROAD KING					1450	2000-2007	R
FLHRCI ROAD KING CLASSIC					1450	2000-2006	R
FLHT/I ELECTRA GLIDE STANDARD					1450	2000-2006	R
FLHTCUI ELECTRA GLIDE ULTRA CLASSIC					1450	2000-2006	R
FLSTC HERITAGE SOFTAIL CLASSIC					1450	2000-2006	R
FLSTF FAT BOY					1450	2000-2006	R
FLSTS HERITAGE SPRINGER					1450	2000-2003	R
FLTR/I ROAD GLIDE					1450	2000-2007	R
FXD DYNA SUPER GLIDE					1450	2000-2003	R
FXD DYNA SUPER GLIDE					1450	2006-2007	R
FXDC DYNA SUPER GLIDE CUSTOM					1450	2006-2007	R
FXDL DYNA LOW RIDER					1450	2000-2006	R
FXDWG DYNA WIDE GLIDE					1450	2000-2007	R
FXDX DYNA SUPER GLIDE T-SPORT					1450	2000-2005	R
FXST SOFTAIL STANDARD					1450	2000-2007	R
FXSTB/I NIGHT TRAIN					1450	2000-2007	R
FXSTD/I SOFTAIL DEUCE					1450	2000-2006	R
FXSTS/I SPRINGER SOFTAIL					1450	2000-2006	R
FLHRC ROAD KING CLASSIC					1584	2007	R
FLHT/I ELECTRA GLIDE STANDARD					1584	2007	R
FLHTCU ELECTRA GLIDE ULTRA CLASSIC					1584	2007-2008	R
FLHX STREET GLIDE					1584	2006-2007	R
FLSTB FAT BOY SPECIAL					1584	2010-2013	R
FLSTB SOFTAIL CROSS BONES					1584	2008-2011	R
FLSTC HERITAGE SOFTAIL CLASSIC					1584	2007-2014	R
FLSTF FAT BOY					1584	2007-2014	R
FLSTN SOFTAIL DELUXE					1584	2005-2014	R
FLSTSE CVO SOFTAIL CONVERTIBLE					1584	2010-2011	R
FXCW ROCKER					1584	2008-2009	R
FXCWC ROCKER C					1584	2008-2013	R
FXD DYNA SUPER GLIDE					1584	2008-2010	R
FXDC DYNA SUPER GLIDE CUSTOM					1584	2008-2014	R
FXDF FAT BOB					1584	2008-2014	R
FXDL DYNA LOW RIDER					1584	2007-2010	R
FXDWG DYNA WIDE GLIDE					1584	2008-2014	R
FXS BLACKLINE					1584	2011-2013	R
FXSTB NIGHT TRAIN					1584	2008-2010	R
FXSTC SOFTAIL CUSTOM					1584	2008-2010	R
FXSTSS CVO SOFTAIL SPRINGER					1584	2009	R
FLS SOFTAIL SLIM					1690	2012-2014	R

CODICE P/N	Ø Esterno Ø Outer	Ø Interno Ø Inner	Spessore Tickness	Nr fori No. holes	Interasse fori Bolt pattern	Ø Fori Ø Holes	Campanatura Total height
HD03FLD	292	50,5	5	5	82,5	8,5	-
HARLEY D.							
XLH 883 SPORTSTER					883	1985-1999	FL
XLH 1200 SPORTSTER					1200	1987-1999	FL
FLH 1340 ELECTRA GLIDE					1340	1982-1983	FL
FLSTC 1340 HERITAGE SOFTAIL CLASSIC					1340	1989-1999	FL
FLSTC FAT BOY					1340	1989-1999	FL
FLSTC HERITAGE SOFTAIL CLASSIC					1340	1989-1999	FL
FLSTF FAT BOY					1340	1989-1999	FL
FXLR 1340 LOW RIDER CUSTOM					1340	1987-1999	FL
FXR 1340 SUPER GLIDE					1340	1982-1999	FL
FXRS 1340 LOW RIDER SPORT					1340	1987-1999	FL
FXRT 1340 SPORT GLIDE					1340	1987-1999	FL
FXSTC SOFTAIL CUSTOM					1340	1989-1999	FL
FXSTS 1340 SPRINGER SOFTAIL					1340	1989-1999	FL
FLHR/I ROAD KING					1450	1998-1999	FL
FLHT/I ELECTRA GLIDE STANDARD					1450	1998-1999	FL
FLTR/I ROAD GLIDE					1450	1998-1999	FL
FXDWG DYNA WIDE GLIDE					1450	1993-1999	FL
FXRS SPORT GLIDE					1450	1984-1986	FL

CODICE P/N	Ø Esterno Ø Outer	Ø Interno Ø Inner	Spessore Tickness	Nr fori No. holes	Interasse fori Bolt pattern	Ø Fori Ø Holes	Campanatura Total height
HD03RLD	292	50,5	5	5	82,5	10,5	-
HARLEY D.							
FLH 1340 ELECTRA GLIDE					1340	1982-1983	R
FLSTC 1340 HERITAGE SOFTAIL CLASSIC					1340	1989-1999	R
FLSTC FAT BOY					1340	1989-1999	R
FLSTC HERITAGE SOFTAIL CLASSIC					1340	1989-1999	R
FLSTF FAT BOY					1340	1989-1999	R
FXLR 1340 LOW RIDER CUSTOM					1340	1987-1999	R
FXR 1340 SUPER GLIDE					1340	1982-1999	R
FXRS 1340 LOW RIDER SPORT					1340	1987-1999	R
FXRS LOW RIDER SPORT EDITION					1340	1987-1999	R
FXRT 1340 SPORT GLIDE					1340	1987-1999	R
FXSTC SOFTAIL CUSTOM					1340	1989-1999	R
FXSTS 1340 SPRINGER SOFTAIL					1340	1989-1999	R
FLHR/I ROAD KING					1450	1998-1999	R
FLHT/I ELECTRA GLIDE STANDARD					1450	1998-1999	R
FLTR/I ROAD GLIDE					1450	1998-1999	R
FXDWG DYNA WIDE GLIDE					1450	1993-1999	R
FXRS SPORT GLIDE					1450	1984-1986	R

CODICE P/N	Ø Esterno Ø Outer	Ø Interno Ø Inner	Spessore Tickness	Nr fori No. holes	Interasse fori Bolt pattern	Ø Fori Ø Holes	Campanatura Total height
HD05FLD	292	56	5	5	82,5	8,5	-
HARLEY D.							
XL 883 L SPORTSTER LOW					883	2007-2013	FL
XL 883 N IRON					883	2009-2013	FL
XL 883 R ROADSTER					883	2010-2011	FL
XL 883 R SPORTSTER					883	2000-2003	FL
XL 883 R SPORTSTER R					883	2005-2013	FL
XL 883 SPORTSTER CUSTOM					883	2004-2010	FL
XL SPORTSTER CUSTOM 53					883	2000-2003	FL
XLH 883 SPORTSTER					883	2000-2006	FL
XLH 883 SPORTSTER HUGGER					883	2000-2003	FL
XL 1200 C SPORTSTER CUSTOM					1200	2004-2013	FL
XL 1200 L SPORTSTER LOW					1200	2007-2013	FL
XL 1200 R SPORTSTER ROADSTER					1200	2004-2008	FL
XL 1200 SPORTSTER - FORTY EIGHT					1200	2010-2011	FL
XL 1200 SPORTSTER N NIGHTSTER					1200	2007-2013	FL
XL 1200 V - SEVENTY TWO					1200	2012-2013	FL
XL 1200 X - FORTY EIGHT					1200	2010-2013	FL
XLH 1200 SPORTSTER					1200	2000-2003	FL
XR					1200	2008-2010	FL
XR 1200 X					1200	2010-2012	FL
FLSTC 1340 HERITAGE SOFTAIL CLASSIC					1340	2000-2002	FL
FLSTC FAT BOY					1340	2000-2002	FL
FLHR/I ROAD KING					1450	2000-2007	FL
FLHRCI ROAD KING CLASSIC					1450	2000-2006	FL
FLHT/I ELECTRA GLIDE STANDARD					1450	2000-2006	FL
FLHTCUI ELECTRA GLIDE ULTRA CLASSIC					1450	2000-2006	FL
FLSTC HERITAGE SOFTAIL CLASSIC					1450	2000-2006	FL
FLSTF FAT BOY					1450	2000-2006	FL
FLSTF/I FAT BOY					1450	2003-2006	FL
FLSTS HERITAGE SPRINGER					1450	2000-2003	FL
FLTR/I ROAD GLIDE					1450	2000-2007	FL
FXD DYNA SUPER GLIDE					1450	2000-2003	FL
FXDL DYNA LOW RIDER					1450	2000-2006	FL
FXDWG DYNA WIDE GLIDE					1450	2000-2005	FL
FXDX DYNA SUPER GLIDE T-SPORT					1450	2000-2005	FL
FXST SOFTAIL STANDARD					1450	2000-2007	FL
FXSTB/I NIGHT TRAIN					1450	2000-2007	FL
FXSTD/I SOFTAIL DEUCE					1450	2000-2006	FL
FXSTS/I SPRINGER SOFTAIL					1450	2000-2006	FL
FLHRC ROAD KING CLASSIC					1584	2007	FL
FLHT/I ELECTRA GLIDE STANDARD					1584	2007	FL
FLHTCU ELECTRA GLIDE ULTRA CLASSIC					1584	2007-2008	FL
FLHX STREET GLIDE					1584	2006-2007	FL
FLSTB FAT BOY SPECIAL					1584	2010-2013	FL
FLSTB SOFTAIL CROSS BONES					1584	2008-2011	FL
FLSTC HERITAGE SOFTAIL CLASSIC					1584	2007-2014	FL

DISKS / DISCHI

I codici che terminano in D indicano sempre il disco Wave®
The codes that finish in D indicate always disc Wave®

FL > disco anteriore sinistro / front left disk
FR > disco anteriore destro / front right disk
R > disco posteriore / rear disk

CODICE P/N	Ø Esterno Ø Outer	Ø Interno Ø Inner	Spessore Tickness	Nr fori No. holes	Interasse fori Bolt pattern	Ø Fori Ø Holes	Campanatura Total height
HD05FLD	292	56	5	5	82,5	8,5	-
FLSTF FAT BOY					1584	2007-2014	FL
FLSTN SOFTAIL DELUXE					1584	2005-2014	FL
FLSTSE CVO SOFTAIL CONVERTIBLE					1584	2010-2011	FL
FXCW ROCKER					1584	2008-2009	FL
FXCWC ROCKER C					1584	2008-2013	FL
FXS BLACKLINE					1584	2011-2013	FL
FXSTB NIGHT TRAIN					1584	2008-2010	FL
FXSTC SOFTAIL CUSTOM					1584	2008-2010	FL
FXSTSS CVO SOFTAIL SPRINGER					1584	2009	FL/FR
FLS SOFTAIL SLIM					1690	2012-2014	FL

CODICE P/N	Ø Esterno Ø Outer	Ø Interno Ø Inner	Spessore Tickness	Nr fori No. holes	Interasse fori Bolt pattern	Ø Fori Ø Holes	Campanatura Total height
HD05RLD	292	56	5	5	82,5	10,5	-
HARLEY D.							
FLSTC 1340 HERITAGE SOFTAIL CLASSIC					1340	2000-2002	R
FLSTC FAT BOY					1340	2000-2002	R
FLHR/I ROAD KING					1450	2000-2007	R
FLHRCI ROAD KING CLASSIC					1450	2000-2006	R
FLHT/I ELECTRA GLIDE STANDARD					1450	2000-2006	R
FLHTCUI ELECTRA GLIDE ULTRA CLASSIC					1450	2000-2006	R
FLSTC HERITAGE SOFTAIL CLASSIC					1450	2000-2006	R
FLSTF FAT BOY					1450	2000-2006	R
FLSTF/I FAT BOY					1450	2003-2006	R
FLSTS HERITAGE SPRINGER					1450	2000-2003	R
FLTR/I ROAD GLIDE					1450	2000-2007	R
FXD DYNA SUPER GLIDE					1450	2000-2003	R
FXD DYNA SUPER GLIDE					1450	2006-2007	R
FXDC DYNA SUPER GLIDE CUSTOM					1450	2006-2007	R
FXDL DYNA LOW RIDER					1450	2000-2006	R
FXDWG DYNA WIDE GLIDE					1450	2000-2007	R
FXDX DYNA SUPER GLIDE T-SPORT					1450	2000-2005	R
FXST SOFTAIL STANDARD					1450	2000-2007	R
FXSTB/I NIGHT TRAIN					1450	2000-2007	R
FXSTD/I SOFTAIL DEUCE					1450	2000-2006	R
FLHRC ROAD KING CLASSIC					1584	2007	R
FLHT/I ELECTRA GLIDE STANDARD					1584	2007	R
FLHTCU ELECTRA GLIDE ULTRA CLASSIC					1584	2007-2008	R
FLHX STREET GLIDE					1584	2006-2007	R
FLSTB FAT BOY SPECIAL					1584	2010-2013	R
FLSTB SOFTAIL CROSS BONES					1584	2008-2011	R
FLSTC HERITAGE SOFTAIL CLASSIC					1584	2007-2014	R
FLSTF FAT BOY					1584	2007-2014	R
FLSTN SOFTAIL DELUXE					1584	2005-2014	R
FLSTSE CVO SOFTAIL CONVERTIBLE					1584	2010-2011	R
FXCW ROCKER					1584	2008-2009	R
FXCWC ROCKER C					1584	2008-2013	R
FXD DYNA SUPER GLIDE					1584	2008-2010	R
FXDC DYNA SUPER GLIDE CUSTOM					1584	2008-2014	R
FXDF FAT BOB					1584	2008-2014	R
FXDL DYNA LOW RIDER					1584	2007-2010	R
FXDWG DYNA WIDE GLIDE					1584	2008-2014	R
FXS BLACKLINE					1584	2011-2013	R
FXSTB NIGHT TRAIN					1584	2008-2010	R
FXSTC SOFTAIL CUSTOM					1584	2008-2010	R
FXSTSS CVO SOFTAIL SPRINGER					1584	2009	R
FLD SWITCHBACK					1690	2012-2014	R
FLS SOFTAIL SLIM					1690	2012-2014	R

CODICE P/N	Ø Esterno Ø Outer	Ø Interno Ø Inner	Spessore Tickness	Nr fori No. holes	Interasse fori Bolt pattern	Ø Fori Ø Holes	Campanatura Total height
HD07FLD	292	50,5	5	5	82,5	8,5	-
HARLEY D.							
FXRT 1340 SPORT GLIDE					1340	1987-1999	FR
FXSTS 1340 SPRINGER SOFTAIL					1340	1989-1999	FR
FLHR/I ROAD KING					1450	1998-1999	FR
FLHT/I ELECTRA GLIDE STANDARD					1450	1998-1999	FR
FLTR/I ROAD GLIDE					1450	1998-1999	FR

CODICE P/N	Ø Esterno Ø Outer	Ø Interno Ø Inner	Spessore Tickness	Nr fori No. holes	Interasse fori Bolt pattern	Ø Fori Ø Holes	Campanatura Total height
HD09FLD	292	56	5	5	82,5	8,5	-
HARLEY D.							
XL 883 R ROADSTER					883	2010-2011	FR
XL 883 R SPORTSTER					883	2000-2003	FR
XL 883 R SPORTSTER R					883	2005-2013	FR
XL 883 SPORTSTER CUSTOM					883	2004-2010	FR
XL 1200 R SPORTSTER ROADSTER					1200	2004-2008	FR
XR					1200	2008-2010	FR
XR 1200 X					1200	2010-2012	FR
FLHR/I ROAD KING					1450	2000-2007	FR
FLHRCI ROAD KING CLASSIC					1450	2000-2006	FR
FLHT/I ELECTRA GLIDE STANDARD					1450	2000-2006	FR
FLHTCUI ELECTRA GLIDE ULTRA CLASSIC					1450	2000-2006	FR
FLTR/I ROAD GLIDE					1450	2000-2007	FR
FXD DYNA SUPER GLIDE					1450	2000-2003	FR
FXDX DYNA SUPER GLIDE T-SPORT					1450	2000-2005	FR
FLHRC ROAD KING CLASSIC					1584	2007	FR
FLHT/I ELECTRA GLIDE STANDARD					1584	2007	FR
FLHTCU ELECTRA GLIDE ULTRA CLASSIC					1584	2007-2008	FR
FLHX STREET GLIDE					1584	2006-2008	FR

CODICE P/N	Ø Esterno Ø Outer	Ø Interno Ø Inner	Spessore Tickness	Nr fori No. holes	Interasse fori Bolt pattern	Ø Fori Ø Holes	Campanatura Total height
HD292R	292	50,5	5	5	82,5	8,5	-
HARLEY D.							
XLH 883 SPORTSTER					883	1985-1999	FL
XLH 1200 SPORTSTER					1200	1987-1999	FL
FLH 1340 ELECTRA GLIDE					1340	1982-1983	FL
FLSTC FAT BOY					1340	1989-1999	FL
FLSTC HERITAGE SOFTAIL CLASSIC					1340	1989-1999	FL
FLSTF FAT BOY					1340	1989-1999	FL
FXLR 1340 LOW RIDER CUSTOM					1340	1987-1999	FL
FXR 1340 SUPER GLIDE					1340	1982-1999	FL
FXRS 1340 LOW RIDER SPORT					1340	1987-1999	FL
FXRT 1340 SPORT GLIDE					1340	1987-1999	FL
FXSTC SOFTAIL CUSTOM					1340	1989-1993	FL
FXSTC SOFTAIL CUSTOM					1340	1995-1999	FL
FXSTC SOFTAIL CUSTOM					1340	1994	R
FXSTS 1340 SPRINGER SOFTAIL					1340	1989-1999	FL
FLHR/I ROAD KING					1450	1998-1999	FL/FR
FLHT/I ELECTRA GLIDE STANDARD					1450	1998-1999	FL/FR
FLTR/I ROAD GLIDE					1450	1998-1999	FL/FR
FXDWG DYNA WIDE GLIDE					1450	1993-1999	FL
FXRS SPORT GLIDE					1450	1984-1986	FL

CODICE P/N	Ø Esterno Ø Outer	Ø Interno Ø Inner	Spessore Tickness	Nr fori No. holes	Interasse fori Bolt pattern	Ø Fori Ø Holes	Campanatura Total height
HD292RFL	292	50,5	5	5	82,5	8,5	-
HARLEY D.							
XLH 883 SPORTSTER					883	1985-1999	R
XLH 1200 SPORTSTER					1200	1987-1999	R
FLSTC HERITAGE SOFTAIL CLASSIC					1340	1989-1999	R
FXLR 1340 LOW RIDER CUSTOM					1340	1987-1999	R
FXR 1340 SUPER GLIDE					1340	1982-1999	R
FXRS 1340 LOW RIDER SPORT					1340	1987-1999	R
FXRT 1340 SPORT GLIDE					1340	1987-1999	R
FXSTC SOFTAIL CUSTOM					1340	1989-1999	R
FXSTS 1340 SPRINGER SOFTAIL					1340	1989-1999	R
FLHR/I ROAD KING					1450	1998-1999	R
FLTR/I ROAD GLIDE					1450	1998-1999	R
FXDWG DYNA WIDE GLIDE					1450	1993-1999	R
FXRS SPORT GLIDE					1450	1984-1986	R

CODICE P/N	Ø Esterno Ø Outer	Ø Interno Ø Inner	Spessore Tickness	Nr fori No. holes	Interasse fori Bolt pattern	Ø Fori Ø Holes	Campanatura Total height
HD292SFL	292	50,5	5	5	82,5	10,5	-
HARLEY D.							
XLH 883 SPORTSTER					883	1985-1999	R
XLH 1200 SPORTSTER					1200	1987-1999	R
FLH 1340 ELECTRA GLIDE					1340	1982-1983	R
FLSTC 1340 HERITAGE SOFTAIL CLASSIC					1340	1989-1999	R

CODICE P/N	Ø Esterno Ø Outer	Ø Interno Ø Inner	Spessore Tickness	Nr fori No. holes	Interasse fori Bolt pattern	Ø Fori Ø Holes	Campanatura Total height
HD292SFL	292	50,5	5	5	82,5	10,5	-
FLSTC FAT BOY					1340	1989-1999	R
FLSTC HERITAGE SOFTAIL CLASSIC					1340	1989-1999	R
FLSTF FAT BOY					1340	1989-1999	R
FXLR 1340 LOW RIDER CUSTOM					1340	1987-1999	R
FXR 1340 SUPER GLIDE					1340	1982-1999	R
FXRS 1340 LOW RIDER SPORT					1340	1987-1999	R
FXRT 1340 SPORT GLIDE					1340	1987-1999	R
FXSTC SOFTAIL CUSTOM					1340	1989-1999	R
FXSTS 1340 SPRINGER SOFTAIL					1340	1989-1999	R
FLHR/I ROAD KING					1450	1998-1999	R
FLHT/I ELECTRA GLIDE STANDARD					1450	1998-1999	R
FLTR/I ROAD GLIDE					1450	1998-1999	R
FXDWG DYNA WIDE GLIDE					1450	1993-1999	R
FXRS SPORT GLIDE					1450	1984-1986	R

CODICE P/N	Ø Esterno Ø Outer	Ø Interno Ø Inner	Spessore Tickness	Nr fori No. holes	Interasse fori Bolt pattern	Ø Fori Ø Holes	Campanatura Total height
HDF	292	50,5	5	5	82,5	8,5	-
HARLEY D.							
XLH 883 SPORTSTER					883	1985-1999	FL
XLH 1200 SPORTSTER					1200	1987-1999	FL
FLH 1340 ELECTRA GLIDE					1340	1982-1983	FL
FLSTC 1340 HERITAGE SOFTAIL CLASSIC					1340	1989-1999	FL
FLSTC FAT BOY					1340	1989-1999	FL
FLSTC HERITAGE SOFTAIL CLASSIC					1340	1989-1999	FL
FLSTF FAT BOY					1340	1989-1999	FL
FXLR 1340 LOW RIDER CUSTOM					1340	1987-1999	FL
FXR 1340 SUPER GLIDE					1340	1982-1999	FL
FXRS 1340 LOW RIDER SPORT					1340	1987-1999	FL
FXRT 1340 SPORT GLIDE					1340	1987-1999	FL
FXSTC 1340 SOFTAIL CUSTOM					1340	1989-1999	FL
FXSTS 1340 SPRINGER SOFTAIL					1340	1989-1999	FL
FLHR/I ROAD KING					1450	1998-1999	FL/FR
FLHT/I ELECTRA GLIDE STANDARD					1450	1998-1999	FL/FR
FLTR/I ROAD GLIDE					1450	1998-1999	FL/FR
FXDWG DYNA WIDE GLIDE					1450	1993-1999	FL
FXRS SPORT GLIDE					1450	1984-1986	FL

CODICE P/N	Ø Esterno Ø Outer	Ø Interno Ø Inner	Spessore Tickness	Nr fori No. holes	Interasse fori Bolt pattern	Ø Fori Ø Holes	Campanatura Total height
HDFFL	292	50,5	5	5	82,5	8,5	-
HARLEY D.							
XLH 883 SPORTSTER					883	1985-1999	FL
XLH 1200 SPORTSTER					1200	1987-1999	FL
FLH 1340 ELECTRA GLIDE					1340	1982-1983	FL
FLSTC FAT BOY					1340	1989-1999	FL
FLSTC HERITAGE SOFTAIL CLASSIC					1340	1989-1999	FL
FLSTF FAT BOY					1340	1989-1999	FL
FXLR 1340 LOW RIDER CUSTOM					1340	1987-1999	FL
FXR 1340 SUPER GLIDE					1340	1982-1999	FL
FXRS 1340 LOW RIDER SPORT					1340	1987-1999	FL
FXRT 1340 SPORT GLIDE					1340	1987-1999	FL
FXSTC SOFTAIL CUSTOM					1340	1989-1993	FL
FXSTC SOFTAIL CUSTOM					1340	1995-1999	FL
FXSTC SOFTAIL CUSTOM					1340	1994	R
FXSTS 1340 SPRINGER SOFTAIL					1340	1989-1999	FL
FLHR/I ROAD KING					1450	1998-1999	FL/FR
FLHT/I ELECTRA GLIDE STANDARD					1450	1998-1999	FL/FR
FLTR/I ROAD GLIDE					1450	1998-1999	FL/FR
FXDWG DYNA WIDE GLIDE					1450	1993-1999	FL
FXRS SPORT GLIDE					1450	1984-1986	FL

CODICE P/N	Ø Esterno Ø Outer	Ø Interno Ø Inner	Spessore Tickness	Nr fori No. holes	Interasse fori Bolt pattern	Ø Fori Ø Holes	Campanatura Total height
HDR	292	50,5	5	5	82,5	10,5	-
HARLEY D.							
XLH 883 SPORTSTER					883	1985-1999	R
XLH 1200 SPORTSTER					1200	1987-1999	R
FLH 1340 ELECTRA GLIDE					1340	1982-1983	R
FLSTC 1340 HERITAGE SOFTAIL CLASSIC					1340	1989-1999	R

CODICE P/N	Ø Esterno Ø Outer	Ø Interno Ø Inner	Spessore Tickness	Nr fori No. holes	Interasse fori Bolt pattern	Ø Fori Ø Holes	Campanatura Total height
HDR	292	50,5	5	5	82,5	10,5	-
FLSTC FAT BOY					1340	1989-1999	R
FLSTC HERITAGE SOFTAIL CLASSIC					1340	1989-1999	R
FLSTF FAT BOY					1340	1989-1999	R
FXLR 1340 LOW RIDER CUSTOM					1340	1987-1999	R
FXR 1340 SUPER GLIDE					1340	1982-1999	R
FXRS 1340 LOW RIDER SPORT					1340	1987-1999	R
FXRT 1340 SPORT GLIDE					1340	1987-1999	R
FXSTC SOFTAIL CUSTOM					1340	1989-1999	R
FXSTS 1340 SPRINGER SOFTAIL					1340	1989-1999	R
FLHR/I ROAD KING					1450	1998-1999	R
FLHT/I ELECTRA GLIDE STANDARD					1450	1998-1999	R
FLTR/I ROAD GLIDE					1450	1998-1999	R
FXDWG DYNA WIDE GLIDE					1450	1993-1999	R
FXRS SPORT GLIDE					1450	1984-1986	R

CODICE P/N	Ø Esterno Ø Outer	Ø Interno Ø Inner	Spessore Tickness	Nr fori No. holes	Interasse fori Bolt pattern	Ø Fori Ø Holes	Campanatura Total height
HDRFL	292	50,5	5	5	82,5	10,5	-
HARLEY D.							
XLH 883 SPORTSTER					883	1985-1999	R
XLH 1200 SPORTSTER					1200	1987-1999	R
FLH 1340 ELECTRA GLIDE					1340	1982-1983	R
FLSTC 1340 HERITAGE SOFTAIL CLASSIC					1340	1989-1999	R
FLSTC FAT BOY					1340	1989-1999	R
FLSTC HERITAGE SOFTAIL CLASSIC					1340	1989-1999	R
FLSTF FAT BOY					1340	1989-1999	R
FXLR 1340 LOW RIDER CUSTOM					1340	1987-1999	R
FXR 1340 SUPER GLIDE					1340	1982-1999	R
FXRS 1340 LOW RIDER SPORT					1340	1987-1999	R
FXRT 1340 SPORT GLIDE					1340	1987-1999	R
FXSTC SOFTAIL CUSTOM					1340	1989-1999	R
FXSTS 1340 SPRINGER SOFTAIL					1340	1989-1999	R
FLHR/I ROAD KING					1450	1998-1999	R
FLHT/I ELECTRA GLIDE STANDARD					1450	1998-1999	R
FLTR/I ROAD GLIDE					1450	1998-1999	R
FXDWG DYNA WIDE GLIDE					1450	1993-1999	R
FXRS SPORT GLIDE					1450	1984-1986	R

CODICE P/N	Ø Esterno Ø Outer	Ø Interno Ø Inner	Spessore Tickness	Nr fori No. holes	Interasse fori Bolt pattern	Ø Fori Ø Holes	Campanatura Total height
HO02RI	220	122	4	4	140	10,5	-
HONDA							
CR E					125	1989-1997	R
CR R					125	1989-1997	R
AX-1					250	1988	R
CR E					250	1989-1996	R
CR R					250	1989-1996	R
CR E					500	1989-2001	R
CR R					500	1989-2001	R

CODICE P/N	Ø Esterno Ø Outer	Ø Interno Ø Inner	Spessore Tickness	Nr fori No. holes	Interasse fori Bolt pattern	Ø Fori Ø Holes	Campanatura Total height
HO03FI	256	144	4	4	166	10,5	-
HONDA							
XL S					250	1988-1991	R
CB					350	1987	FL/FR
CB S					450	1985-1989	FL/FR
XL V TRANSALP					600	1997-1999	FL/FR
FMX					650	2005-2008	R
FX VIGOR					650	1999-2003	R
NX DOMINATOR					650	1988-2004	FL
NX DOMINATOR					650	1993-2004	R
NX DOMINATOR 34 HP					650	1997-2002	FL
NX DOMINATOR 34 HP					650	1997-2002	R
SLR					650	1996-1999	R
XL V TRANSALP					650	2000-2007	FL/FR
XR L					650	1993-2012	FL
XL V TRANSALP					700	2008-2011	FL/FR
XL V TRANSALP ABS					700	2008-2011	FL/FR

DISKS / DISCHI

I codici che terminano in D indicano sempre il disco Wave®
The codes that finish in D indicate always disc Wave®

FL > disco anteriore sinistro / front left disk
FR > disco anteriore destro / front right disk
R > disco posteriore / rear disk

CODICE P/N	Ø Esterno Ø Outer	Ø Interno Ø Inner	Spessore Tickness	Nr fori No. holes	Interasse fori Bolt pattern	Ø Fori Ø Holes	Campanatura Total height
HO04FI	276	144	4	6	166	10,5	-
HONDA							
XBR S					500	1985-1989	FL
XL V TRANSALP					600	1991-1996	FL
XL V TRANSALP (Rear Drum Model)					600	1987-1990	FL
SLR					650	1996-1999	FL
HO05FI	296	144	4	6	166	10,5	-
CAGIVA							
CANYON					500	1999-2000	FL
CANYON					600	1995-1999	FL
HONDA							
XRV AFRICA TWIN					650	1988-1989	FL
HO05RI	240	105	5	4	125	10,5	-
CAGIVA							
ELEFANT					750	1994-1995	R
ELEFANT					900	1990-1996	R
GRAN CANYON					900	1999-2004	R
NAVIGATOR					1000	2000-2005	R
HONDA							
CB					250	1991-2006	R
FORZA					250	2005-2008	R
SILVER WING					400	2006-2008	R
CB					500	1997-2003	R
CB S					500	1998-2002	R
SILVER WING					600	2001-2007	R
SILVER WING ABS					600	2003-2007	R
XL V TRANSALP					600	1991-1999	R
XL V TRANSALP					650	2000-2007	R
XRV AFRICA TWIN					650	1988-1989	R
XL V TRANSALP					700	2008-2011	R
XL V TRANSALP ABS					700	2008-2011	R
CB F					750	1992-1995	R
CB N					750	1992-1995	R
CB Seven Fifty					750	1992-1995	R
CB F HORNET					900	2002-2006	R
HO05RID	240	105,5	5	4	125	10,5	-
CAGIVA							
ELEFANT					750	1994-1995	R
ELEFANT					900	1990-1996	R
GRAN CANYON					900	1999-2004	R
NAVIGATOR					1000	2000-2005	R
HONDA							
CB					250	1991-2006	R
CB					500	1997-2003	R
CB S					500	1998-2002	R
XL V TRANSALP					600	1991-1999	R
XL V TRANSALP					650	2000-2007	R
XRV AFRICA TWIN					650	1988-1989	R
XL V TRANSALP					700	2008-2011	R
XL V TRANSALP ABS					700	2008-2011	R
CB F					750	1992-1995	R
CB N					750	1992-1995	R
CB Seven Fifty					750	1992-1995	R
CB F HORNET					900	2002-2006	R

CODICE P/N	Ø Esterno Ø Outer	Ø Interno Ø Inner	Spessore Tickness	Nr fori No. holes	Interasse fori Bolt pattern	Ø Fori Ø Holes	Campanatura Total height
HO06RID	190	80,5	4	4	94	6,5	-
HONDA							
CR R					80	1986-2002	R
CR R					85	2003-2007	R
CRF R					150	2007-2013	R
CRF RB					150	2007-2013	R
HO07FI	240	114	4	6	134	10,5	-
HERO							
GLAMOUR (Rear Drum Model)					125	2011-2012	FR
HUNK (Rear Drum Model)					150	2011-2012	FR
HONDA							
CA REBEL (Rear Drum Model)					125	1995-2000	FR
CBF (Rear Drum Model)					125	2009-2012	FR
VT C SHADOW (Rear Drum Model)					125	1999-2008	FL
CBX (Rear Drum Model)					250	1984-1998	FR
CMX C REBEL (Grimeca calip. - Rear Drum)					250	1997-2000	FL
CMX C REBEL (Nissin caliper - Rear Drum)					250	1996	FL
HO09FI	240	118	4	4	134	6,5	-
HONDA							
CRF F					150	2003-2008	FL
CRF F					230	2004-2008	FL
CRF TRAIL					230	2004-2010	FL
SL					230	1997-2001	FL
XL S					250	1988-1991	FL
XR R					250	1988-2004	FL
XR R					400	1995-2005	FL
XL R					600	1983-1987	FL
XR R					600	1991-2000	FL
XR R (Rear Drum Model)					600	1983-1990	FL
XR R					650	2000-2008	FL
HO09FID	240	118,5	4	4	134	6,5	-
HONDA							
CRF F					150	2003-2008	FL
CRF F					230	2004-2008	FL
CRF TRAIL					230	2004-2010	FL
SL					230	1997-2001	FL
XL S					250	1988-1991	FL
XR R					250	1988-2004	FL
XR R					400	1995-2005	FL
XL R					600	1983-1987	FL
XR R					600	1991-2000	FL
XR R (Rear Drum Model)					600	1983-1990	FL
XR R					650	2000-2008	FL
HO09RI	220	105	4	4	125	10,5	-
HONDA							
CBR R					125	2003-2014	R
XLV VARADERO					125	2001-2011	R
SL					230	1997-2001	R
CRF L					250	2013-2014	R
CRM R					250	1991-1993	R
XR R					250	1991-2004	R
XR R					400	1995-2007	R
XR SUPERMOTARD					400	2000-2007	R
XR R					440	2006-2007	R
XR R					500	1983-1986	FL
XR R					600	1991-2000	R

CODICE P/N	Ø Esterno Ø Outer	Ø Interno Ø Inner	Spessore Tickness	Nr fori No. holes	Interasse fori Bolt pattern	Ø Fori Ø Holes	Campanatura Total height
HO09RID	220	105,5	4	4	125	10,5	-
HONDA							
CBR R					125	2003-2014	R
XLV VARADERO					125	2001-2011	R
SL					230	1997-2001	R
CRF L					250	2013-2014	R
CRM R					250	1991-1993	R
XR R					250	1991-2004	R
XR R					400	1995-2007	R
XR SUPERMOTARD					400	2000-2007	R
XR R					440	2006-2007	R
XR R					600	1991-2000	R
HO13FI	240	118	3	4	134	6,5	-
HONDA							
MTX R					80	1987	FL
CR E					125	1992-1994	FL
CR R					125	1992-1994	FL
XLR R					125	1997-2003	FL
CR E					250	1992-1994	FL
CR R					250	1992-1994	FL
CRM R					250	1991-1993	FL
XL R					250	1984-1992	FL
XR R					250	1984-1987	FL
XL R					350	1984-1991	FL
XL X					350	1989	FL
XR R					350	1984-1985	FL
CR E					500	1988	FL
CR E					500	1992-1994	FL
CR R					500	1988	FL
CR R					500	1992-1994	FL
HO13RID	240	106	4	4	125	6,5	-
HONDA							
XR R					650	2000-2008	R
XR SUPERMOTARD					650	2000-2008	R
HO14FI	220	89	3	3	110	10,5	-
HONDA							
SH FIFTY					50	1996	FL
SH SCOOPY					50	1996-1999	FL
SH SCOOPY (Rear Drum Model)					100	1996-2001	FL
YAMAHA							
WHY					50	1999	FL
HO15RI	220	88	4	3	110	10,5	-
HONDA							
CBR F					400	1985-1987	R
CBR F2					400	1985-1987	R
NSR					400	1985-1988	R
VFR R					400	1986-1988	R
CBR F					600	1987-1990	R
HO17FI	160	58	3,2	3	80	10,5	-
CAGIVA							
CITY					50	1992-1994	FL
PASSING					125	1994	FL
HONDA							
HSC 01					50	1993	FL
HSC ZR					50	1992	FL

CODICE P/N	Ø Esterno Ø Outer	Ø Interno Ø Inner	Spessore Tickness	Nr fori No. holes	Interasse fori Bolt pattern	Ø Fori Ø Holes	Campanatura Total height
HO17FI	160	58	3,2	3	80	10,5	-
SR DIO					50	1990	FL
ZX DIO					50	1992	FL
KYMCO							
CX CURIO SUPER					50	1994	FL
FILLY LX					50	2001-2002	FL
HEROISM					50	1995-1999	FL
K 12					50	1995-1999	FL
SNIPER					50	1993	FL
SNIPER DD					50	1994-1996	FL
HEROISM					125	1995-1997	FL
HEROISM					150	1995-1997	FL
SYM							
SR					125	1998	FL
HO17FID	160	59	3,2	3	80	10,5	-
CAGIVA							
CITY					50	1992-1994	FL
PASSING					125	1994	FL
HONDA							
HSC 01					50	1993	FL
HSC ZR					50	1992	FL
SR DIO					50	1990	FL
ZX DIO					50	1992	FL
KYMCO							
CX CURIO SUPER					50	1994	FL
FILLY LX					50	2001-2002	FL
HEROISM					50	1995-1999	FL
K 12					50	1995-1999	FL
SNIPER					50	1993	FL
SNIPER DD					50	1994-1996	FL
HEROISM					125	1995-1997	FL
HEROISM					150	1995-1997	FL
SYM							
SR					125	1998	FL
HO18FI	276	144	4	4	166	10,5	-
HONDA							
XRV AFRICA TWIN					750	1990-2002	FL/FR
HO18FID	276	144,5	4	4	166	10,5	-
HONDA							
XRV AFRICA TWIN					750	1990-2002	FL/FR
HO18RI	256	144	5	4	166	10,5	-
HONDA							
XRV AFRICA TWIN					750	1990-2002	R
XLV VARADERO					1000	1999-2002	R
HO20FI	190	72	5	4	94	10,5	-
HONDA							
CN					250	1987-1998	FL

I codici che terminano in D indicano sempre il disco Wave®
The codes that finish in D indicate always disc Wave®

FL > disco anteriore sinistro / front left disk
FR > disco anteriore destro / front right disk
R > disco posteriore / rear disk

CODICE P/N	Ø Esterno Ø Outer	Ø Interno Ø Inner	Spessore Tickness	Nr fori No. holes	Interasse fori Bolt pattern	Ø Fori Ø Holes	Campanatura Total height
HO20FID	190	72,5	5	4	94	10,5	-
HONDA							
CN					250	1987-1998	FL

CODICE P/N	Ø Esterno Ø Outer	Ø Interno Ø Inner	Spessore Tickness	Nr fori No. holes	Interasse fori Bolt pattern	Ø Fori Ø Holes	Campanatura Total height
HO21FI	256	144	5	6	166	10,5	-
HONDA							
SH i					300	2006-2009	FL
SH i					300	2006-2014	R
SH i ABS					300	2006-2014	R
SH i ABS					300	2006-2009	FL
SH i BLAUER HT Limited Edition					300	2014	R
NSR					400	1985-1988	FL/FR
SILVER WING					400	2006-2008	FL
VFR R					400	1986	FL/FR
VF F					500	1984-1987	R
VF F					500	1984-1987	FL/FR
SILVER WING					600	2001-2006	FL
VFR F					750	1986-1989	R
CBR F					1000	1993-1997	R
X ELEVEN					1100	2000-2003	R

CODICE P/N	Ø Esterno Ø Outer	Ø Interno Ø Inner	Spessore Tickness	Nr fori No. holes	Interasse fori Bolt pattern	Ø Fori Ø Holes	Campanatura Total height
HO21FID	256	145	5	6	166	10,5	-
HONDA							
SH i					300	2006-2009	FL
SH i					300	2006-2014	R
SH i ABS					300	2006-2009	FL
SH i ABS					300	2006-2014	R
SH i BLAUER HT Limited Edition					300	2014	R
NSR					400	1985-1988	FL/FR
SILVER WING					400	2006-2008	FL
VFR R					400	1986	FL/FR
VF F					500	1984-1987	R
VF F					500	1984-1987	FL/FR
SILVER WING					600	2001-2006	FL
VFR F					750	1986-1989	R
CBR F					1000	1993-1997	R
X ELEVEN					1100	2000-2003	R

CODICE P/N	Ø Esterno Ø Outer	Ø Interno Ø Inner	Spessore Tickness	Nr fori No. holes	Interasse fori Bolt pattern	Ø Fori Ø Holes	Campanatura Total height
HO21RID	240	105,5	5	4	125	10,5	-
HONDA							
FORZA					250	2005-2008	R
SILVER WING					400	2006-2008	R
SILVER WING					600	2001-2007	R
SILVER WING ABS					600	2003-2007	R

CODICE P/N	Ø Esterno Ø Outer	Ø Interno Ø Inner	Spessore Tickness	Nr fori No. holes	Interasse fori Bolt pattern	Ø Fori Ø Holes	Campanatura Total height
HO22FI	276	144	5	6	166	10,5	-
HONDA							
CBR R					125	2003-2011	FR
VFR R					400	1987-1988	FL/FR
VFR Z					400	1986-1987	FL/FR
CBR F					600	1987-1994	FL/FR
SILVER WING					600	2007	FL
SILVER WING ABS					600	2003-2007	FL
FX VIGOR					650	1999-2003	FL
CBX F					750	1983-1988	FL/FR
VFR F					750	1986-1987	FL/FR
XLV R					750	1983-1987	FL
VF F					1000	1984-1988	FL/FR

CODICE P/N	Ø Esterno Ø Outer	Ø Interno Ø Inner	Spessore Tickness	Nr fori No. holes	Interasse fori Bolt pattern	Ø Fori Ø Holes	Campanatura Total height
HO22FI	276	144	5	6	166	10,5	-
TRIUMPH							
TIGER					900	1993-1998	FL/FR

CODICE P/N	Ø Esterno Ø Outer	Ø Interno Ø Inner	Spessore Tickness	Nr fori No. holes	Interasse fori Bolt pattern	Ø Fori Ø Holes	Campanatura Total height
HO22FID	276	144	5	6	166	10,5	-
HONDA							
CBR R					125	2003-2011	FR
VFR R					400	1987-1988	FL/FR
VFR Z					400	1986-1987	FL/FR
CBR F					600	1987-1994	FL/FR
SILVER WING					600	2007	FL
SILVER WING ABS					600	2003-2007	FL
FX VIGOR					650	1999-2003	FL
CBX F					750	1983-1988	FL/FR
VFR F					750	1986-1987	FL/FR
XLV R					750	1983-1987	FL
VF F					1000	1984-1988	FL/FR
TRIUMPH							
TIGER					900	1993-1998	FL/FR

CODICE P/N	Ø Esterno Ø Outer	Ø Interno Ø Inner	Spessore Tickness	Nr fori No. holes	Interasse fori Bolt pattern	Ø Fori Ø Holes	Campanatura Total height
HO22RI	220	105	5	4	125	10,5	-
HONDA							
PANTHEON					125	2003-2007	R
PANTHEON					150	2003-2007	R
CB F HORNET					250	1996-2001	R
CBR R					250	2011-2013	R
FORESIGHT					250	2001-2007	R
FORZA					250	2000-2004	R
JAZZ					250	2001-2004	R
VTR					250	1998	R
XELVIS V-25					250	1997	R
CB					400	1989-1991	R
CB N					400	1982-1988	R
CB F HORNET					600	1998-2006	R
CB F HORNET S					600	2000-2004	R
CBR F					600	1991-2007	R
CBR F SPORT					600	2001-2002	R
CBR RR					600	2003-2014	R
CBR RR - ABS					600	2009-2014	R
NX DOMINATOR					650	1988-1992	R
XR L					650	1993-2012	R
CBR RR					900	1992-1999	R
CBR RR					929	2000-2001	R
CBR RR					954	2002-2003	R
CBR RR					1000	2004-2012	R
CBR RR					1000	2014	R
CBR RR					1000	2013	R
CBR RR - ABS					1000	2009-2014	R
VTR F FIRESTORM					1000	1997-2007	R
VTR F SUPER HAWK					1000	1997-2007	R
VTR SP1 RC51					1000	2000-2001	R
VTR SP2 RC51					1000	2002-2004	R
TRIUMPH							
BABY SPEED					600	2001-2002	R
DAYTONA					600	2003-2007	R
SPEED FOUR					600	2003-2006	R
TT					600	2000-2003	R
DAYTONA					675	2006-2012	R
DAYTONA R					675	2011-2012	R
STREET TRIPLE					675	2007-2012	R
STREET TRIPLE R					675	2009-2012	R
SPEED TRIPLE T509					900	1997-1998	R
DAYTONA T595					950	1996-1998	R
DAYTONA T955i					955	1999-2006	R
SPEED TRIPLE T955					955	1999-2004	R
SPEED TRIPLE					1050	2005-2010	R

CODICE P/N	Ø Esterno Ø Outer	Ø Interno Ø Inner	Spessore Tickness	Nr fori No. holes	Interasse fori Bolt pattern	Ø Fori Ø Holes	Campanatura Total height
HO22RID	220	105,5	5	4	125	10,5	-
HONDA							
CB F HORNET					250	1996-2001	R
CBR R					250	2011-2013	R
VTR					250	1998	R
XELVIS V-25					250	1997	R
CB					400	1989-1991	R
CB N					400	1982-1988	R
CB F HORNET					600	1998-2006	R
CB F HORNET S					600	2000-2004	R
CBR F					600	1991-2007	R
CBR F SPORT					600	2001-2002	R
CBR RR					600	2003-2014	R
CBR RR - ABS					600	2009-2014	R
NX DOMINATOR					650	1988-1992	R
XR L					650	1993-2012	R
CBR RR					900	1992-1999	R
CBR RR					929	2000-2001	R
CBR RR					954	2002-2003	R
CBR RR					1000	2004-2012	R
CBR RR					1000	2014	R
CBR RR					1000	2013	R
CBR RR - ABS					1000	2009-2014	R
VTR F FIRESTORM					1000	1997-2007	R
VTR F SUPER HAWK					1000	1997-2007	R
VTR SP1 RC51					1000	2000-2001	R
VTR SP2 RC51					1000	2002-2004	R
TRIUMPH							
BABY SPEED					600	2001-2002	R
DAYTONA					600	2003-2007	R
SPEED FOUR					600	2003-2006	R
TT					600	2000-2003	R
DAYTONA					675	2006-2012	R
DAYTONA R					675	2011-2012	R
STREET TRIPLE					675	2007-2012	R
STREET TRIPLE R					675	2009-2012	R
SPEED TRIPLE T509					900	1997-1998	R
DAYTONA T595					950	1996-1998	R
DAYTONA T955i					955	1999-2006	R
SPEED TRIPLE T955					955	1999-2004	R
SPEED TRIPLE					1050	2005-2010	R

CODICE P/N	Ø Esterno Ø Outer	Ø Interno Ø Inner	Spessore Tickness	Nr fori No. holes	Interasse fori Bolt pattern	Ø Fori Ø Holes	Campanatura Total height
HO23FI	296	144	5	6	166	10,5	-
CAGIVA							
ELEFANT					750	1994-1995	FL
ELEFANT					900	1990-1992	FL
GRAN CANYON					900	1999-2004	FL/FR
NAVIGATOR					1000	2000-2005	FL/FR
HONDA							
NEW LEAD					107	2008	FL
XELVIS V-25					250	1997	FR
CB					500	1993-2003	FR
CBF					500	2004-2008	FR
CBF					600	2004-2007	FL/FR
CBF N					600	2003-2007	FL/FR
CBF S ABS					600	2003-2007	FL/FR
NTV DEAUVILLE					650	1998-2005	FL/FR
NTV DEAUVILLE					680	2006-2012	FL/FR
CB F					750	1992-1995	FL/FR
CB K					750	1981-1986	FL/FR
CB N					750	1992-1995	FL/FR
CB Seven Fifty					750	1992-1995	FL/FR
VFR F					750	1988-1993	FL/FR
VT BLACK WIDOW (Rear Drum Model)					750	2001-2005	FL
VT C2 SHADOW A.C.E.					750	1997-2008	FL
VT S (Rear Drum Model)					750	2011-2013	FL
VT SHADOW (Rear Drum Model)					750	1997-2009	FL
CBR F					1000	1987-1997	FL/FR
ST PAN EUROPEAN					1100	1990	FL/FR
ST PAN EUROPEAN ABS-CBS-TCS					1100	1996-2001	FL/FR

CODICE P/N	Ø Esterno Ø Outer	Ø Interno Ø Inner	Spessore Tickness	Nr fori No. holes	Interasse fori Bolt pattern	Ø Fori Ø Holes	Campanatura Total height
HO23FID	296	144,5	5	6	166	10,5	-
CAGIVA							
ELEFANT					750	1994-1995	FL
ELEFANT					900	1990-1992	FL
GRAN CANYON					900	1999-2004	FL/FR
NAVIGATOR					1000	2000-2005	FL/FR
HONDA							
NEW LEAD					107	2008	FL
XELVIS V-25					250	1997	FR
CB					500	1993-2003	FR
CBF					500	2004-2008	FR
CBF					600	2004-2007	FL/FR
CBF N					600	2003-2007	FL/FR
CBF S ABS					600	2003-2007	FL/FR
NTV DEAUVILLE					650	1998-2005	FL/FR
NTV DEAUVILLE					680	2006-2012	FL/FR
CB F					750	1992-1995	FL/FR
CB K					750	1981-1986	FL/FR
CB N					750	1992-1995	FL/FR
CB Seven Fifty					750	1992-1995	FL/FR
VFR F					750	1988-1993	FL/FR
VT BLACK WIDOW (Rear Drum Model)					750	2001-2005	FL
VT C2 SHADOW A.C.E.					750	1997-2008	FL/FR
VT S (Rear Drum Model)					750	2011-2013	FL
VT SHADOW (Rear Drum Model)					750	1997-2009	FL
CBR F					1000	1987-1997	FL/FR
ST PAN EUROPEAN					1100	1990	FL/FR
ST PAN EUROPEAN ABS-CBS-TCS					1100	1996-2001	FL/FR

CODICE P/N	Ø Esterno Ø Outer	Ø Interno Ø Inner	Spessore Tickness	Nr fori No. holes	Interasse fori Bolt pattern	Ø Fori Ø Holes	Campanatura Total height
HO23RI	256	94	5	4	110	8,5	-
HONDA							
VFR F					750	1990-1997	R
CROSSRUNNER					800	2011-2014	R
VFR V-TEC					800	1998-2010	R

CODICE P/N	Ø Esterno Ø Outer	Ø Interno Ø Inner	Spessore Tickness	Nr fori No. holes	Interasse fori Bolt pattern	Ø Fori Ø Holes	Campanatura Total height
HO23RID	256	94	5	4	110	8,5	-
HONDA							
VFR F					750	1990-1997	R
CROSSRUNNER					800	2011-2014	R
VFR V-TEC					800	1998-2010	R

CODICE P/N	Ø Esterno Ø Outer	Ø Interno Ø Inner	Spessore Tickness	Nr fori No. holes	Interasse fori Bolt pattern	Ø Fori Ø Holes	Campanatura Total height
HO24FID	220	88	3	4	106	6,5	-
HONDA							
CR R					80	1996-2002	FL
CR R					85	2003-2007	FL
CRF R					150	2007-2013	FL
CRF RB					150	2007-2013	FL

CODICE P/N	Ø Esterno Ø Outer	Ø Interno Ø Inner	Spessore Tickness	Nr fori No. holes	Interasse fori Bolt pattern	Ø Fori Ø Holes	Campanatura Total height
HO25FID	240	102	3	6	117	6,5	-
HONDA							
CR E					125	1995-2008	FL
CR R					125	1995-2008	FL
CR E					250	1995-2008	FL
CR R					250	1995-2008	FL
CRF R					250	2004-2014	FL
CRF X					250	2004-2012	FL
CRF R					450	2002-2014	FL
CRF X					450	2004-2012	FL
CR E					500	1995-2001	FL
CR R					500	1995-2001	FL

I codici che terminano in D indicano sempre il disco Wave®
The codes that finish in D indicate always disc Wave®

FL > disco anteriore sinistro / front left disk
FR > disco anteriore destro / front right disk
R > disco posteriore / rear disk

CODICE P/N	Ø Esterno Ø Outer	Ø Interno Ø Inner	Spessore Tickness	Nr fori No. holes	Interasse fori Bolt pattern	Ø Fori Ø Holes	Campanatura Total height
H025FID	240	102	3	6	117	6,5	-
HONDA-HM							
CRF R					150	2007-2009	FL
CRF ENDURO					230	2004-2010	FL
CRE F					250	2004-2009	FL
CRE F 250 R					250	2004-2009	FL
CRE F 250 X					250	2008-2011	FL
CRE X					250	2004-2009	FL
CRF F					250	2004-2009	FL
CRF R					250	2008-2013	FL
CRE F 300 X					300	2008-2009	FL
CRE F 450 R ENDURO					450	2004-2008	FL
CRE F 450 X					450	2004-2009	FL
CRF R					450	2004-2014	FL
CRE F 490 X					490	2007	FL
CRE F 500 X					500	2008-2009	FL
CRM F 500 X					500	2011	FL

CODICE P/N	Ø Esterno Ø Outer	Ø Interno Ø Inner	Spessore Tickness	Nr fori No. holes	Interasse fori Bolt pattern	Ø Fori Ø Holes	Campanatura Total height
H025RID	240	122,5	4,5	4	140	10,5	-
HONDA							
CR E					125	1998-2001	R
CR R					125	1998-2001	R
CR E					250	1997-2001	R
CR R					250	1997-2001	R
HONDA-HM							
CR E SUPERMOTARD					125	2000-2001	R
CR E SUPERMOTARD					250	2000-2001	R

CODICE P/N	Ø Esterno Ø Outer	Ø Interno Ø Inner	Spessore Tickness	Nr fori No. holes	Interasse fori Bolt pattern	Ø Fori Ø Holes	Campanatura Total height
H026FL	318	144	5	6	166	10,5	-
HONDA							
VF V TWIN MAGNA					250	1997	FL
NT HAWK GT					650	1988-1990	FL
NTV REVERE					650	1988-1998	FL
VF C MAGNA					750	1994-2003	FL/FR
VF SHADOW					750	1994-2007	FL
ST PAN EUROPEAN					1100	1996-2001	FL/FR
VT SHADOW					1100	1992-1995	FR
VT SHADOW ACE-AERO-C2-C3					1100	1995-1998	FR

CODICE P/N	Ø Esterno Ø Outer	Ø Interno Ø Inner	Spessore Tickness	Nr fori No. holes	Interasse fori Bolt pattern	Ø Fori Ø Holes	Campanatura Total height
H026FLD	318	144	5	6	166	10,5	-
HONDA							
VF V TWIN MAGNA					250	1997	FL
NT HAWK GT					650	1988-1990	FL
NTV REVERE					650	1988-1998	FL
VF C MAGNA					750	1994-2003	FL/FR
VF SHADOW					750	1994-2007	FL
ST PAN EUROPEAN					1100	1996-2001	FL/FR
VT SHADOW					1100	1992-1995	FR
VT SHADOW ACE-AERO-C2-C3					1100	1995-1998	FR

CODICE P/N	Ø Esterno Ø Outer	Ø Interno Ø Inner	Spessore Tickness	Nr fori No. holes	Interasse fori Bolt pattern	Ø Fori Ø Holes	Campanatura Total height
H031RI	276	144	5	6	166	10,5	-
HONDA							
NTV DEAUVILLE					650	1998-2005	R
NTV DEAUVILLE					680	2006-2012	R
CBX F					750	1983-1988	R
PACIFIC COAST					800	1989-1992	FL/FR
CB F Big one					1000	1993-1995	R
CBR F					1000	1987-1992	R
VT SHADOW ACE-AERO-C2-C3					1100	1995-1998	R
CB					1284	1998-2002	R
CB X4					1284	1997	R

CODICE P/N	Ø Esterno Ø Outer	Ø Interno Ø Inner	Spessore Tickness	Nr fori No. holes	Interasse fori Bolt pattern	Ø Fori Ø Holes	Campanatura Total height
H032FI	190	58	3,2	3	80	10,5	-
HONDA							
BALI SJ (Rear Drum Model)					50	1993-1999	FL
SKY (Rear Drum Model)					50	1997-2003	FL
YUPI					50	1990	FL
BALI SJ (Rear Drum Model)					100	1996-1999	FL
CH SPACY					125	1998	FL/FR
MBK							
BOOSTER NG					50	1995-1998	FL
NITRO					50	1997-2010	FL
NITRO					50	1997-2010	R
STUNT					50	2000-2006	FL
STUNT NAKED					50	2005-2010	FL
NITRO					100	1999-2003	FL
PGO							
PMS					50	1999	FL
T REX					50	1999	FL
PMS					110	1999	FL
T REX					110	1999	FL
YAMAHA							
AEROX					50	1997-2014	FL
AEROX					50	1997-2014	R
JOG R (Rear Drum Model)					50	2002-2011	FL
NEOS (Rear Drum Model)					50	2007-2014	FL
NEOS 4T (Rear Drum Model)					50	2009-2014	FL
SLIDER					50	1999	FL
SLIDER					50	1999	R
AEROX					100	2000-2002	FL
AEROX					100	2000-2002	R

CODICE P/N	Ø Esterno Ø Outer	Ø Interno Ø Inner	Spessore Tickness	Nr fori No. holes	Interasse fori Bolt pattern	Ø Fori Ø Holes	Campanatura Total height
H032FID	190	58,5	3,8	3	80	10,5	-
HONDA							
BALI SJ (Rear Drum Model)					50	1993-1999	FL
SKY (Rear Drum Model)					50	1997-2003	FL
YUPI					50	1990	FL
BALI SJ (Rear Drum Model)					100	1996-1999	FL
CH SPACY					125	1998	FL/FR
MBK							
BOOSTER NG					50	1995-1998	FL
NITRO					50	1997-2010	FL
NITRO					50	1997-2010	R
STUNT					50	2000-2006	FL
STUNT NAKED					50	2005-2010	FL
NITRO					100	1999-2003	FL
PGO							
PMS					50	1999	FL
T REX					50	1999	FL
PMS					110	1999	FL
T REX					110	1999	FL
YAMAHA							
AEROX					50	1997-2014	FL
AEROX					50	1997-2014	R
JOG R (Rear Drum Model)					50	2002-2011	FL
NEOS (Rear Drum Model)					50	2007-2014	FL
NEOS 4T (Rear Drum Model)					50	2009-2014	FL
SLIDER					50	1999	FL
SLIDER					50	1999	R
AEROX					100	2000-2002	FL
AEROX					100	2000-2002	R

CODICE P/N	Ø Esterno Ø Outer	Ø Interno Ø Inner	Spessore Tickness	Nr fori No. holes	Interasse fori Bolt pattern	Ø Fori Ø Holes	Campanatura Total height
H033FI	296	184,5	6	6	206	10,5	-
HONDA							
GL GOLD WING					1100	1982-1983	FL/FR
GL GOLD WING					1100	1982-1983	R
GL GOLD WING					1500	1988-2000	FL/FR
GLX SE					1500	1990-2000	FL/FR

CODICE P/N	Ø Esterno Ø Outer	Ø Interno Ø Inner	Spessore Tickness	Nr fori No. holes	Interasse fori Bolt pattern	Ø Fori Ø Holes	Campanatura Total height
H033RI	316	184,5	6	6	206	10,5	-
HONDA							
ST PAN EUROPEAN					1100	1990-1996	R
ST PAN EUROPEAN ABS-CBS-TCS					1100	1996	R
GL F6C VALKYRIE					1500	1997	R
GLX SE					1500	1990-1998	R

CODICE P/N	Ø Esterno Ø Outer	Ø Interno Ø Inner	Spessore Tickness	Nr fori No. holes	Interasse fori Bolt pattern	Ø Fori Ø Holes	Campanatura Total height
H034FI	220	104	4	3	124	10,5	-
HONDA							
SZX X 8RS					50	1998-2004	FL
SZX X 8RX					50	1998-2004	FL

CODICE P/N	Ø Esterno Ø Outer	Ø Interno Ø Inner	Spessore Tickness	Nr fori No. holes	Interasse fori Bolt pattern	Ø Fori Ø Holes	Campanatura Total height
H034RI	190	72	3,5	4	94	10,5	-
HONDA							
SZX X 8RS					50	1998-2004	R
SZX X 8RX					50	1998-2004	R

CODICE P/N	Ø Esterno Ø Outer	Ø Interno Ø Inner	Spessore Tickness	Nr fori No. holes	Interasse fori Bolt pattern	Ø Fori Ø Holes	Campanatura Total height
H040RI	220	58	4	3	80	8,5	-
HONDA							
TRX X					250	1987-1992	R
TRX EX					300	1993-2008	R
TRX EX SPORTRAX					300	2001	R

CODICE P/N	Ø Esterno Ø Outer	Ø Interno Ø Inner	Spessore Tickness	Nr fori No. holes	Interasse fori Bolt pattern	Ø Fori Ø Holes	Campanatura Total height
H040RID	220	59	4	3	80	8,5	-
HONDA							
TRX X					250	1987-1992	R
TRX EX					300	1993-2008	R
TRX EX SPORTRAX					300	2001	R

CODICE P/N	Ø Esterno Ø Outer	Ø Interno Ø Inner	Spessore Tickness	Nr fori No. holes	Interasse fori Bolt pattern	Ø Fori Ø Holes	Campanatura Total height
H041FID	174	53,5	3	3	72	10,5	-
HONDA							
TRX EX SPORTRAX					250	2001-2007	FL/FR
TRX R					250	1988-1989	FL/FR
TRX X					250	1987-1992	FL/FR
TRX EX					300	1993-2008	FL/FR
TRX EX					400	1999-2008	FL/FR
TRX EX FOURTRAX					400	1999-2007	FL/FR
TRX EX SPORTRAX					400	2001	FL/FR
TRX R					450	2004-2009	FL/FR

CODICE P/N	Ø Esterno Ø Outer	Ø Interno Ø Inner	Spessore Tickness	Nr fori No. holes	Interasse fori Bolt pattern	Ø Fori Ø Holes	Campanatura Total height
H047RID	220	105,5	4	4	125	10,5	-
HONDA							
TRX EX					400	1999-2008	R
KAWASAKI							
KFX					400	2002-2006	R
SUZUKI							
LT Z QUADSPORT					400	2003-2009	R

CODICE P/N	Ø Esterno Ø Outer	Ø Interno Ø Inner	Spessore Tickness	Nr fori No. holes	Interasse fori Bolt pattern	Ø Fori Ø Holes	Campanatura Total height
H049FI	220	105	3,5	4	125	10,5	-
HONDA							
@ NES (Rear Drum Model)					125	2001-2006	FL
DYLAN					125	2002	FL
PSi					125	2006	FL
SH (Rear Drum Model)					125	2001-2004	FL
SH i (Rear Drum Model)					125	2005-2008	FL
@ NES (Rear Drum Model)					150	2001-2006	FL
DYLAN					150	2002	FL
PSi					150	2006	FL
SH (Rear Drum Model)					150	2001-2004	FL
SH i (Rear Drum Model)					150	2005-2008	FL

CODICE P/N	Ø Esterno Ø Outer	Ø Interno Ø Inner	Spessore Tickness	Nr fori No. holes	Interasse fori Bolt pattern	Ø Fori Ø Holes	Campanatura Total height
H049FID	220	105,5	4	4	125	10,5	-
HONDA							
@ NES (Rear Drum Model)					125	2001-2006	FL
DYLAN					125	2002	FL
PSi					125	2006	FL
SH (Rear Drum Model)					125	2001-2004	FL
SH i (Rear Drum Model)					125	2005-2008	FL
@ NES (Rear Drum Model)					150	2001-2006	FL
DYLAN					150	2002	FL
PSi					150	2006	FL
SH (Rear Drum Model)					150	2001-2004	FL
SH i (Rear Drum Model)					150	2005-2008	FL

CODICE P/N	Ø Esterno Ø Outer	Ø Interno Ø Inner	Spessore Tickness	Nr fori No. holes	Interasse fori Bolt pattern	Ø Fori Ø Holes	Campanatura Total height
H050FID	240	105,5	4	4	125	10,5	-
HONDA							
PANTHEON					125	1998-2007	FL
SH i					125	2009-2014	FL
SH SPORTY					125	2011	FR
SILVER WING					125	2007-2011	FL
SILVER WING ABS					125	2007-2011	FL
PANTHEON					150	1998-2007	FL
SH i					150	2009-2014	FL
SH SPORTY					150	2011	FR
FORESIGHT					250	2001-2007	FL
FORZA					250	2000-2007	FL
JAZZ					250	2001-2004	FL
PEUGEOT							
SV					250	2002-2007	FL

CODICE P/N	Ø Esterno Ø Outer	Ø Interno Ø Inner	Spessore Tickness	Nr fori No. holes	Interasse fori Bolt pattern	Ø Fori Ø Holes	Campanatura Total height
H050RID	220	105,5	5	4	125	10,5	-
HONDA							
PANTHEON					125	2003-2007	R
PANTHEON					150	2003-2007	R
FORESIGHT					250	2001-2007	R
FORZA					250	2000-2004	R
JAZZ					250	2001-2004	R

CODICE P/N	Ø Esterno Ø Outer	Ø Interno Ø Inner	Spessore Tickness	Nr fori No. holes	Interasse fori Bolt pattern	Ø Fori Ø Holes	Campanatura Total height
H051RID	256	145	5	6	166	10,5	-
HONDA							
XLV VARADERO					1000	2003-2011	R
XLV VARADERO ABS					1000	2004-2011	R
CBR XX					1100	1997-2007	R
X ELEVEN					1100	2000-2003	R
CB					1284	2003-2008	R

DISKS / DISCHI

I codici che terminano in D indicano sempre il disco Wave®
The codes that finish in D indicate always disc Wave®

FL > disco anteriore sinistro / front left disk
FR > disco anteriore destro / front right disk
R > disco posteriore / rear disk

CODICE P/N	Ø Esterno Ø Outer	Ø Interno Ø Inner	Spessore Tickness	Nr fori No. holes	Interasse fori Bolt pattern	Ø Fori Ø Holes	Campanatura Total height
HO53RID	190	72,5	4	3	90	10,5	-
HONDA							
TRX R					450	2004-2009	R

CODICE P/N	Ø Esterno Ø Outer	Ø Interno Ø Inner	Spessore Tickness	Nr fori No. holes	Interasse fori Bolt pattern	Ø Fori Ø Holes	Campanatura Total height
HO55RID	240	116,5	5	4	135	10,5	-
HONDA							
CBF					500	2004-2008	R
CB F HORNET					600	2007-2013	R
CB F HORNET ABS					600	2007-2013	R
CBF					600	2004-2007	R
CBF N					600	2003-2007	R
CBF S ABS					600	2003-2007	R
CBR F					600	2011-2013	R
CBR F ABS					600	2011-2013	R
CBF					1000	2006-2011	R
CBF ABS					1000	2006-2012	R
CBF ST ABS					1000	2006-2012	R

CODICE P/N	Ø Esterno Ø Outer	Ø Interno Ø Inner	Spessore Tickness	Nr fori No. holes	Interasse fori Bolt pattern	Ø Fori Ø Holes	Campanatura Total height
HO60RID	240	121,5	4	4	140	6,5	-
HONDA							
CR E					125	2002-2008	R
CR R					125	2002-2008	R
CR E					250	2002-2008	R
CR R					250	2002-2008	R
CRF R					250	2004-2014	R
CRF X					250	2004-2012	R
CRF R					450	2002-2014	R
CRF X					450	2004-2012	R
HONDA-HM							
CR E SUPERMOTARD					125	2002-2008	R
CRF R					150	2007-2009	R
CRF ENDURO					230	2004-2010	R
CRF SUPERMOTARD					230	2004-2010	R
CR E SUPERMOTARD					250	2002-2009	R
CRE F					250	2004-2009	R
CRE F 250 R					250	2004-2009	R
CRE F 250 X					250	2008-2011	R
CRE X					250	2004-2009	R
CRF F					250	2004-2009	R
CRF R					250	2008-2013	R
CRF R SUPERMOTARD					250	2004-2008	R
CRF X SUPERMOTARD					250	2004-2008	R
CRE F 300 X					300	2008-2009	R
CRE F 450 R ENDURO					450	2004-2008	R
CRE F 450 X					450	2004-2009	R
CRF R					450	2004-2014	R
CRF SUPERMOTARD					450	2002-2003	R
CRF X SUPERMOTARD					450	2004-2009	R
CRE F 490 X					490	2007	R
CRE F 500 X					500	2008-2009	R
CRM F 500 X					500	2011	R

CODICE P/N	Ø Esterno Ø Outer	Ø Interno Ø Inner	Spessore Tickness	Nr fori No. holes	Interasse fori Bolt pattern	Ø Fori Ø Holes	Campanatura Total height
HU09RID	220	112,5	4,1	4	130	9,5	-
HUSQVARNA							
CR					125	2000-2004	R
SM S					125	2000-2012	R
SMS4					125	2010-2011	R
TE					125	2010-2013	R
WR					125	2000-2005	R
WR E					125	2000-2012	R
TE					250	2004-2006	R
SMR					450	2003-2009	R
TE					450	2002-2005	R
SMR					510	2005	R

CODICE P/N	Ø Esterno Ø Outer	Ø Interno Ø Inner	Spessore Tickness	Nr fori No. holes	Interasse fori Bolt pattern	Ø Fori Ø Holes	Campanatura Total height
HU09RID	220	112,5	4,1	4	130	9,5	-
TC					510	2002-2004	R
TE					510	2002-2005	R
TE Centennial					510	2004	R
TC					610	2000-2004	R
TE					610	2000-2004	R
TE E					610	2005-2007	R
TE					630	2010-2012	R

CODICE P/N	Ø Esterno Ø Outer	Ø Interno Ø Inner	Spessore Tickness	Nr fori No. holes	Interasse fori Bolt pattern	Ø Fori Ø Holes	Campanatura Total height
IT03FI	248	110	4	6	129	8,5	-
ITALJET							
JUPITER					250	2001-2006	FL/FR

CODICE P/N	Ø Esterno Ø Outer	Ø Interno Ø Inner	Spessore Tickness	Nr fori No. holes	Interasse fori Bolt pattern	Ø Fori Ø Holes	Campanatura Total height
KM01FI	180	58,5	3,8	3	80	10,5	-
KYMCO							
AGILITY R12 (Rear Drum Model)					50	2005-2014	FL
DINK					50	1998-2001	FL
MXER					50	2003	FL/FR
TOP BOY					50	1998-2006	FL
VITALITY					50	2004	FL
VITALITY 4T					50	2004-2009	FL
AGILITY CARRY (Rear Drum Model)					125	2011-2012	FL
AGILITY R12 (Rear Drum Model)					125	2005-2010	FL
DINK					125	1996-2004	FR
DINK					125	1996-2004	R
DINK					150	1997-2004	FR
DINK					150	1997-2004	R
PEUGEOT							
X RACE					50	2002-2005	R

CODICE P/N	Ø Esterno Ø Outer	Ø Interno Ø Inner	Spessore Tickness	Nr fori No. holes	Interasse fori Bolt pattern	Ø Fori Ø Holes	Campanatura Total height
KM01FID	180	58,5	3,8	3	80	10,5	-
KYMCO							
AGILITY R12 (Rear Drum Model)					50	2005-2014	FL
DINK					50	1998-2001	FL
MXER					50	2003	FL/FR
TOP BOY					50	1998-2006	FL
VITALITY					50	2004	FL
VITALITY 4T					50	2004-2009	FL
AGILITY CARRY (Rear Drum Model)					125	2011-2012	FL
AGILITY R12 (Rear Drum Model)					125	2005-2010	FL
DINK					125	1996-2004	FR
DINK					125	1996-2004	R
DINK					150	1997-2004	FR
DINK					150	1997-2004	R
PEUGEOT							
X RACE					50	2002-2005	R

CODICE P/N	Ø Esterno Ø Outer	Ø Interno Ø Inner	Spessore Tickness	Nr fori No. holes	Interasse fori Bolt pattern	Ø Fori Ø Holes	Campanatura Total height
KM04FI	220	58,5	4	5	80	10,5	-
KYMCO							
BET&WIN					50	2001-2006	FR
DINK					50	2003-2010	FR
DINK SPORTS					50	2002-2006	FR
VITALITY 2T					50	2004-2009	FL
DINK CLASSIC					125	2002-2003	FR
GRAND DINK					125	2001-2007	FR
MOVIE XL					125	2001-2009	FR
DINK CLASSIC					150	2002-2003	FR
MOVIE XL					150	2001-2009	FR
DINK CLASSIC					200	2004-2005	FR
BET&WIN					250	2000-2006	FR
GRAND DINK					250	2001-2006	FR

CODICE P/N	Ø Esterno Ø Outer	Ø Interno Ø Inner	Spessore Tickness	Nr fori No. holes	Interasse fori Bolt pattern	Ø Fori Ø Holes	Campanatura Total height
KM04FID	220	58,5	4	5	80	10,5	-
KYMCO							
BET&WIN					50	2001-2006	FR
DINK					50	2003-2010	FR
DINK SPORTS					50	2002-2006	FR
VITALITY 2T					50	2004-2009	FL
DINK CLASSIC					125	2002-2003	FR
GRAND DINK					125	2001-2007	FR
MOVIE XL					125	2001-2009	FR
DINK CLASSIC					150	2002-2003	FR
MOVIE XL					150	2001-2009	FR
DINK CLASSIC					200	2004-2005	FR
BET&WIN					250	2000-2006	FR
GRAND DINK					250	2001-2006	FR

CODICE P/N	Ø Esterno Ø Outer	Ø Interno Ø Inner	Spessore Tickness	Nr fori No. holes	Interasse fori Bolt pattern	Ø Fori Ø Holes	Campanatura Total height
KM04RI	200	58,5	4	5	80	10,5	-
KYMCO							
GRAND DINK					125	2001-2007	R
GRAND DINK					150	2001-2007	R
BET&WIN					250	2000-2006	R
GRAND DINK					250	2001-2006	R
YUP					250	2003-2006	R

CODICE P/N	Ø Esterno Ø Outer	Ø Interno Ø Inner	Spessore Tickness	Nr fori No. holes	Interasse fori Bolt pattern	Ø Fori Ø Holes	Campanatura Total height
KM04RID	200	58,5	4	5	80	10,5	-
KYMCO							
GRAND DINK					125	2001-2007	R
GRAND DINK					150	2001-2007	R
BET&WIN					250	2000-2006	R
GRAND DINK					250	2001-2006	R
YUP					250	2003-2006	R

CODICE P/N	Ø Esterno Ø Outer	Ø Interno Ø Inner	Spessore Tickness	Nr fori No. holes	Interasse fori Bolt pattern	Ø Fori Ø Holes	Campanatura Total height
KM05FI	260	105,5	5	5	130	10,5	-
KYMCO							
XCITING					250	2004-2008	FL/FR
XCITING R					300	2009-2011	FL/FR
XCITING Ri					300	2008-2009	FL/FR
XCITING					500	2004-2009	FL/FR
XCITING R					500	2007-2011	FL/FR

CODICE P/N	Ø Esterno Ø Outer	Ø Interno Ø Inner	Spessore Tickness	Nr fori No. holes	Interasse fori Bolt pattern	Ø Fori Ø Holes	Campanatura Total height
KM05RI	240	125,5	5	5	150	10,5	-
KYMCO							
XCITING					250	2004-2008	R
XCITING R					300	2009-2011	R
XCITING Ri					300	2008-2009	R
XCITING					500	2004-2009	R
XCITING R					500	2007-2011	R

CODICE P/N	Ø Esterno Ø Outer	Ø Interno Ø Inner	Spessore Tickness	Nr fori No. holes	Interasse fori Bolt pattern	Ø Fori Ø Holes	Campanatura Total height
KM05RID	240	125,5	5	5	150	10,5	-
KYMCO							
XCITING					250	2004-2008	R
XCITING R					300	2009-2011	R
XCITING Ri					300	2008-2009	R
XCITING					500	2004-2009	R
XCITING R					500	2007-2011	R

CODICE P/N	Ø Esterno Ø Outer	Ø Interno Ø Inner	Spessore Tickness	Nr fori No. holes	Interasse fori Bolt pattern	Ø Fori Ø Holes	Campanatura Total height
KT02FID	260	127	3,2	6	143	6,5	-
HUSABERG							
TE					125	2012-2014	FL
FE					250	2013-2014	FL
TE					250	2011-2014	FL
TE					300	2011-2014	FL
FE					350	2013-2014	FL
FE					390	2010-2012	FL
FE					400	2000-2003	FL
FE E					400	2001-2003	FL
FS C					400	2001-2003	FL
FS E					400	2001-2003	FL
FE					450	2009-2014	FL
FX					450	2010	FL
FC					470	2001-2002	FL
FC					501	1999-2003	FL
FE E					501	1999-2004	FL
FE S					501	1999-2004	FL
FE					510	2013-2014	FL
FC					550	2001-2005	FL
FE E					550	2004-2008	FL
FE					570	2010-2012	FL
FC					600	1999-2003	FL
FE E					600	1999-2002	FL
FE E					650	2001-2008	FL
FX E					650	2001-2005	FL
HUSQVARNA							
TC					125	2014-2015	FL
TE					125	2014	FL
FC					250	2014	FL
FE					250	2014-2015	FL
TC					250	2014	FL
TE					250	2014	FL
TE					300	2014-2015	FL
FC					350	2014-2015	FL
FE					350	2014	FL
FC					450	2014-2015	FL
FE					450	2014-2015	FL
FE					510	2014	FL
KTM							
EXC					125	1998-2015	FL
EXC SIX DAYS					125	2009-2015	FL
GS					125	1993-1997	FL
MX					125	1992	FL
SX					125	1993-2015	FL
SXS					125	2000-2010	FL
SX					144	2007-2010	FL
SX					150	2008-2015	FL
EXC					200	1998-2015	FL
MXC					200	1998-2003	FL
SX					200	2003-2009	FL
XC W					200	2006-2009	FL
EXC					250	1998-2014	FL
EXC E					250	2015	FL
EXC F					250	2003-2015	FL
EXC F SIX DAYS					250	2009-2015	FL
EXC G					250	2004-2009	FL
EXC SIX DAYS					250	2009-2015	FL
GS					250	1993-1997	FL
MX					250	1992	FL
MXC					250	1998-2003	FL
SX					250	1993-2015	FL
SX F					250	2003-2015	FL
SXS					250	2003-2010	FL
SXS F					250	2006-2009	FL
XC F					250	2007-2012	FL
XC W					250	2006-2012	FL
EXC					300	1997-2014	FL
EXC E					300	2015	FL
EXC SIX DAYS					300	2009-2015	FL
GS					300	1991-1996	FL

DISKS / DISCHI

I codici che terminano in D indicano sempre il disco Wave®
The codes that finish in D indicate always disc Wave®

FL > disco anteriore sinistro / front left disk
FR > disco anteriore destro / front right disk
R > disco posteriore / rear disk

CODICE P/N	Ø Esterno Ø Outer	Ø Interno Ø Inner	Spessore Tickness	Nr fori No. holes	Interasse fori Bolt pattern	Ø Fori Ø Holes	Campanatura Total height
KT02FID	260	127	3,2	6	143	6,5	-
MX					300	1991-1992	FL
MXC					300	1998-2005	FL
SX					300	1993	FL
SX					300	1997-2003	FL
XC					300	2006-2012	FL
XC W					300	2006-2012	FL
EXC F					350	2010-2015	FL
EXC F SIX DAYS					350	2011-2015	FL
GS					350	1993	FL
SX F					350	2011-2015	FL
EXC					380	1998-2002	FL
MXC					380	1998-2001	FL
SX					380	1998-2002	FL
EGS					400	1996-1999	FL
EXC					400	1994-2011	FL
EXC G					400	2004-2006	FL
SX					400	2000-2002	FL
XC W					400	2007-2009	FL
EXC					450	2003-2015	FL
EXC R					450	2008-2009	FL
EXC SIX DAYS					450	2009-2015	FL
MXC					450	2003-2006	FL
SX F					450	2003-2015	FL
SXS					450	2003-2010	FL
SXS F					450	2003-2010	FL
XC					450	2007-2009	FL
XC F					450	2007-2009	FL
XC G					450	2006	FL
XC W					450	2007-2009	FL
EXC					500	2011-2015	FL
EXC SIX DAYS					500	2011-2015	FL
MX					500	1992	FL
SX					500	1993-1995	FL
SX F					505	2007-2009	FL
XC F					505	2007-2009	FL
EXC					520	2000-2002	FL
MXC					520	2001-2002	FL
SX					520	2000-2002	FL
EXC					525	2003-2008	FL
MXC					525	2003-2005	FL
SX					525	2003-2006	FL
XC					525	2006-2008	FL
XC G					525	2006-2008	FL
XC W					525	2006-2008	FL
EXC					530	2010-2011	FL
EXC R					530	2008-2009	FL
EXC SIX DAYS					530	2009	FL
SXC					540	1999-2000	FL
SXS					540	2001-2006	FL
GS					600	1993	FL
LC4 ENDURO					600	1991-1992	FL
MX					600	1992	FL
LC4 SC SUPERCOMP					620	1998-2004	FL
LC4 SUPERMOTO					620	1999-2001	FL
LC4 SC SUPERCOMP					625	2002	FL
SXC					625	2003-2008	FL
KT03FL	300	127	4	6	143	6,5	-
KTM							
LC4 ADVENTURE					620	1997-1998	FL
LC4 ADVENTURE					640	1998-2000	FL
LC4 ADVENTURE					640	2004-2007	FL/FR
LC4 ENDURO					640	1999-2007	FL
LC8 ADVENTURE					950	2002-2006	FL/FR
LC8 ADVENTURE S					950	2004-2006	FL/FR
SUPER ENDURO R					950	2006-2008	FL
LC8 ADVENTURE R					990	2010-2012	FL/FR
LC8 ADVENTURE S					990	2006-2008	FL/FR

CODICE P/N	Ø Esterno Ø Outer	Ø Interno Ø Inner	Spessore Tickness	Nr fori No. holes	Interasse fori Bolt pattern	Ø Fori Ø Holes	Campanatura Total height
KT03FLD	300	127	4	6	143	6,5	-
KTM							
LC4 ADVENTURE					620	1997-1998	FL
LC4 ADVENTURE					640	1998-2000	FL
LC4 ADVENTURE					640	2004-2007	FL
LC4 ENDURO					640	1999-2007	FL
LC8 ADVENTURE					950	2002-2006	FL
LC8 ADVENTURE S					950	2004-2006	FL
SUPER ENDURO R					950	2006-2008	FL
LC8 ADVENTURE R					990	2010-2012	FL
LC8 ADVENTURE S					990	2006-2008	FL
KT06FID	200	89	3	3	104	6,5	-
HUSQVARNA							
CR					65	2011-2012	FR
KTM							
SX					65	1998-2014	FL
XC					65	2008	FL
MX					80	2000-2002	FL
KT06RID	160	45,5	3	4	60	6,5	-
KTM							
SX					65	1998-2014	R
XC					65	2008	R
MX					80	2000-2002	R
KT07FID	220	95	3	4	110	6,2	-
KTM							
SX					85	2003-2014	FL
XC					85	2007-2009	FL
SX					105	2004-2008	FL
XC					105	2008	FL
KT07RID	200	110	3,5	4	125	6,2	-
KTM							
SX					85	2003-2010	R
XC					85	2007-2009	R
SX					105	2004-2008	R
XC					105	2008	R
KT08FLD	300	127	4	6	143	6,5	-
KTM							
LC4 ADVENTURE					640	2004-2007	FR
LC8 ADVENTURE					950	2002-2006	FR
LC8 ADVENTURE S					950	2004-2006	FR
LC8 ADVENTURE R					990	2010-2012	FR
LC8 ADVENTURE S					990	2006-2008	FR
KT09RID	240	107,5	5	5	130	8,5	-
KTM							
DUKE					690	2008-2014	R
DUKE R					690	2010-2011	R
SUPERMOTO					950	2005-2007	R
SUPERMOTO R					950	2006-2008	R

CODICE P/N	Ø Esterno Ø Outer	Ø Interno Ø Inner	Spessore Tickness	Nr fori No. holes	Interasse fori Bolt pattern	Ø Fori Ø Holes	Campanatura Total height
KT09RID	240	107,5	5	5	130	8,5	-
SM T					990	2009-2013	R
SUPER DUKE					990	2005-2011	R
SUPER DUKE R					990	2007-2013	R
SUPERMOTO					990	2007-2012	R
SUPERMOTO R					990	2010-2012	R
KT10RID	240	111	4	6	125	6,5	-
BETA							
RR 2T ENDURO					250	2013-2014	R
RR 2T RACING					250	2013-2014	R
RR 2T ENDURO					300	2013-2014	R
RR 2T RACING					300	2013-2014	R
RR 4T ENDURO					350	2013-2014	R
RR 4T RACING					350	2014	R
RR 4T ENDURO					400	2013-2014	R
RR 4T ENDURO					450	2013-2014	R
RR 4T RACING					450	2013-2014	R
RR 4T ENDURO					498	2013-2014	R
RR 4T RACING					498	2013-2014	R
KTM							
SMC R					690	2012-2014	R
SUPERMOTO					690	2007-2008	R
SUPERMOTO PRESTIGE					690	2007-2008	R
LC8 ADVENTURE					950	2002-2006	R
LC8 ADVENTURE S					950	2004-2006	R
SUPER ENDURO R					950	2006-2008	R
LC8 ADVENTURE ABS					990	2006-2008	R
LC8 ADVENTURE R					990	2010-2012	R
LC8 ADVENTURE S					990	2006-2008	R
KT11RI	240	110	4	6	125	6,5	-
CCM							
DS					644	2002-2006	R
R30					644	2002-2006	R
GAS GAS							
EC					125	1996-2011	R
EC RACING					125	2013-2014	R
MC					125	1996-2009	R
EC					200	2000-2014	R
HOBBY					200	2007	R
EC					250	1996-2010	R
EC 2T					250	2011-2014	R
EC 4T					250	2011-2014	R
EC F RACING					250	2013-2014	R
EC RACING					250	2012-2013	R
MC					250	1996-2009	R
EC					300	1996-2012	R
EC 2T					300	2013-2014	R
EC F RACING					300	2013-2014	R
EC RACING					300	2012-2013	R
MC					300	1996-2009	R
EC					400	2002	R
EC					400	2006-2007	R
FSE					400	2002	R
MC					400	2002	R
MC					400	2006-2007	R
PAMPERA					400	2006-2007	R
EC					450	2003-2007	R
EC F					450	2013-2014	R
FSE					450	2003-2006	R
FSR					450	2007	R
MC					450	2003	R
MC					450	2007	R
HUSABERG							
TE					125	2012-2014	R
FE					250	2013-2014	R

CODICE P/N	Ø Esterno Ø Outer	Ø Interno Ø Inner	Spessore Tickness	Nr fori No. holes	Interasse fori Bolt pattern	Ø Fori Ø Holes	Campanatura Total height
KT11RI	240	110	4	6	125	6,5	-
TE					250	2011-2014	R
TE					300	2011-2014	R
FE					350	2013-2014	R
FE					390	2010-2012	R
FE					400	2000-2003	R
FE E					400	2001-2003	R
FS C					400	2001-2003	R
FS E					400	2001-2003	R
FE					450	2009-2014	R
FS C					450	2003-2008	R
FS E					450	2003-2008	R
FX					450	2010	R
FC					501	1999-2003	R
FE E					501	1999-2004	R
FE S					501	1999-2004	R
FE					510	2013-2014	R
FC					550	2001-2005	R
FE E					550	2004-2008	R
FE					570	2010-2012	R
FS					570	2010	R
FC					600	1999-2003	R
FE E					600	1999-2002	R
FE S					600	1999-2003	R
FE E					650	2001-2008	R
FS C					650	2001-2008	R
FS E					650	2001-2004	R
FS E					650	2005-2008	R
FX E					650	2001-2005	R
HUSQVARNA							
TC					125	2014-2015	R
TE					125	2014	R
FC					250	2014	R
FE					250	2014-2015	R
TC					250	2014	R
TE					250	2014	R
TE					300	2014-2015	R
FC					350	2014-2015	R
FE					350	2014	R
FC					450	2014-2015	R
FE					450	2014-2015	R
FE					510	2014	R
KTM							
EXC					125	1998-2015	R
EXC SIX DAYS					125	2009-2015	R
GS					125	1988-1997	R
MX					125	1988-1992	R
SX					125	1993-1997	R
SX					125	1998-2015	R
SXS					125	2000-2010	R
SX					144	2007-2010	R
SX					150	2008-2015	R
EXC					200	1998-2015	R
MXC					200	1998-2003	R
SX					200	2003-2009	R
XC W					200	2006-2009	R
EXC					250	1998-2014	R
EXC E					250	2015	R
EXC F					250	2003-2015	R
EXC F SIX DAYS					250	2009-2015	R
EXC G					250	2004-2009	R
EXC SIX DAYS					250	2009-2015	R
GS					250	1988-1997	R
MX					250	1988-1992	R
MXC					250	1998-2003	R
SX					250	1993-2015	R
SX F					250	2003-2015	R
SXS					250	2003-2010	R
SXS F					250	2006-2009	R
XC F					250	2007-2012	R
XC W					250	2006-2012	R

I codici che terminano in D indicano sempre il disco Wave®
The codes that finish in D indicate always disc Wave®

FL > disco anteriore sinistro / front left disk
FR > disco anteriore destro / front right disk
R > disco posteriore / rear disk

CODICE P/N	Ø Esterno Ø Outer	Ø Interno Ø Inner	Spessore Tickness	Nr fori No. holes	Interasse fori Bolt pattern	Ø Fori Ø Holes	Campanatura Total height
KT11RI	240	110	4	6	125	6,5	-
EXC					300	1997-2014	R
EXC E					300	2015	R
EXC SIX DAYS					300	2009-2015	R
GS					300	1991-1996	R
MX					300	1991-1992	R
MXC					300	1998-2005	R
SX					300	1993	R
SX					300	1997-2003	R
XC					300	2006-2012	R
XC W					300	2006-2012	R
EXC F					350	2010-2015	R
EXC F SIX DAYS					350	2011-2015	R
GS					350	1993	R
SX F					350	2011-2015	R
EXC					380	1998-2002	R
MXC					380	1998-2001	R
SX					380	1998-2002	R
EGS					400	1996-1999	R
EXC					400	1994-1999	R
EXC					400	2000-2011	R
EXC G					400	2004-2006	R
SX					400	2000-2002	R
XC W					400	2007-2009	R
EXC					450	2003-2015	R
EXC R					450	2008-2009	R
EXC SIX DAYS					450	2009-2015	R
MXC					450	2003-2006	R
SMR					450	2004-2014	R
SX F					450	2003-2015	R
SXS					450	2003-2010	R
SXS F					450	2003-2010	R
XC					450	2007-2009	R
XC F					450	2007-2009	R
XC G					450	2006	R
XC W					450	2007-2009	R
EXC					500	2011-2015	R
EXC SIX DAYS					500	2011-2015	R
MX					500	1989-1992	R
SX					500	1993-1995	R
SX F					505	2007-2009	R
XC F					505	2007-2009	R
EXC					520	2000-2002	R
MXC					520	2001-2002	R
SX					520	2000-2002	R
EXC					525	2003-2008	R
MXC					525	2003-2005	R
SMR					525	2004-2005	R
SX					525	2003-2006	R
XC					525	2006-2008	R
XC G					525	2006-2008	R
XC W					525	2006-2008	R
EXC					530	2010-2011	R
EXC R					530	2008-2009	R
EXC SIX DAYS					530	2009	R
SXC					540	1999-2000	R
SXS					540	2001-2006	R
SMR					560	2006-2008	R
GS					600	1993	R
LC4 ENDURO					600	1991-1992	R
MX					600	1990-1992	R
LC4 ADVENTURE					620	1997-1998	R
LC4 SC SUPERCOMP					620	1998-2004	R
LC4 SUPERMOTO					620	1999-2001	R
LC4 SC SUPERCOMP					625	2002	R
LC4 SUPERMOTO					625	2002-2004	R
SMC					625	2005-2008	R
SXC					625	2003-2008	R
LC4 ADVENTURE					640	1998-2007	R
LC4 ENDURO					640	1999-2007	R
LC4 SUPERMOTO					640	1998-2007	R
SMC					660	2003-2007	R

CODICE P/N	Ø Esterno Ø Outer	Ø Interno Ø Inner	Spessore Tickness	Nr fori No. holes	Interasse fori Bolt pattern	Ø Fori Ø Holes	Campanatura Total height
KT11RID	220	110	4	6	125	6,5	-
CCM							
DS					644	2002-2006	R
R30					644	2002-2006	R
GAS GAS							
EC					125	1996-2011	R
EC RACING					125	2013-2014	R
MC					125	1996-2009	R
EC					200	2000-2014	R
HOBBY					200	2007	R
EC					250	1996-2010	R
EC 2T					250	2011-2014	R
EC 4T					250	2011-2014	R
EC F RACING					250	2013-2014	R
EC RACING					250	2012-2013	R
MC					250	1996-2009	R
EC					300	1996-2012	R
EC 2T					300	2013-2014	R
EC F RACING					300	2013-2014	R
EC RACING					300	2012-2013	R
MC					300	1996-2009	R
EC					400	2002	R
EC					400	2006-2007	R
FSE					400	2002	R
MC					400	2002	R
MC					400	2006-2007	R
PAMPERA					400	2006-2007	R
EC					450	2003-2007	R
EC F					450	2013-2014	R
FSE					450	2003-2006	R
FSR					450	2007	R
MC					450	2003	R
MC					450	2007	R
HUSABERG							
TE					125	2012-2014	R
FE					250	2013-2014	R
TE					250	2011-2014	R
TE					300	2011-2014	R
FE					350	2013-2014	R
FE					390	2010-2012	R
FE					400	2000-2003	R
FE E					400	2001-2003	R
FS C					400	2001-2003	R
FS E					400	2001-2003	R
FE					450	2009-2014	R
FS C					450	2003-2008	R
FS E					450	2003-2008	R
FX					450	2010	R
FC					501	1999-2003	R
FE E					501	1999-2004	R
FE S					501	1999-2004	R
FE					510	2013-2014	R
FC					550	2001-2005	R
FE E					550	2004-2008	R
FE					570	2010-2012	R
FS					570	2010	R
FC					600	1999-2003	R
FE E					600	1999-2002	R
FE S					600	1999-2003	R
FE E					650	2001-2008	R
FS C					650	2001-2008	R
FS E					650	2001-2004	R
FS E					650	2005-2008	R
FX E					650	2001-2005	R
HUSQVARNA							
TC					125	2014-2015	R
TE					125	2014	R
FC					250	2014	R
FE					250	2014-2015	R
TC					250	2014	R
TE					250	2014	R

CODICE P/N	Ø Esterno Ø Outer	Ø Interno Ø Inner	Spessore Tickness	Nr fori No. holes	Interasse fori Bolt pattern	Ø Fori Ø Holes	Campanatura Total height
KT11RID	220	110	4	6	125	6,5	-
TE					300	2014-2015	R
FC					350	2014-2015	R
FE					350	2014	R
FC					450	2014-2015	R
FE					450	2014-2015	R
FE					510	2014	R
KTM							
EXC					125	1998-2015	R
EXC SIX DAYS					125	2009-2015	R
GS					125	1988-1997	R
MX					125	1988-1992	R
STING					125	1998	R
SX					125	1993-1997	R
SX					125	1998-2015	R
SXS					125	2000-2010	R
SX					144	2007-2010	R
SX					150	2008-2015	R
EXC					200	1998-2015	R
MXC					200	1998-2003	R
SX					200	2003-2009	R
XC W					200	2006-2009	R
EXC					250	1998-2014	R
EXC E					250	2015	R
EXC F					250	2003-2015	R
EXC F SIX DAYS					250	2009-2015	R
EXC G					250	2004-2009	R
EXC SIX DAYS					250	2009-2015	R
GS					250	1988-1997	R
MX					250	1988-1992	R
MXC					250	1998-2003	R
SX					250	1993-2015	R
SX F					250	2003-2015	R
SXS					250	2003-2010	R
SXS F					250	2006-2009	R
XC F					250	2007-2012	R
XC W					250	2006-2012	R
EXC					300	1997-2014	R
EXC E					300	2015	R
EXC SIX DAYS					300	2009-2015	R
GS					300	1991-1996	R
MX					300	1991-1992	R
MXC					300	1998-2005	R
SX					300	1993	R
SX					300	1997-2003	R
XC					300	2006-2012	R
XC W					300	2006-2012	R
EXC F					350	2010-2015	R
EXC F SIX DAYS					350	2011-2015	R
GS					350	1993	R
SX F					350	2011-2015	R
EXC					380	1998-2002	R
MXC					380	1998-2001	R
SX					380	1998-2002	R
EGS					400	1996-1999	R
EXC					400	1994-1999	R
EXC					400	2000-2011	R
EXC G					400	2004-2006	R
SX					400	2000-2002	R
XC W					400	2007-2009	R
EXC					450	2003-2015	R
EXC R					450	2008-2009	R
EXC SIX DAYS					450	2009-2015	R
MXC					450	2003-2006	R
SMR					450	2004-2014	R
SX F					450	2003-2015	R
SXS					450	2003-2010	R
SXS F					450	2003-2010	R
XC					450	2007-2009	R
XC F					450	2007-2009	R
XC G					450	2006	R

CODICE P/N	Ø Esterno Ø Outer	Ø Interno Ø Inner	Spessore Tickness	Nr fori No. holes	Interasse fori Bolt pattern	Ø Fori Ø Holes	Campanatura Total height
KT11RID	220	110	4	6	125	6,5	-
XC W					450	2007-2009	R
EXC					500	2011-2015	R
EXC SIX DAYS					500	2011-2015	R
MX					500	1989-1992	R
SX					500	1993-1995	R
SX F					505	2007-2009	R
XC F					505	2007-2009	R
EXC					520	2000-2002	R
MXC					520	2001-2002	R
SX					520	2000-2002	R
EXC					525	2003-2008	R
MXC					525	2003-2005	R
SMR					525	2004-2005	R
SX					525	2003-2006	R
XC					525	2006-2008	R
XC G					525	2006-2008	R
XC W					525	2006-2008	R
EXC					530	2010-2011	R
EXC R					530	2008-2009	R
EXC SIX DAYS					530	2009	R
SXC					540	1999-2000	R
SXS					540	2001-2006	R
SMR					560	2006-2008	R
GS					600	1993	R
LC4 ENDURO					600	1991-1992	R
MX					600	1990-1992	R
LC4 ADVENTURE					620	1997-1998	R
LC4 SC SUPERCOMP					620	1998-2004	R
LC4 SUPERMOTO					620	1999-2001	R
LC4 SC SUPERCOMP					625	2002	R
LC4 SUPERMOTO					625	2002-2004	R
SMC					625	2005-2008	R
SXC					625	2003-2008	R
LC4 ADVENTURE					640	1998-2007	R
LC4 ENDURO					640	1999-2007	R
LC4 SUPERMOTO					640	1998-2007	R
SMC					660	2003-2007	R

KW01FID	250	100,5	3	4	116	6,5	-
KAWASAKI							
KX					125	1989-2002	FL
KDX					250	1991-1993	FL
KLX R					250	1993-1996	FL
KX					250	1987-2002	FL
KLX R					300	1997-2007	FL
KX					500	1986-2004	FL
KLX R					650	1993-1997	FL

KW01RID	220	101	4,5	6	116	6,5	-
KAWASAKI							
KX					125	1989-2002	R
KDX					200	2004-2006	R
KDX					220	2003-2004	R
KDX					220	2005	R
KX					250	1989-2002	R
KLX R					300	1997-2007	R
KX					500	1989-2004	R
KLX R					650	1993-2003	R

DISKS / DISCHI

I codici che terminano in D indicano sempre il disco Wave®
The codes that finish in D indicate always disc Wave®

FL > disco anteriore sinistro / front left disk
FR > disco anteriore destro / front right disk
R > disco posteriore / rear disk

CODICE P/N	Ø Esterno Ø Outer	Ø Interno Ø Inner	Spessore Tickness	Nr fori No. holes	Interasse fori Bolt pattern	Ø Fori Ø Holes	Campanatura Total height
KW02FI	270	130	5	6	150	10,5	-
KAWASAKI							
ZX					400	1988-1989	FL/FR
GPZ S					500	1989-2006	FL/FR
GPZ R					600	1984-1990	FL/FR
ZX					600	1988-1990	FL/FR
GPZ R					750	1985-1987	FL/FR
GPZ UNITRAK					750	1983-1988	FL/FR
Z 750TURBO					750	1984-1986	R
ELIMINATOR					900	1985-1987	R
GPZ R					900	1984-1989	R
ELIMINATOR					1000	1986-1990	R
GTR					1000	1986-1993	FL/FR
KW04RID	220	100,3	4,5	6	116	10,5	-
KAWASAKI							
KDX					125	1990-1999	R
KDX					220	1994-1996	R
KDX					250	1991-1993	R
KW05FI	250	130	4	9	146	10,5	-
KAWASAKI							
KLR					570	1985-1991	FL
KLR					600	1985-1992	FL
KW07FI	280	130	5	6	150	10,5	-
KAWASAKI							
ELIMINATOR					400	1988-1989	FL/FR
ER5					500	1996-2006	FL
GPZ S					500	1987-1988	FR
ELIMINATOR					600	1986-1994	FL
Z 750TURBO					750	1984-1986	FL/FR
ELIMINATOR					900	1985-1987	FL/FR
GPZ R					900	1984-1989	FL/FR
ELIMINATOR					1000	1986-1990	FL/FR
GPX R					1000	1986-1989	FL/FR
GTR					1000	1994-2006	R
KW09RI	230	82	4	5	104	10,5	-
KAWASAKI							
ZX7R NINJA					750	1996-2003	R
ZX7RR NINJA					750	1996-2003	R
ZXR					750	1989-1995	R
ZXR L					750	1993-1995	R
ZXR R					750	1989-1995	R
ZX9R NINJA					900	1994-1997	R
GTR					1000	1986-1993	R
ZEPHYR					1100	1996-1998	R
KW13FID	300	130	5	9	146	10,5	-
KAWASAKI							
KLE					500	1991-2007	FL

CODICE P/N	Ø Esterno Ø Outer	Ø Interno Ø Inner	Spessore Tickness	Nr fori No. holes	Interasse fori Bolt pattern	Ø Fori Ø Holes	Campanatura Total height
KW15RID	240	100,5	4,5	4	120	10,5	-
KAWASAKI							
ZXR					400	1991-2002	R
ZEPHYR					550	1993-2001	R
ZZR					600	1993-2006	R
GPX R					750	1986-1990	R
ZR7					750	1999-2003	R
ZR7S					750	2001-2003	R
KW16RI	230	120	4	6	136	10,5	-
KAWASAKI							
KLE					500	1991-2007	R
KLR					650	1987-2007	R
KW18FID	220	97	3	6	112	9,5	-
KAWASAKI							
KX					80	1984-1999	FL
KX					85	2000-2015	FL
KX					100	2005-2015	FL
KW18RID	184	84	3	4	100	9,5	-
KAWASAKI							
KX					80	1997-1999	R
KX					85	2000-2015	R
KX					100	2005-2015	R
YAMAHA							
YZ					80	1986-1992	FL
YZ					80	1986-1992	R
KW19RI	230	100,3	4	6	116	10,5	-
KAWASAKI							
KLX					250	1993-1994	R
KLX R					250	1993-1994	R
KLX					650	1993-1996	R
KW22RI	250	100	5	4	120	10,5	-
KAWASAKI							
ZZR					1100	1993-1999	R
KW30RI	220	100	4	4	120	10,5	-
KAWASAKI							
ZX6R NINJA					600	1998-2001	R
ZX6R NINJA					600	2007-2014	R
ZX6RR NINJA					600	2003-2006	R
ZX6R NINJA					636	2002-2006	R
ZX6R NINJA					636	2013-2015	R
ZX6R NINJA ABS					636	2013-2015	R
ER6F					650	2006-2014	R
ER6N					650	2006-2014	R
VERSYS					650	2007-2014	R
Z 750					750	2004-2006	R
Z 750 S					750	2005-2006	R
ZX9R NINJA					900	1998-2003	R
Z 1000					1000	2003-2006	R
ZX-10R					1000	2004-2014	R
ZX-10R ABS					1000	2011-2014	R

CODICE P/N	Ø Esterno Ø Outer	Ø Interno Ø Inner	Spessore Tickness	Nr fori No. holes	Interasse fori Bolt pattern	Ø Fori Ø Holes	Campanatura Total height
KW30RID	220	100,5	4,5	4	120	10,5	-
KAWASAKI							
KX					65	2000-2015	FL
ZX6R NINJA					600	1998-2001	R
ZX6R NINJA					600	2007-2014	R
ZX6RR NINJA					600	2003-2006	R
ZX6R NINJA					636	2002-2006	R
ZX6R NINJA					636	2013-2015	R
ZX6R NINJA ABS					636	2013-2015	R
ER6F					650	2006-2014	R
ER6N					650	2006-2014	R
VERSYS					650	2007-2014	R
Z 750					750	2004-2006	R
Z 750 S					750	2005-2006	R
ZX9R NINJA					900	1998-2003	R
Z 1000					1000	2003-2006	R
ZX-10R					1000	2004-2015	R
ZX-10R ABS					1000	2011-2015	R
KW32RID	178,5	79,5	3	4	95	9,5	-
KAWASAKI							
KX					65	2000-2015	R
SUZUKI							
RM					65	2003-2005	FL
RM					65	2003-2005	R
KW34RID	230	100,5	5	4	120	10,5	-
KAWASAKI							
ZX12R NINJA					1200	2000-2006	R
KW35FID	250	100,5	3	4	116	8,5	-
KAWASAKI							
KX					125	2003-2005	FL
KX					250	2003-2005	FL
KX F					250	2004-2005	FL
SUZUKI							
RMZ					250	2004-2006	FL
KW36RID	250	100,2	5	5	120	10,5	-
KAWASAKI							
ZRX					1100	1997-2000	R
ZRX					1200	2001-2006	R
ZRX R					1200	2001-2006	R
ZRX S					1200	2001-2006	R
KW38RID	260	141	5	4	162	10,5	-
KAWASAKI							
KLV					1000	2004-2007	R
SUZUKI							
DL V-STROM					650	2004-2012	R
DL V-STROM ABS					650	2007-2012	R
DL V-STROM					1000	2002-2010	R
DL V-STROM ABS					1000	2014	R

CODICE P/N	Ø Esterno Ø Outer	Ø Interno Ø Inner	Spessore Tickness	Nr fori No. holes	Interasse fori Bolt pattern	Ø Fori Ø Holes	Campanatura Total height
KW39FID	250	109,5	3	4	126	9,5	-
KAWASAKI							
KX					125	2006-2008	FL
KX					250	2006-2008	FL
KX F					250	2006-2014	FL
KLX R					450	2007-2014	FL
KX F					450	2006-2014	FL
KW40RID	250	110,5	5	4	130	10,5	-
KAWASAKI							
Z 750					750	2007-2012	R
Z 750 ABS					750	2007-2012	R
Z 750 R					750	2011-2012	R
Z 750 R - ABS					750	2011-2012	R
Z 800					800	2013	R
Z 800 ABS					800	2013	R
Z 800e					800	2013	R
Z 800e ABS					800	2013	R
VERSYS					1000	2012-2014	R
Z 1000					1000	2007-2014	R
Z 1000 - ABS					1000	2007-2014	R
Z 1000 SX					1000	2011-2014	R
Z 1000 SX ABS					1000	2011-2014	R
ZZR					1400	2006-2007	R
ZZR ABS					1400	2008-2014	R
KW41RID	240	116	4	4	133	10,5	-
KAWASAKI							
KX					125	2003-2008	R
KX					250	2003-2008	R
KX F					250	2004-2015	R
KLX R					450	2007-2014	R
KX F					450	2006-2015	R
SUZUKI							
RMZ					250	2004-2006	R
MA01FI	155	39	3	5	60	6,5	-
MALAGUTI							
F10					50	1992-2005	FL
F10 JET LINE					50	1997-1999	FL
F12 PHANTOM twin disk					50	1999-2005	FL
F15 FIREFOX L.C.					50	1999-2005	FL
YESTERDAY					50	1997-2001	FL
F12 PHANTOM twin disk					100	1999-2001	FL
MADISON					250	1999-2003	FL
MADISON K					400	2002-2006	R
MOTRON							
COMPACT WF					50	1988-1992	FL
PEUGEOT							
ZENITH LUXE					50	1996	FL
MA04FID	200	58,5	3	3	80	8,5	-
MALAGUTI							
F12 PHANTOM twin disk					50	1999-2005	FL
F15 FIREFOX L.C.					50	1999-2005	FL
F12 PHANTOM twin disk					100	1999-2001	FL

I codici che terminano in D indicano sempre il disco Wave®
The codes that finish in D indicate always disc Wave®

FL > disco anteriore sinistro / front left disk
FR > disco anteriore destro / front right disk
R > disco posteriore / rear disk

CODICE P/N	Ø Esterno Ø Outer	Ø Interno Ø Inner	Spessore Tickness	Nr fori No. holes	Interasse fori Bolt pattern	Ø Fori Ø Holes	Campanatura Total height
MB02FI	180	48	3,5	4	66	10,5	-
MBK							
BOOSTER 12 WHEELS					50	2000-2010	FL
BOOSTER NAKED 12 WHEELS					50	2009	FL
BOOSTER SPIRIT					50	1999-2005	FL
YAMAHA							
BUMP					50	1997-2001	FL
BWS (Rear Drum Model)					50	1999-2014	FL
BWS NAKED (Rear Drum Model)					50	2003-2004	FL
BWS NAKED (Rear Drum Model)					50	2009-2014	FL
BWS NEXT GENERATION					50	1996-1998	FL
SPY (Rear Drum Model)					50	1995-1998	FL

CODICE P/N	Ø Esterno Ø Outer	Ø Interno Ø Inner	Spessore Tickness	Nr fori No. holes	Interasse fori Bolt pattern	Ø Fori Ø Holes	Campanatura Total height
MB02FID	180	48,5	3,5	4	66	10,5	-
MBK							
BOOSTER 12 WHEELS					50	2000-2010	FL
BOOSTER NAKED 12 WHEELS					50	2009	FL
BOOSTER SPIRIT					50	1999-2005	FL
YAMAHA							
BUMP					50	1997-2001	FL
BWS (Rear Drum Model)					50	1999-2014	FL
BWS NAKED (Rear Drum Model)					50	2003-2004	FL
BWS NAKED (Rear Drum Model)					50	2009-2014	FL
BWS NEXT GENERATION					50	1996-1998	FL
SPY (Rear Drum Model)					50	1995-1998	FL

CODICE P/N	Ø Esterno Ø Outer	Ø Interno Ø Inner	Spessore Tickness	Nr fori No. holes	Interasse fori Bolt pattern	Ø Fori Ø Holes	Campanatura Total height
MB03FI	220	54	4	4	76,5	8,5	-
MBK							
SKYLINER					125	1998-2010	FL
SKYLINER					150	1998-2002	FL
SKYLINER					180	2003	FL
YAMAHA							
YP MAJESTY					125	1998-2009	FL
YP MAJESTY					150	1998-2002	FL
YP MAJESTY					180	2003-2006	FL

CODICE P/N	Ø Esterno Ø Outer	Ø Interno Ø Inner	Spessore Tickness	Nr fori No. holes	Interasse fori Bolt pattern	Ø Fori Ø Holes	Campanatura Total height
MB03FID	220	55	4	4	76,5	8,5	-
MBK							
SKYLINER					125	1998-2010	FL
SKYLINER					150	1998-2002	FL
SKYLINER					180	2003	FL
YAMAHA							
YP MAJESTY					125	1998-2009	FL
YP MAJESTY					150	1998-2002	FL
YP MAJESTY					180	2003-2006	FL

CODICE P/N	Ø Esterno Ø Outer	Ø Interno Ø Inner	Spessore Tickness	Nr fori No. holes	Interasse fori Bolt pattern	Ø Fori Ø Holes	Campanatura Total height
MB04FID	270	129	5	5	146	8,5	-
MBK							
KILIBRE					300	2003-2004	FR
YAMAHA							
XC					300	2004-2006	FR
XC VERSITY					300	2003	FR

CODICE P/N	Ø Esterno Ø Outer	Ø Interno Ø Inner	Spessore Tickness	Nr fori No. holes	Interasse fori Bolt pattern	Ø Fori Ø Holes	Campanatura Total height
MB04RID	240	92,5	5	4	114	8,5	-
MBK							
KILIBRE					300	2003-2004	R
YAMAHA							
X-CITY					125	2008-2013	R
XC					300	2004-2006	R
XC VERSITY					300	2003	R

CODICE P/N	Ø Esterno Ø Outer	Ø Interno Ø Inner	Spessore Tickness	Nr fori No. holes	Interasse fori Bolt pattern	Ø Fori Ø Holes	Campanatura Total height
MV01RID	210	108	5	4	124,7	7,5	-
MV AGUSTA							
BRUTALE					750	2001-2006	R
BRUTALE S					750	2001-2006	R
BRUTALE SERIE ORO					750	2002-2006	R
F4					750	2000-2006	R
F4 S					750	2000-2006	R
F4 SENNA					750	2000-2006	R
F4 SERIE ORO					750	1998-1999	R
BRUTALE R					910	2006-2008	R
BRUTALE S					910	2006-2008	R
F4 312 RR					1000	2007-2008	R
F4 MAMBA					1000	2004-2007	R
F4 R					1000	2006-2007	R
F4 RR CORSACORTA					1000	2011-2012	R
F4 S					1000	2004-2007	R
F4 SENNA					1000	2006	R
F4 TAMBURINI					1000	2006-2008	R
BRUTALE RR					1078	2008-2009	R

CODICE P/N	Ø Esterno Ø Outer	Ø Interno Ø Inner	Spessore Tickness	Nr fori No. holes	Interasse fori Bolt pattern	Ø Fori Ø Holes	Campanatura Total height
PE01FI	190	58	3,8	3	80	8,5	-
BENELLI							
491 GT					50	1997-2000	FL
491 K2 AIR					50	1998-2000	FL
491 RACING					50	1999	FL
491 RACING					50	1999	R
491 SPORT					50	1998	FL
K2 LC					50	1999	FL
K2					100	1999	FL
VELVET					250	1999-2003	R
BETA							
QUADRA (Rear Drum Model)					50	1997-2001	FL
MALAGUTI							
CROSSER CR1 (Rear Drum Model)					50	1995-1998	FL
CROSSER EL					50	1997	FL
F12 PHANTOM					50	1994-1998	FL
F12 PHANTOM A.C.					50	1999-2003	FL
F12 PHANTOM L.C.					50	1994-1998	FL
F12 PHANTOM twin disk					50	1999-2005	R
F12R PHANTOM A.C.					50	2007-2011	FL
F12R PHANTOM A.C.					50	2007-2011	R
F12R PHANTOM L.C.					50	2007-2011	FL
F12R PHANTOM L.C.					50	2007-2011	R
F15 FIREFOX (Rear Drum Model)					50	1996-1998	FL
F15 FIREFOX L.C.					50	1999-2005	R
F15 FIREFOX twin disk					50	1996-1998	FL
F15 FIREFOX twin disk					50	1996-1998	R
F12 PHANTOM twin disk					100	1999-2001	R
MOTRON							
COMPACT RACING ES					50	1989-1992	FL
GL4 FLASH ID					50	1989-1993	FL
RZ1 ES					50	1989-1994	FL
PEUGEOT							
BUXY (Brembo)					50	1994-1999	FL
ELYSEO (A.J.P.)					50	1998-2000	FL
SPEEDAKE (Brembo)					50	1994-1999	FL
SQUAB (AJP)					50	1994-2001	FL
SQUAB (Hengtong)					50	1994-2001	FL

CODICE P/N	Ø Esterno Ø Outer	Ø Interno Ø Inner	Spessore Tickness	Nr fori No. holes	Interasse fori Bolt pattern	Ø Fori Ø Holes	Campanatura Total height
PE01FI	190	58	3,8	3	80	8,5	-
SV GEO					50	1992	FL
TREKKER (AJP)					50	1997	FL
TREKKER (Hengtong)					50	1997	FL
VIVACITY (AJP)					50	1999	FL
SV GEO					80	1991	FL
TREKKER					100	1998	FL
VIVACITY (AJP)					100	1999-2004	FL
VIVACITY (Hengtong)					100	2005	FL
SV GEO					125	1991-1995	FL

CODICE P/N	Ø Esterno Ø Outer	Ø Interno Ø Inner	Spessore Tickness	Nr fori No. holes	Interasse fori Bolt pattern	Ø Fori Ø Holes	Campanatura Total height
PE01FID	190	58,5	3,8	3	80	8,5	-
BENELLI							
491 GT					50	1997-2000	FL
491 K2 AIR					50	1998-2000	FL
491 RACING					50	1999	FL
491 RACING					50	1999	R
491 SPORT					50	1998	FL
K2 LC					50	1999	FL
K2					100	1999	FL
VELVET					250	1999-2003	R
BETA							
QUADRA (Rear Drum Model)					50	1997-2001	FL
MALAGUTI							
CROSSER CR1 (Rear Drum Model)					50	1995-1998	FL
CROSSER EL					50	1997	FL
F12 PHANTOM					50	1994-1998	FL
F12 PHANTOM A.C.					50	1999-2003	FL
F12 PHANTOM L.C.					50	1994-1998	FL
F12 PHANTOM twin disk					50	1999-2005	R
F12R PHANTOM A.C.					50	2007-2011	R
F12R PHANTOM A.C.					50	2007-2011	FL
F12R PHANTOM L.C.					50	2007-2011	R
F12R PHANTOM L.C.					50	2007-2011	FL
F15 FIREFOX (Rear Drum Model)					50	1996-1998	FL
F15 FIREFOX L.C.					50	1999-2005	R
F15 FIREFOX twin disk					50	1996-1998	FL
F15 FIREFOX twin disk					50	1996-1998	R
F12 PHANTOM twin disk					100	1999-2001	R
MOTRON							
COMPACT RACING ES					50	1989-1992	FL
GL4 FLASH ID					50	1989-1993	FL
RZ1 ES					50	1989-1994	FL
PEUGEOT							
BUXY (Brembo)					50	1994-1999	FL
ELYSEO (A.J.P.)					50	1998-2000	FL
SPEEDAKE (Brembo)					50	1994-1999	FL
SQUAB (AJP)					50	1994-2001	FL
SQUAB (Hengtong)					50	1994-2001	FL
SV GEO					50	1992	FL
TREKKER (AJP)					50	1997	FL
TREKKER (Hengtong)					50	1997	FL
VIVACITY (AJP)					50	1999	FL
SV GEO					80	1991	FL
TREKKER					100	1998	FL
VIVACITY (AJP)					100	1999-2004	FL
VIVACITY (Hengtong)					100	2005	FL
SV GEO					125	1991-1995	FL

CODICE P/N	Ø Esterno Ø Outer	Ø Interno Ø Inner	Spessore Tickness	Nr fori No. holes	Interasse fori Bolt pattern	Ø Fori Ø Holes	Campanatura Total height
PE02FI	180	58	3,5	3	80	11,5	-
PEUGEOT							
SPEEDFIGHT 2 A/C					50	2001	FL
SPEEDFIGHT 2 L/C DD					50	2001	FL
SPEEDFIGHT 2 L/C DD					50	2001	R
SPEEDFIGHT LC (Brembo)					50	1996-2000	FL
SPEEDFIGHT					100	1997	FL
SPEEDFIGHT					100	1997	R

CODICE P/N	Ø Esterno Ø Outer	Ø Interno Ø Inner	Spessore Tickness	Nr fori No. holes	Interasse fori Bolt pattern	Ø Fori Ø Holes	Campanatura Total height
PE02FID	180	58,5	3,5	3	80	11,5	-
PEUGEOT							
SPEEDFIGHT 2 A/C					50	2001	FL
SPEEDFIGHT 2 L/C DD					50	2001	FL
SPEEDFIGHT 2 L/C DD					50	2001	R
SPEEDFIGHT LC (Brembo)					50	1996-2000	FL
SPEEDFIGHT					100	1997	FL
SPEEDFIGHT					100	1997	R

CODICE P/N	Ø Esterno Ø Outer	Ø Interno Ø Inner	Spessore Tickness	Nr fori No. holes	Interasse fori Bolt pattern	Ø Fori Ø Holes	Campanatura Total height
PI01FI	200	97	4	5	108,5	6,5	-
GILERA							
DNA (Grimeca)					50	2000-2002	R
DNA (Hengtong)					50	2000-2005	R
RUNNER VXR 4t (Grimeca)					125	2001-2003	R
LML							
STAR 2T (Rear Drum Model)					125	2010-2012	FR
STAR 4T (Rear Drum Model)					125	2010-2012	FR
STAR DELUXE (Rear Drum Model)					125	2001-2003	FR
STAR 2T (Rear Drum Model)					150	2010-2012	FR
STAR 4T (Rear Drum Model)					150	2010-2012	FR
STAR DELUXE (Rear Drum Model)					150	2001-2003	FR
STAR 4T (Rear Drum Model)					151	2010-2012	FR
STAR 4T (Rear Drum Model)					200	2010-2012	FR
MALAGUTI							
CENTRO BASE					50	1993-1994	FR
CENTRO SL					50	1994-2000	FR
CENTRO SL CAT					50	1994-2000	FR
PIAGGIO							
FREE					50	1995-2000	FR
QUARTZ (Rear Drum Model)					50	1991-1995	FL
SFERA ET2					50	1997	FL
SFERA RST					50	1995-2001	FL
VESPA ET2					50	1997-2005	FL
VESPA ET4					50	2001-2004	FL
VESPA LX 2T (Rear Drum Model)					50	2005-2013	FL
VESPA LX 4T (Rear Drum Model)					50	2005-2013	FL
VESPA S 2T (Rear Drum Model)					50	2007-2013	FL
VESPA S 4T (Rear Drum Model)					50	2008-2013	FL
ZIP SP 2T (Rear Drum Model)					50	1996-2013	FL
SKIPPER					80	1994-1995	FL
HEXAGON LX					125	1998-2001	FL
SFERA 4t					125	1996-2001	FL
SKIPPER					125	1993-1997	FL
SUPER HEXAGON GTX (grimeca caliper)					125	2000	FL
SUPER HEXAGON GTX (heng tong caliper)					125	2000	FL
SUPER HEXAGON GTX (heng tong caliper)					125	2000	R
VESPA ET4					125	1996-2005	FL
VESPA LX (Rear Drum Model)					125	2005-2013	FL
VESPA PX					125	1998-2011	FR
VESPA S (Rear Drum Model)					125	2007-2013	FL
VESPA S SPORT (Rear Drum Model)					125	2011-2013	FL
SKIPPER					150	1993-1997	FL
VESPA ET4					150	1999-2005	FL
VESPA LX					150	2005-2012	FL
VESPA PX (Rear Drum Model)					150	1998-2013	FR
VESPA S (Rear Drum Model)					150	2007-2012	FL
VESPA S SPORT (Rear Drum Model)					150	2011-2012	FL
HEXAGON LXT (Rear Drum Model)					180	1998-2001	FL
SUPER HEXAGON GTX (grimeca caliper)					180	2000	FL
SUPER HEXAGON GTX (grimeca caliper)					180	2000	R
SUPER HEXAGON GTX (heng tong caliper)					180	2000	FL
SUPER HEXAGON GTX (heng tong caliper)					180	2000	R
VESPA PX					200	1998-2007	FR
HEXAGON GT					250	1998-2001	FL
HEXAGON GTX					250	1998-2000	FR
SUPER HEXAGON GT-GTX					250	2000	FL
SUPER HEXAGON GT-GTX					250	2000	R

DISKS / DISCHI

I codici che terminano in D indicano sempre il disco Wave®
The codes that finish in D indicate always disc Wave®

FL > disco anteriore sinistro / front left disk
FR > disco anteriore destro / front right disk
R > disco posteriore / rear disk

CODICE P/N	Ø Esterno Ø Outer	Ø Interno Ø Inner	Spessore Tickness	Nr fori No. holes	Interasse fori Bolt pattern	Ø Fori Ø Holes	Campanatura Total height
PI01FID	200	97	4	5	108,5	6,5	-
GILERA							
DNA (Grimeca)					50	2000-2002	R
DNA (Hengtong)					50	2000-2005	R
RUNNER VXR 4t (Grimeca)					125	2001-2003	R
LML							
STAR 2T (Rear Drum Model)					125	2010-2012	FR
STAR 4T (Rear Drum Model)					125	2010-2012	FR
STAR DELUXE (Rear Drum Model)					125	2001-2003	FR
STAR 2T (Rear Drum Model)					150	2010-2012	FR
STAR 4T (Rear Drum Model)					150	2010-2012	FR
STAR DELUXE (Rear Drum Model)					150	2001-2003	FR
STAR 4T (Rear Drum Model)					151	2010-2012	FR
STAR 4T (Rear Drum Model)					200	2010-2012	FR
MALAGUTI							
CENTRO BASE					50	1993-1994	FR
CENTRO SL					50	1994-2000	FR
CENTRO SL CAT					50	1994-2000	FR
PIAGGIO							
FREE					50	1995-2000	FR
QUARTZ (Rear Drum Model)					50	1991-1995	FL
SFERA ET2					50	1997	FL
SFERA RST					50	1995-2001	FL
VESPA ET2					50	1997-2005	FL
VESPA ET4					50	2001-2004	FL
VESPA LX 2T (Rear Drum Model)					50	2005-2013	FL
VESPA LX 4T (Rear Drum Model)					50	2005-2013	FL
VESPA S 2T (Rear Drum Model)					50	2007-2013	FL
VESPA S 4T (Rear Drum Model)					50	2008-2013	FL
ZIP SP 2T (Rear Drum Model)					50	1996-2013	FL
SKIPPER					80	1994-1995	FL
HEXAGON LX					125	1998-2001	FL
SFERA 4t					125	1996-2001	FL
SKIPPER					125	1993-1997	FL
SUPER HEXAGON GTX (grimeca caliper)					125	2000	FL
SUPER HEXAGON GTX (heng tong caliper)					125	2000	FL
SUPER HEXAGON GTX (heng tong caliper)					125	2000	R
VESPA ET4					125	1996-2005	FL
VESPA LX (Rear Drum Model)					125	2005-2013	FL
VESPA PX					125	1998-2011	FR
VESPA S (Rear Drum Model)					125	2007-2013	FL
VESPA S SPORT (Rear Drum Model)					125	2011-2013	FL
SKIPPER					150	1993-1997	FL
VESPA ET4					150	1999-2005	FL
VESPA LX					150	2005-2012	FL
VESPA PX (Rear Drum Model)					150	1998-2013	FR
VESPA S (Rear Drum Model)					150	2007-2012	FL
VESPA S SPORT (Rear Drum Model)					150	2011-2012	FL
HEXAGON LXT (Rear Drum Model)					180	1998-2001	FL
SUPER HEXAGON GTX (grimeca caliper)					180	2000	FL
SUPER HEXAGON GTX (grimeca caliper)					180	2000	R
SUPER HEXAGON GTX (heng tong caliper)					180	2000	FL
SUPER HEXAGON GTX (heng tong caliper)					180	2000	R
VESPA PX					200	1998-2007	FR
HEXAGON GT					250	1998-2001	FL
HEXAGON GTX					250	1998-2000	FR
SUPER HEXAGON GT-GTX					250	2000	FL
SUPER HEXAGON GT-GTX					250	2000	R
PI03FI	240	125,2	5	5	140	6,5	-
GILERA							
NEXUS					125	2008-2009	R
NEXUS					250	2006-2008	R
NEXUS (Hengtong)					300	2008-2011	R
NEXUS					500	2004-2011	R
NEXUS i.e. SP					500	2006-2008	R

CODICE P/N	Ø Esterno Ø Outer	Ø Interno Ø Inner	Spessore Tickness	Nr fori No. holes	Interasse fori Bolt pattern	Ø Fori Ø Holes	Campanatura Total height
PI03FI	240	125,2	5	5	140	6,5	-
PIAGGIO							
MP3					125	2007-2008	R
MP3 IBRIDO					125	2009-2010	R
MP3 IE					125	2008-2009	R
SUPER HEXAGON GTX (12 WHEELS)					125	2001-2003	FL
X EVO					125	2007-2012	R
X7					125	2008-2009	R
X7 EVO					125	2009-2010	R
X8					125	2004-2006	R
X8 PREMIUM					125	2006-2007	R
SUPER HEXAGON GTX (12 WHEELS)					180	2001-2003	FL
X8					200	2004-2007	R
MP3					250	2006-2008	R
MP3 LT					250	2009	R
MP3 MIC					250	2008-2009	R
X EVO					250	2007-2013	R
X7					250	2008-2009	R
X8					250	2005-2008	R
MP3 IE LT					300	2010-2011	R
MP3 IE MIC					300	2010	R
MP3 LT IBRIDO					300	2010-2013	R
X7 EVO					300	2009-2010	R
BEVERLY					400	2006-2007	R
BEVERLY TOURER					400	2008-2010	R
MP3					400	2007-2008	R
MP3 IE LT					400	2008-2010	R
MP3 IE LT SPORT					400	2008-2010	R
MP3 LT					400	2008-2010	R
MP3 LT SPORT					400	2008-2010	R
MP3 MIC					400	2008-2009	R
X EVO					400	2007-2011	R
X8					400	2006-2008	R
BEVERLY					500	2002-2009	R
BEVERLY CRUISER					500	2007-2012	R
FUOCO					500	2007	R
X9					500	2001-2002	R
X9 EVOLUTION					500	2003-2007	R
X9 EVOLUTION ABS					500	2006-2007	R
PI03FID	240	125,5	5	5	140	6,5	-
GILERA							
NEXUS					125	2008-2009	R
NEXUS					250	2006-2008	R
NEXUS (Hengtong)					300	2008-2011	R
NEXUS					500	2004-2011	R
NEXUS i.e. SP					500	2006-2008	R
PIAGGIO							
MP3					125	2007-2008	R
MP3 IBRIDO					125	2009-2010	R
MP3 IE					125	2008-2009	R
SUPER HEXAGON GTX (12 WHEELS)					125	2001-2003	FL
X EVO					125	2007-2012	R
X7					125	2008-2009	R
X7 EVO					125	2009-2010	R
X8					125	2004-2006	R
X8 PREMIUM					125	2006-2007	R
SUPER HEXAGON GTX (12 WHEELS)					180	2001-2003	FL
X8					200	2004-2007	R
MP3					250	2006-2008	R
MP3 LT					250	2009	R
MP3 MIC					250	2008-2009	R
X EVO					250	2007-2013	R
X7					250	2008-2009	R
X8					250	2005-2008	R
MP3 IE LT					300	2010-2011	R
MP3 IE MIC					300	2010	R
MP3 LT IBRIDO					300	2010-2013	R

CODICE P/N	Ø Esterno Ø Outer	Ø Interno Ø Inner	Spessore Tickness	Nr fori No. holes	Interasse fori Bolt pattern	Ø Fori Ø Holes	Campanatura Total height
PI03FID	240	125,5	5	5	140	6,5	-
X7 EVO					300	2009-2010	R
BEVERLY					400	2006-2007	R
BEVERLY TOURER					400	2008-2010	R
MP3					400	2007-2008	R
MP3 IE LT					400	2008-2010	R
MP3 IE LT SPORT					400	2008-2010	R
MP3 LT					400	2008-2010	R
MP3 LT SPORT					400	2008-2010	R
MP3 MIC					400	2008-2009	R
X EVO					400	2007-2011	R
X8					400	2006-2008	R
BEVERLY					500	2002-2009	R
BEVERLY CRUISER					500	2007-2012	R
FUOCO					500	2007	R
X9					500	2001-2002	R
X9 EVOLUTION					500	2003-2007	R
X9 EVOLUTION ABS					500	2006-2007	R
PI04FI	260	125,2	4	5	140	6,5	-
GILERA							
NEXUS					125	2008-2009	FL
NEXUS					250	2006-2008	FL
NEXUS (Hengtong)					300	2008-2011	FL
NEXUS					500	2004-2011	FL/FR
NEXUS i.e. SP					500	2006-2008	FL/FR
PIAGGIO							
BEVERLY (grimeca caliper)					125	2002-2006	FL
BEVERLY (grimeca caliper)					125	2002-2006	R
BEVERLY (heng tong caliper)					125	2002-2007	FL
BEVERLY (heng tong caliper)					125	2002-2007	R
BEVERLY S					125	2007	R
BEVERLY S					125	2007	FL
BEVERLY TOURER					125	2008-2010	FL
BEVERLY TOURER					125	2008-2010	R
CARNABY					125	2007-2010	FL
CARNABY					125	2007-2010	R
X EVO					125	2007-2012	FL
X7					125	2008-2009	FL
X7 EVO					125	2009-2010	FL
X8					125	2004-2006	FL
X8 STREET					150	2006-2008	FL
X9					180	2002-2007	FL/FR
X9					180	2002-2007	R
BEVERLY (grimeca caliper)					200	2002-2006	FL
BEVERLY (grimeca caliper)					200	2002-2006	R
BEVERLY (heng tong caliper)					200	2002-2006	FL
BEVERLY (heng tong caliper)					200	2002-2006	R
CARNABY					200	2007-2009	FL
CARNABY					200	2007-2009	R
X8					200	2004-2005	FL
BEVERLY					250	2004-2007	FL
BEVERLY					250	2004-2007	R
BEVERLY CRUISER					250	2007-2009	FL
BEVERLY SPORT					250	2006-2008	FL
BEVERLY TOURER					250	2008-2009	FL
BEVERLY TOURER					250	2008-2009	R
CARNABY					250	2008-2009	FL
CARNABY					250	2008-2009	R
X EVO					250	2007-2013	FL
X7					250	2008-2009	FL
X8					250	2005-2008	FL
BEVERLY TOURER					300	2009-2010	FL
BEVERLY TOURER					300	2009-2010	R
CARNABY CRUISER					300	2009-2012	FL
CARNABY CRUISER					300	2009-2012	R
X7 EVO					300	2009-2011	FL
BEVERLY					400	2006-2007	FL

CODICE P/N	Ø Esterno Ø Outer	Ø Interno Ø Inner	Spessore Tickness	Nr fori No. holes	Interasse fori Bolt pattern	Ø Fori Ø Holes	Campanatura Total height
PI04FI	260	125,2	4	5	140	6,5	-
BEVERLY TOURER					400	2008-2010	FL/FR
BEVERLY					500	2002-2009	FL/FR
BEVERLY CRUISER					500	2007-2012	FL/FR
X9					500	2001-2002	FL/FR
X9 EVOLUTION					500	2003-2007	FL/FR
X9 EVOLUTION ABS					500	2006-2007	FL/FR
PI04FID	260	125	4	5	140	6,5	-
GILERA							
NEXUS					125	2008-2009	FL
NEXUS					250	2006-2008	FL
NEXUS (Hengtong)					300	2008-2011	FL
NEXUS					500	2004-2011	FL/FR
NEXUS i.e. SP					500	2006-2008	FL/FR
PIAGGIO							
BEVERLY (grimeca caliper)					125	2002-2006	FL
BEVERLY (grimeca caliper)					125	2002-2006	R
BEVERLY (heng tong caliper)					125	2002-2007	FL
BEVERLY (heng tong caliper)					125	2002-2007	R
BEVERLY S					125	2007	R
BEVERLY S					125	2007	FL
BEVERLY TOURER					125	2008-2010	FL
BEVERLY TOURER					125	2008-2010	R
CARNABY					125	2007-2010	FL
CARNABY					125	2007-2010	R
X EVO					125	2007-2012	FL
X7					125	2008-2009	FL
X7 EVO					125	2009-2010	FL
X8					125	2004-2006	FL
X8 STREET					150	2006-2008	FL
X9					180	2002-2007	FL/FR
X9					180	2002-2007	R
BEVERLY (grimeca caliper)					200	2002-2006	FL
BEVERLY (grimeca caliper)					200	2002-2006	R
BEVERLY (heng tong caliper)					200	2002-2006	FL
BEVERLY (heng tong caliper)					200	2002-2006	R
CARNABY					200	2007-2009	FL
CARNABY					200	2007-2009	R
X8					200	2004-2005	FL
BEVERLY					250	2004-2007	FL
BEVERLY					250	2004-2007	R
BEVERLY CRUISER					250	2007-2009	FL
BEVERLY SPORT					250	2006-2008	FL
BEVERLY TOURER					250	2008-2009	FL
BEVERLY TOURER					250	2008-2009	R
CARNABY					250	2008-2009	FL
CARNABY					250	2008-2009	R
X EVO					250	2007-2013	FL
X7					250	2008-2009	FL
X8					250	2005-2008	FL
BEVERLY TOURER					300	2009	FL
BEVERLY TOURER					300	2009-2010	FL
BEVERLY TOURER					300	2010	FL
CARNABY CRUISER					300	2009-2012	FL
CARNABY CRUISER					300	2009-2012	R
X7 EVO					300	2009-2011	FL
BEVERLY					400	2006-2007	FL
BEVERLY TOURER					400	2008-2010	FL/FR
BEVERLY					500	2002-2009	FL/FR
BEVERLY CRUISER					500	2007-2012	FL/FR
X9					500	2001-2002	FL/FR
X9 EVOLUTION					500	2003-2007	FL/FR
X9 EVOLUTION ABS					500	2006-2007	FL/FR

I codici che terminano in D indicano sempre il disco Wave®
The codes that finish in D indicate always disc Wave®

FL > disco anteriore sinistro / front left disk
FR > disco anteriore destro / front right disk
R > disco posteriore / rear disk

CODICE P/N	Ø Esterno Ø Outer	Ø Interno Ø Inner	Spessore Tickness	Nr fori No. holes	Interasse fori Bolt pattern	Ø Fori Ø Holes	Campanatura Total height
PL04FID	177,5	64,5	4	4	82,5	8,6	-
POLARIS							
PREDATOR					500	2003-2007	FL/FR
PL04RID	196	76,5	4	4	101,5	8,5	-
POLARIS							
PREDATOR					500	2003-2007	R
RF3104	300	56,3	5	5	82,5	8,5	-
HARLEY D.							
FXDB DYNA STREET BOB					1450	2006-2007	FL
FLHR/I ROAD KING					1584	2008-2010	FL/FR
FLHRC ROAD KING CLASSIC					1584	2008-2013	FL/FR
FLHT/I ELECTRA GLIDE STANDARD					1584	2008-2010	FL/FR
FLHTC ELECTRA GLIDE CLASSIC					1584	2008-2013	FL/FR
FLHTCU ELECTRA GLIDE ULTRA CLASSIC					1584	2009-2013	FL/FR
FLHX STREET GLIDE					1584	2008-2013	FL/FR
FLTR/I ROAD GLIDE					1584	2008-2009	FL/FR
FXDB DYNA STREET BOB					1584	2008-2014	FL
FLHP ROAD KING POLICE					1690	2010-2011	FL/FR
FLHTK ELECTRA GLIDE ULTRA LIMITED					1690	2010-2013	FL/FR
FLHTP ELECTRA GLIDE POLICE					1690	2009-2011	FL/FR
FLHX STREET GLIDE					1690	2010-2013	FL/FR
FLTRU					1690	2011	FL/FR
FLTRUSE SCREAM EAGLE ROAD GLIDE					1690	2011	FL/FR
FLTRX ROAD GLIDE CUSTOM					1690	2010-2013	FL/FR
FLHTCUSE BLK ULTRA CLASSIC ELECTRA GLIDE					1800	2008-2013	FL/FR
FLHTCUSE CVO ULTRA CLASSIC ELECTRA GLIDE					1800	2009-2013	FL/FR
FLHXSE CVO STREET GLIDE					1800	2010-2011	FL/FR
RF3105	300	172,5	5	5	172,5	13,5	-
HARLEY D.							
VRSCA V-ROD					1130	2006-2008	FL/FR
VRSCAW V-ROD					1250	2008-2010	FL/FR
VRSCDX NIGHT ROD SPECIAL					1250	2007-2014	FL/FR
VRSCF V-ROD MUSCLE					1250	2008-2014	FL/FR
FXD DYNA SUPER GLIDE					1450	2006-2007	FL
FXDC DYNA SUPER GLIDE CUSTOM					1450	2006-2007	FL
FXDWG DYNA WIDE GLIDE					1450	2006-2007	FL
FXD DYNA SUPER GLIDE					1584	2008-2010	FL
FXDC DYNA SUPER GLIDE CUSTOM					1584	2008-2014	FL
FXDF FAT BOB					1584	2008-2010	FL/FR
FXDF FAT BOB					1584	2011-2014	FL
FXDL DYNA LOW RIDER					1584	2007-2010	FL
FXDWG DYNA WIDE GLIDE					1584	2008-2014	FL
FLD SWITCHBACK					1690	2012-2014	FL
RF3503	300	56,3	5	5	82,5	10,5	-
HARLEY D.							
VRSCA V-ROD					1130	2006-2008	R
VRSCAW V-ROD					1250	2008-2010	R
VRSCDX NIGHT ROD SPECIAL					1250	2007-2014	R
VRSCF V-ROD MUSCLE					1250	2008-2014	R

CODICE P/N	Ø Esterno Ø Outer	Ø Interno Ø Inner	Spessore Tickness	Nr fori No. holes	Interasse fori Bolt pattern	Ø Fori Ø Holes	Campanatura Total height
RF3504	300	56,3	6	5	82,5	10,5	-
HARLEY D.							
FXDB DYNA STREET BOB					1450	2006-2007	R
FLHR/I ROAD KING					1584	2008-2010	R
FLHRC ROAD KING CLASSIC					1584	2008-2013	R
FLHT/I ELECTRA GLIDE STANDARD					1584	2008-2010	R
FLHTC ELECTRA GLIDE CLASSIC					1584	2008-2013	R
FLHTCU ELECTRA GLIDE ULTRA CLASSIC					1584	2009-2013	R
FLHX STREET GLIDE					1584	2008-2013	R
FLTR/I ROAD GLIDE					1584	2008-2009	R
FXDB DYNA STREET BOB					1584	2008-2014	R
FLHP ROAD KING POLICE					1690	2010-2011	R
FLHTK ELECTRA GLIDE ULTRA LIMITED					1690	2010-2013	R
FLHTP ELECTRA GLIDE POLICE					1690	2009-2011	R
FLHX STREET GLIDE					1690	2010-2013	R
FLTRU					1690	2011	R
FLTRUSE SCREAM EAGLE ROAD GLIDE					1690	2011	R
FLTRX ROAD GLIDE CUSTOM					1690	2010-2013	R
FLHTCUSE BLK ULTRA CLASSIC ELECTRA GLIDE					1800	2008-2013	R
FLHTCUSE CVO ULTRA CLASSIC ELECTRA GLIDE					1800	2009-2013	R
FLHXSE CVO STREET GLIDE					1800	2010-2011	R
RF7111	320	176,7	4,6	6	200	13,85	-
DUCATI							
MULTISTRADA DS					1000	2003-2006	FL/FR
MULTISTRADA DS S					1000	2005-2006	FL/FR
MULTISTRADA DS					1100	2007-2009	FL/FR
MULTISTRADA DS S					1100	2007-2009	FL/FR
RF7112	292	156	4	5	170	8,6	-
YAMAHA							
YZF R					125	2008-2013	FL
RF7113	320	211	5	5	230	10,5	-
HONDA							
INTEGRA					700	2012-2013	FR
NC S					700	2012-2013	FR
NC S ABS					700	2012-2013	FR
NC X					700	2012-2013	FR
NC X ABS					700	2012-2013	FR
NC S DCT					750	2014	FR
NC X					750	2014	FR
NC X DCT					750	2014	FR
RF7519	220	119	5	5	135,6	6,6	-
BMW							
HP4					1000	2013-2014	R
S 1000 R					1000	2014	R
S 1000 RR					1000	2010-2014	R
RF7520	245	83,5	5	4	102	9,5	-
DUCATI							
1098					1100	2007-2008	R
1098 S					1100	2007-2008	R
1098 S TRICOLORE					1100	2007-2008	R
STREETFIGHTER					1100	2009-2011	R
STREETFIGHTER S					1100	2009-2013	R
1198					1198	2009-2011	R
1198 S					1198	2009-2010	R
1198 SP					1198	2011	R
1098 R					1200	2008-2009	R

CODICE P/N	Ø Esterno Ø Outer	Ø Interno Ø Inner	Spessore Tickness	Nr fori No. holes	Interasse fori Bolt pattern	Ø Fori Ø Holes	Campanatura Total height
RF7521	250	110,5	6	4	130	10,5	-
KAWASAKI							
Z 750					750	2007-2012	R
Z 750 ABS					750	2007-2012	R
Z 750 R					750	2011-2012	R
Z 750 R - ABS					750	2011-2012	R
Z 800					800	2013	R
Z 800 ABS					800	2013	R
Z 800e					800	2013	R
Z 800e ABS					800	2013	R
VERSYS					1000	2012-2014	R
Z 1000					1000	2007-2014	R
Z 1000 - ABS					1000	2007-2014	R
Z 1000 SX					1000	2011-2014	R
Z 1000 SX ABS					1000	2011-2014	R
ZZR					1400	2006-2007	R
ZZR ABS					1400	2008-2014	R
RF7522	255	106	6	4	124,5	10,5	-
TRIUMPH							
TIGER					800	2010-2014	R
TIGER ABS					800	2011-2014	R
TIGER XC					800	2010-2014	R
TIGER XC ABS					800	2010-2014	R
RF7523	282	132	5	6	150	8,5	-
YAMAHA							
XT Z SUPER TENERE					1200	2010-2014	R
XT ZE SUPER TENERE					1200	2014	R
RF7524	245	83,5	5	4	102	8,5	-
DUCATI							
MONSTER					1200	2014	R
MULTISTRADA					1200	2010-2012	R
MULTISTRADA ABS					1200	2010-2014	R
MULTISTRADA S ABS					1200	2010-2012	R
MULTISTRADA S ABS PIKES PEAK					1200	2012-2014	R
MULTISTRADA S GT					1200	2012-2013	R
MULTISTRADA S SPORT					1200	2011-2012	R
MULTISTRADA S TOURING					1200	2010-2014	R
PANIGALE					1200	2012-2013	R
PANIGALE ABS					1200	2012-2014	R
PANIGALE R					1200	2014	R
PANIGALE S					1200	2012-2013	R
PANIGALE S ABS					1200	2012-2014	R
PANIGALE S TRICOLORE					1200	2012-2013	R
RF7525	265	83,5	6	4	102	10	-
DUCATI							
DIAVEL					1200	2011-2013	R
DIAVEL AMG					1200	2013	R
DIAVEL CARBON					1200	2011-2012	R
DIAVEL STRADA					1200	2014	R
RF7526	220	102	4	5	120	8,5	-
APRILIA							
TUONO					50	2003-2007	R
RS					125	1998-2011	R
TUONO					125	2003-2007	R

CODICE P/N	Ø Esterno Ø Outer	Ø Interno Ø Inner	Spessore Tickness	Nr fori No. holes	Interasse fori Bolt pattern	Ø Fori Ø Holes	Campanatura Total height
RF7527	272	140	5	6	158	8,5	-
APRILIA							
ETV Capo Nord					1000	2001-2007	R
RF7528	220	102,5	5	5	120	8,5	-
APRILIA							
RSV4 FACTORY					1000	2009-2011	R
RSV4 FACTORY APRC					1000	2011-2012	R
RSV4 R					1000	2009-2012	R
TUONO V4 R					1000	2011-2013	R
TUONO V4 R APRC					1000	2011-2013	R
TUONO V4 R APRC ABS					1000	2014	R
RF7529	240	70,4	5	6	101,7	8	-
BUELL							
XB9R FIREBOLT					984	2002-2006	R
XB9S LIGHTNING					984	2002-2006	R
XB9SX CityX					984	2005-2009	R
1125 CR					1125	2008-2009	R
1125 R					1125	2008-2009	R
XB12R FIREBOLT					1200	2004-2009	R
XB12S LIGHTNING					1200	2003-2008	R
XB12SS / SCG					1200	2009	R
XB12SS LIGHTNING LONG					1200	2005-2006	R
XB12X ULYSSES					1200	2005-2007	R
XBRR					1340	2006	R
RF7530	220	87,5	5	4	105	10,5	-
CAGIVA							
RAPTOR					650	2001-2007	R
RAPTOR					1000	2000-2006	R
V-RAPTOR					1000	2000-2006	R
XTRA-RAPTOR					1000	2002-2004	R
RF7531	240	116,5	5	4	135	10,5	-
HONDA							
CBF					500	2004-2008	R
CB F HORNET					600	2007-2013	R
CB F HORNET ABS					600	2007-2013	R
CBF					600	2004-2007	R
CBF N					600	2003-2007	R
CBF S ABS					600	2003-2007	R
CBR F					600	2011-2013	R
CBR F ABS					600	2011-2013	R
CBF					1000	2006-2011	R
CBF ABS					1000	2006-2012	R
CBF ST ABS					1000	2006-2012	R
RF7532	256	70	5	4	110	8,5	-
HONDA							
CB 1000 R					1000	2008-2013	R
CB 1000 R - ABS					1000	2009-2014	R

DISKS / DISCHI

I codici che terminano in D indicano sempre il disco Wave®
The codes that finish in D indicate always disc Wave®

FL > disco anteriore sinistro / front left disk
FR > disco anteriore destro / front right disk
R > disco posteriore / rear disk

CODICE P/N	Ø Esterno Ø Outer	Ø Interno Ø Inner	Spessore Tickness	Nr fori No. holes	Interasse fori Bolt pattern	Ø Fori Ø Holes	Campanatura Total height
RF7533	256	145	5	6	166	10,5	-
HONDA							
XLV VARADERO					1000	2003-2011	R
XLV VARADERO ABS					1000	2004-2011	R
CBR XX					1100	1997-2007	R
X ELEVEN					1100	2000-2003	R
CB					1284	2003-2008	R
RF7534	276	171	6	5	190	10,5	-
HONDA							
CROSSTOURER					1200	2012-2013	R
VFR F					1200	2010-2014	R
VFR F DCT					1200	2010-2014	R
RF7535	240	120,5	6	5	141	10,5	-
SUZUKI							
GSR					400	2006-2008	R
GSR					600	2006-2010	R
GLADIUS					650	2009-2014	R
GLADIUS ABS					650	2009-2014	R
GSF BANDIT					650	2007-2012	R
GSF BANDIT ABS					650	2011-2014	R
GSX F					650	2008-2012	R
GSX F ABS					650	2008-2014	R
GSR					750	2011-2014	R
GSR ABS					750	2011-2014	R
GSF BANDIT					1200	2006	R
GSF BANDIT					1250	2007-2011	R
GSF BANDIT S					1250	2011-2012	R
GSX FA					1250	2010-2014	R
RF7536	260	141	5	4	162	10,5	-
KAWASAKI							
KLV					1000	2004-2007	R
DL V-STROM					650	2004-2012	R
DL V-STROM ABS					650	2007-2012	R
DL V-STROM					1000	2002-2010	R
DL V-STROM ABS					1000	2014	R
RF7537	260	140	5	6	161	10,5	-
SUZUKI							
B-KING					1300	2008-2010	R
GSX R HAYABUSA					1300	2008-2012	R
RF7538	260	105,5	5	5	126	10,5	-
SUZUKI							
GSX					1400	2002-2007	R

CODICE P/N	Ø Esterno Ø Outer	Ø Interno Ø Inner	Spessore Tickness	Nr fori No. holes	Interasse fori Bolt pattern	Ø Fori Ø Holes	Campanatura Total height
RF7539	255	105	5	4	125	10,5	-
TRIUMPH							
BONNEVILLE					800	2001-2006	R
BONNEVILLE					865	2007-2013	R
BONNEVILLE SE					865	2009-2011	R
BONNEVILLE- T100					865	2005-2013	R
SCRAMBLER					865	2006-2013	R
THRUXTON					865	2004-2014	R
SPRINT RS					955	2000-2004	R
SPRINT ST					955	1998-2004	R
SPEED TRIPLE					1050	2011-2013	R
SPRINT ST T1050					1050	2005-2011	R
TIGER					1050	2007-2011	R
TIGER ABS					1050	2007-2013	R
RF7540	230	102	4	5	120	8,5	-
YAMAHA							
YZF R					125	2008-2013	R
RF7541	245	115,5	5	6	133	8,5	-
YAMAHA							
XT R					660	2004-2014	R
XT X					660	2004-2014	R
XTZ TENERE					660	2008-2013	R
RF7542	267	132	5	5	150	8,5	-
YAMAHA							
FAZER 8					800	2010-2012	R
FZ8					800	2010-2013	R
RF7543	260	102	5	5	120	8,5	-
APRILIA							
MANA					850	2007-2011	R
MANA GT					850	2009-2013	R
RF7544	240	107,5	5	5	130	8,5	-
KTM							
DUKE					690	2008-2014	R
DUKE R					690	2010-2011	R
SUPERMOTO					950	2005-2007	R
SUPERMOTO R					950	2006-2008	R
SM T					990	2009-2013	R
SUPER DUKE					990	2005-2011	R
SUPER DUKE R					990	2007-2013	R
SUPERMOTO					990	2007-2012	R
SUPERMOTO R					990	2010-2012	R
RF7545	240	110	5	6	125	6,5	-
KTM							
LC8 ADVENTURE ABS					990	2009-2012	R

CODICE P/N	Ø Esterno Ø Outer	Ø Interno Ø Inner	Spessore Tickness	Nr fori No. holes	Interasse fori Bolt pattern	Ø Fori Ø Holes	Campanatura Total height
RF7546	240	118	5	5	136	10,5	-
HONDA							
INTEGRA					700	2012-2013	R
NC S					700	2012-2013	R
NC S ABS					700	2012-2013	R
NC X					700	2012-2013	R
NC X ABS					700	2012-2013	R
NC S DCT					750	2014	R
NC X					750	2014	R
NC X DCT					750	2014	R
RF7547	276	136,5	5	5	160	10,5	-
BMW							
R 1200 GS					1200	2013-2014	R
R 1200 GS - ABS					1200	2013-2014	R
RF7548	240	102,5	5	5	120	8,5	-
APRILIA							
CAPONORD					1200	2013-2014	R
DORSODURO					1200	2011-2013	R
DORSODURO ABS					1200	2011-2012	R
PIAGGIO							
BEVERLY					300	2011-2013	R
RF7549	245	132	5	5	150	10,5	-
YAMAHA							
MT-09					850	2014	R
MT-09 ABS					850	2014	R
RF8114	240	105,5	4	4	125	10,5	-
HONDA							
PANTHEON					125	1998-2007	FL
SH i					125	2009-2014	FL
SH SPORTY					125	2011	FR
SILVER WING					125	2007-2011	FL
SILVER WING ABS					125	2007-2011	FL
PANTHEON					150	1998-2007	FL
SH i					150	2009-2014	FL
SH SPORTY					150	2011	FR
FORESIGHT					250	2001-2007	FL
FORZA					250	2000-2007	FL
JAZZ					250	2001-2004	FL
PEUGEOT							
SV					250	2002-2007	FL
RF8115	267	132	4	6	150	8,5	-
YAMAHA							
XP T-MAX					500	2008-2011	FL/FR
XP T-MAX ABS					500	2008-2011	FL/FR

CODICE P/N	Ø Esterno Ø Outer	Ø Interno Ø Inner	Spessore Tickness	Nr fori No. holes	Interasse fori Bolt pattern	Ø Fori Ø Holes	Campanatura Total height
RF8116	267	132	4	5	150	9	-
YAMAHA							
X-MAX YP R					125	2006-2013	FR
X-MAX YP R					125	2014	FL
X-MAX YP R ABS					125	2011-2014	FR
X-MAX YP R					250	2005-2014	FR
X-MAX YP R ABS					250	2011-2014	FR
X-MAX YP R SPORT					250	2011-2012	FR
YP G GRAND MAJESTY [japan]					250	2004-2005	FL
X-MAX YP					400	2013-2014	FL/FR
X-MAX YP ABS					400	2014	FL/FR
YP MAJESTY					400	2004	FL
YP MAJESTY					400	2005-2013	FL/FR
XP T-MAX					500	2004-2007	FL/FR
XP T-MAX					530	2012-2014	FL/FR
XP T-MAX ABS					530	2012-2014	FL/FR
RF8117	260	88	4	5	110	10,5	-
KYMCO							
AGILITY 2T R16 (Rear Drum Model)					50	2008-2014	FL
AGILITY 4T R16 (Rear Drum Model)					50	2008-2014	FL
AGILITY R16					125	2008-2014	FL
AGILITY R16 PLUS					125	2014	FL
PEOPLE S (Rear Drum Model)					125	2005-2006	FL
PEOPLE S DD					125	2007-2014	FL
PEOPLE S DD					125	2007-2014	R
AGILITY R16					150	2008-2012	FL
AGILITY R16					200	2009-2014	FL
AGILITY R16i PLUS					200	2014	FL
PEOPLE S					200	2007-2014	FL
PEOPLE S					200	2007-2014	R
PEOPLE S (Rear Drum Model)					200	2005-2006	FL
PEOPLE S					250	2006-2009	FL/FR
PEOPLE S					250	2006-2009	R
PEOPLE S					300	2008-2010	FL/FR
PEOPLE S					300	2008-2010	R
RF8118	256	144	4,5	6	166	10,5	-
HONDA							
SH i					300	2010-2014	FL
SH i ABS					300	2010-2014	FL
SH i BLAUER HT Limited Edition					300	2014	FL
RF8119	220	105	4	6	120	6,5	-
GILERA							
RUNNER VXR 4t					200	2006	R
RUNNER VXR 4t (Grimeca)					200	2002-2005	R
RUNNER VXR 4t (Hengtong)					200	2002-2005	R
PIAGGIO							
LIBERTY (GRIMECA CALIPER) (2T)					50	1997-2010	FL
LIBERTY (heng tong caliper) (2T)					50	1997-2011	FL
LIBERTY 2T SPORT					50	2007-2008	FL
LIBERTY 4T (grimeca caliper)					50	2000-2009	FL
LIBERTY 4T (heng tong caliper)					50	2000-2009	FL
LIBERTY 4T DELIVERY TNT					50	2009	FL
LIBERTY 4T SPORT					50	2007-2008	FL
NRG POWER DD					50	2005-2013	FL
NRG POWER DT					50	2005-2011	FL
NRG POWER PUREJET					50	2004-2011	FL
NRG PUREJET					50	2004-2010	FL
NRG SILVER BULLETT					50	2010	FL
VESPA LXV					50	2007-2009	FL
LIBERTY (Rear Drum Model)					125	1997-2002	FL
LIBERTY 4T (Rear Drum Model)					125	2007-2008	FL

I codici che terminano in D indicano sempre il disco Wave®
The codes that finish in D indicate always disc Wave®

FL > disco anteriore sinistro / front left disk
FR > disco anteriore destro / front right disk
R > disco posteriore / rear disk

CODICE P/N	Ø Esterno Ø Outer	Ø Interno Ø Inner	Spessore Tickness	Nr fori No. holes	Interasse fori Bolt pattern	Ø Fori Ø Holes	Campanatura Total height
RF8119	220	105	4	6	120	6,5	-
LIBERTY 4T DELIVERY (Rear Drum Model)					125	2008-2009	FL
LIBERTY 4T SPORT (Rear Drum Model)					125	2006-2008	FL
VESPA GRANTURISMO (Grimeca caliper)					125	2003-2006	FL
VESPA GRANTURISMO (Grimeca caliper)					125	2003-2006	R
VESPA GRANTURISMO (Heng Tong caliper)					125	2003-2007	FL
VESPA GRANTURISMO (Heng Tong caliper)					125	2003-2007	R
VESPA GTS					125	2007-2011	FL
VESPA GTS					125	2007-2011	R
VESPA GTS 4T SUPER					125	2009-2013	FL
VESPA GTS 4T SUPER					125	2009-2013	R
VESPA GTV 4T NAVY					125	2008	FL
VESPA LXV					125	2007-2012	FL
LIBERTY 4t					150	2008	FL
LIBERTY 4T SPORT					150	2008	FL
LIBERTY 4t					200	2005-2008	FL
LIBERTY 4T SPORT					200	2006-2008	FL
VESPA GT L GRANTURISMO (Grimeca cal.)					200	2003-2006	FL
VESPA GT L GRANTURISMO (Grimeca cal.)					200	2003-2006	R
VESPA GT L GRANTURISMO (Heng Tong cal.)					200	2003-2006	FL
VESPA GT L GRANTURISMO (Heng Tong cal.)					200	2003-2006	R
VESPA GT 60					250	2006-2007	FL
VESPA GT 60					250	2006-2007	R
VESPA GTS					250	2005-2013	FL
VESPA GTS					250	2005-2013	R
VESPA GTS ABS					250	2005-2012	FL
VESPA GTS ABS					250	2005-2012	R
VESPA GTV					250	2006-2009	FL
VESPA GTV					250	2006-2009	R
VESPA GTV 4T NAVY					250	2008	FL
VESPA GTV 4T NAVY					250	2008	R
VESPA GTS IE					300	2012-2014	FL
VESPA GTS IE					300	2012-2014	R
VESPA GTS IE TOURING					300	2011	FL
VESPA GTS IE TOURING					300	2011	R
VESPA GTS SUPER					300	2008-2013	FL
VESPA GTS SUPER					300	2008-2013	R
VESPA GTS SUPER SPORT					300	2010-2013	FL
VESPA GTS SUPER SPORT					300	2010-2013	R
VESPA GTV					300	2010-2013	FL
VESPA GTV					300	2010-2013	R
RF8120	260	58	4	5	80	10,5	-
KYMCO							
DOWNTOWN i					125	2009-2014	FR
K-XCT					125	2012-2014	FR
SUPER DINK					125	2009-2013	FR
DOWNTOWN i					200	2010-2014	FR
DOWNTOWN i					300	2009-2014	FR
DOWNTOWN i ABS					300	2010-2014	FR
SUPER DINK					300	2009-2012	FR
RF8121	220	89	4	3	110	10,5	-
SUZUKI							
SIXTEEN					125	2008-2011	FR
SIXTEEN					125	2008-2011	R
SIXTEEN					150	2008-2011	FR
SIXTEEN					150	2008-2011	R
RF8122	270	129	5	6	146	8,5	-
YAMAHA							
X-CITY					125	2008-2013	FL
X-CITY					250	2008-2014	FL

CODICE P/N	Ø Esterno Ø Outer	Ø Interno Ø Inner	Spessore Tickness	Nr fori No. holes	Interasse fori Bolt pattern	Ø Fori Ø Holes	Campanatura Total height
RF8123	220	100	4	3	120	8,5	-
SUZUKI							
BURGMAN					125	2002-2006	FL
BURGMAN					150	2002-2006	FL
RF8124	240	89	4,5	3	110	10,5	-
SUZUKI							
BURGMAN					125	2007-2013	FR
BURGMAN					125	2007-2013	R
BURGMAN					200	2007-2013	FR
BURGMAN					200	2007-2013	R
RF8125	220	100	4	5	120	11	-
SUZUKI							
UC EPICURO					125	1999-2003	FL
UC EPICURO					150	1999-2001	FL
RF8126	240	105	4	5	120	6,5	-
APRILIA							
ATLANTIC					125	2003-2011	FL
SCARABEO					125	2004-2007	R
ATLANTIC					200	2003-2004	FL
ATLANTIC					250	2005-2006	FL
ATLANTIC					300	2010-2011	FR
BENELLI							
VELVET					250	1999-2003	FL
VELVET					400	2003-2004	FL
RF8127	240	105	4	6	120	6,5	-
GILERA							
RUNNER					125	2008	FL
RUNNER VXR 4t					125	2005-2007	FL
RUNNER VXR 4t					200	2005-2008	FL
FUOCO					500	2007-2014	FL/FR
PIAGGIO							
MP3					125	2007-2008	FL/FR
MP3 IBRIDO					125	2009-2010	FL/FR
MP3 IE					125	2008-2009	FL/FR
MP3					250	2006-2008	FL/FR
MP3 LT					250	2009	FL/FR
MP3 MIC					250	2008-2009	FL/FR
MP3 IE LT					300	2010-2011	FL/FR
MP3 IE MIC					300	2010	FL/FR
MP3 LT					300	2010-2011	FL/FR
MP3 LT IBRIDO					300	2010-2013	FL/FR
MP3 MIC					300	2010	FL/FR
MP3					400	2007-2008	FL/FR
MP3 IE LT					400	2008-2010	FL/FR
MP3 IE LT SPORT					400	2008-2010	FL/FR
MP3 LT					400	2008-2010	FL/FR
MP3 LT SPORT					400	2008-2010	FL/FR
MP3 MIC					400	2008-2009	FL/FR

CODICE P/N	Ø Esterno Ø Outer	Ø Interno Ø Inner	Spessore Tickness	Nr fori No. holes	Interasse fori Bolt pattern	Ø Fori Ø Holes	Campanatura Total height
RF8128	260	101	5	5	120	8,5	-
PEUGEOT							
GEO RS					125	2008	FL
SATELIS					125	2004-2008	FL
SATELIS ABS					125	2004-2008	FL
GEO RS					250	2008	FL
GEOPOLIS					250	2006-2009	FL
GEOPOLIS					300	2013	FL
GEO RS					400	2008	FL
GEOPOLIS					400	2008-2009	FL
GEOPOLIS					500	2008-2012	FL
RF8129	226	58	3,5	3	80	10,5	-
KYMCO							
PEOPLE					50	1999-2011	FL
PEOPLE (Rear Drum Model)					125	1999-2014	FL
PEOPLE					150	1999-2004	FL
RF8130	276	144	6	6	166	10,5	-
HONDA							
SW-T					400	2009-2014	FL
SW-T ABS					400	2009-2014	FL
SW-T ABS					600	2011-2014	FL
RF8131	200	58,5	4	3	80	10,5	-
KYMCO							
AGILITY CARRY (Rear Drum Model)					50	2011-2013	FL
AGILITY RS (Rear Drum Model)					50	2009-2012	FL
AGILITY RS (Rear Drum Model)					125	2009-2012	FL
RF8132	220	89,5	4	5	110	10,5	-
KYMCO							
LIKE 2T (Rear Drum Model)					50	2009-2014	FL
LIKE 4T (Rear Drum Model)					50	2009-2014	FL
LIKE					125	2009-2012	FL
LIKE LX					125	2012	FL
LIKE					200	2009-2014	FL
RF8133	220	105	4	5	120	6,5	-
BENELLI							
VELVET					125	1999-2004	FL
VELVET					150	1999-2004	FL
RF8134	220	58	4	4	78	10,5	-
HONDA							
NSC R (Rear Drum Model)					50	2012-2014	FL
VISION 14 WHEEL (Rear Drum Model)					50	2012-2014	FL
VISION 16 WHEEL (Rear Drum Model)					50	2012-2014	FL
VISION 14 WHEEL (Rear Drum Model)					110	2012-2013	FL
VISION 16 WHEEL (Rear Drum Model)					110	2012-2013	FL
PCX (Rear Drum Model)					125	2009-2013	FL
SH MODE (Rear Drum Model)					125	2014	FL
PCX (Rear Drum Model)					150	2013	FL

CODICE P/N	Ø Esterno Ø Outer	Ø Interno Ø Inner	Spessore Tickness	Nr fori No. holes	Interasse fori Bolt pattern	Ø Fori Ø Holes	Campanatura Total height
RF8135	245	115,5	4	6	133	8,5	-
MBK							
SKYLINER					250	2000-2003	FR
SKYLINER ABS					250	2003	FR
YAMAHA							
YP MAJESTY (Rear Drum Model)					250	1996-1997	FR
YP MAJESTY DX					250	1998-1999	FR
YP MAJESTY DX/ABS					250	1999-2005	FR
RF8136	270	129	5	5	146	8,5	-
MBK							
KILIBRE					300	2003-2004	FR
YAMAHA							
XC					300	2004-2006	FR
XC VERSITY					300	2003	FR
RF8137	260	121	4,5	4	142	10,5	-
SUZUKI							
BURGMAN (4 fori / holes)					650	2002-2005	FL/FR
RF8138	240	98,5	4	5	125	10,5	-
SYM							
JOYMAX					250	2003-2009	FL
RF8139	260	125,2	5	5	140	6,5	-
APRILIA							
SR MAX					125	2011-2014	FL
SR MAX					300	2011-2014	FL
RF8140	270	152	5	5	174	10,5	-
BMW							
C 600 SPORT					600	2012-2014	FL/FR
C 600 SPORT					600	2012-2014	R
C 650 GT					650	2012-2014	FL/FR
C 650 GT					650	2012-2014	R
RF8141	267	115	4	5	133	8,5	-
YAMAHA							
XENTER (Rear Drum Model)					125	2012-2014	FL
XENTER (Rear Drum Model)					150	2012-2013	FL
RF8142	226	59	4	5	90	10,5	-
PEUGEOT							
TWEET					125	2012-2013	FL
TWEET					125	2012-2013	R
TWEET RS					125	2010-2013	FL
TWEET RS					125	2010-2013	R
TWEET RS					150	2010-2013	FL
TWEET RS					150	2010-2013	R

I codici che terminano in D indicano sempre il disco Wave®
The codes that finish in D indicate always disc Wave®

FL > disco anteriore sinistro / front left disk
FR > disco anteriore destro / front right disk
R > disco posteriore / rear disk

CODICE P/N	Ø Esterno Ø Outer	Ø Interno Ø Inner	Spessore Tickness	Nr fori No. holes	Interasse fori Bolt pattern	Ø Fori Ø Holes	Campanatura Total height
RF8502	240	92,5	5	4	114	8,5	-
YAMAHA							
X-MAX YP R					125	2006-2013	R
X-CITY					250	2008-2014	R
X-MAX YP R					250	2005-2013	R
X-MAX YP R SPORT					250	2011-2012	R
RF8503	267	132,5	5	6	150	8,5	-
YAMAHA							
XP T-MAX					500	2001-2011	R
XP T-MAX ABS					500	2008-2011	R
RF8505	240	105,5	5	4	125	10,5	-
HONDA							
SH i					125	2009-2014	R
SH SPORTY					125	2011	R
SH i					150	2009-2014	R
SH SPORTY					150	2011	R
RF8506	250	117	5	4	138	10,5	-
SUZUKI							
BURGMAN (4 fori / holes)					650	2002-2005	R
RF8507	250	117	5	5	138	10,5	-
SUZUKI							
BURGMAN (5 fori / holes)					650	2004-2012	R
BURGMAN ABS					650	2004-2012	R
RF8508	220	64,5	4	4	86	10,5	-
SUZUKI							
BURGMAN					125	2002-2006	R
BURGMAN					150	2002-2006	R
RF8509	190	63	5	3	80	8,5	-
MBK							
SKYLINER					125	2001-2010	R
SKYLINER					150	2002	R
YAMAHA							
YP MAJESTY					125	2001-2009	R
YP MAJESTY					150	2001-2002	R
YP MAJESTY					180	2003-2006	R
RF8510	240	125,2	4	5	140	6,5	-
GILERA							
DNA (Grimeca)					50	2000-2002	FL
DNA (Hengtong)					50	2000-2005	FL
DNA (Grimeca)					125	2001-2002	R
DNA (Grimeca)					125	2001-2002	FL
DNA (Hengtong)					125	2001-2003	R
DNA (Hengtong)					125	2001-2003	FL
RUNNER FX					125	1997-2005	R
RUNNER FX SP (Grimeca)					125	2002-2005	R
RUNNER FX SP (Hengtong)					125	2002-2003	R

CODICE P/N	Ø Esterno Ø Outer	Ø Interno Ø Inner	Spessore Tickness	Nr fori No. holes	Interasse fori Bolt pattern	Ø Fori Ø Holes	Campanatura Total height
RF8510	240	125,2	4	5	140	6,5	-
RUNNER FX SP scooter					125	1999-2001	R
DNA (Grimeca)					180	2001-2003	FL
DNA (Hengtong)					180	2001-2003	FL
DNA (Hengtong)					180	2001-2003	R
RUNNER FXR 2t (Grimeca)					180	2000-2005	R
RUNNER FXR 2t (Hengtong)					180	2000	R
RUNNER FXR SP 2t (Grimeca)					180	1999-2005	R
HERCULES					200	2002	R
RUNNER SP					200	2001-2002	R
ITALJET							
DRAGSTER					125	1999-2001	R
DRAGSTER					180	1999-2001	R
PIAGGIO							
HEXAGON					125	1993-1997	FL
HEXAGON					125	1993-1997	R
LIBERTY 4T (Rear Drum Model)					125	2013	FL
X9					125	2000-2002	FL/FR
X9					125	2000-2002	R
X9 EVOLUTION (brembo caliper)					125	2003-2004	FL/FR
X9 EVOLUTION (brembo caliper)					125	2003-2004	R
X9 EVOLUTION (HENGTONG CALIPER)					125	2005-2007	FL/FR
X9 EVOLUTION (HENGTONG CALIPER)					125	2005-2007	R
X9 AMALFI					180	2000-2003	FL
X9 AMALFI					180	2000-2003	R
X9 AMALFI					180	2000-2003	FL/FR
X9					200	2002-2003	FL
X9					200	2002-2003	R
X9					200	2002-2003	FL/FR
X9 AMALFI					200	2001-2002	FL
X9 AMALFI					200	2001-2002	R
X9 AMALFI					200	2001-2002	FL/FR
X9 EVOLUTION					200	2003-2004	FL
X9 EVOLUTION					200	2003-2004	R
X9 EVOLUTION					200	2003-2004	FL/FR
X9					250	2000-2004	FL
X9					250	2000-2006	R
X9					250	2000-2006	FL/FR
X9 EVOLUTION					250	2005-2006	FL/FR
X9 EVOLUTION					250	2005-2006	R
X EVO					400	2007-2011	FL/FR
X8					400	2006-2008	FL/FR
RF8511	220	96	4	5	115	6,5	-
APRILIA							
SCARABEO					50	1994-1997	FL
LEONARDO					250	1999-2004	R
LEONARDO (Grimeca cal.)					250	1999-2004	R
LEONARDO (Grimeca cal.)					300	2005-2006	R
LEONARDO ST					300	2005-2006	R
ATLANTIC					500	2002-2005	R
SCARABEO					500	2003-2005	R
RF8512	282	132	5	5	165	10,75	-
YAMAHA							
XP T-MAX					530	2012-2014	R
XP T-MAX ABS					530	2012-2014	R
RF8513	240	105,5	6	4	125	10,5	-
HONDA							
SW-T					400	2009-2014	R
SW-T ABS					400	2009-2014	R
SW-T ABS					600	2011-2014	R

CODICE P/N	Ø Esterno Ø Outer	Ø Interno Ø Inner	Spessore Tickness	Nr fori No. holes	Interasse fori Bolt pattern	Ø Fori Ø Holes	Campanatura Total height
RF8514	200	89,5	4	5	110	10,5	-
KYMCO							
G DINK					125	2012	R
LIKE					125	2009-2012	R
LIKE LX					125	2012	R
LIKE					200	2009-2014	R
G DINK					300	2012-2013	R
RF8515	226	113	5	5	127	6,5	-
PEUGEOT							
GEOPOLIS					125	2008-2009	R
GEOPOLIS					250	2006-2009	R
GEOPOLIS					400	2008-2009	R
RF8516	220	110	5	5	131,5	10,5	-
SYM							
JOYMAX					250	2003-2009	R
RF8517	200	73	4	3	95	10,5	-
SYM							
JOYRIDE					125	2001-2002	R
JOYRIDE					150	2001-2002	R
JOYRIDE					200	2001-2009	R
JOYRIDE EVO					200	2009-2013	R
RF8518	240	128	5	5	140	6,5	-
APRILIA							
SR MAX					125	2011-2014	R
SR MAX					300	2011-2014	R
RF8519	240	128	5	5	140	6,5	-
PIAGGIO							
X10 EXECUTIVE					125	2012-2013	R
X10 EXECUTIVE					350	2012-2013	R
X10 EXECUTIVE					500	2012-2013	R
RF8520	226	128	4,5	5	140	6,5	-
PEUGEOT							
GEOPOLIS					300	2013	R
RF8521	240	129,5	6	6	141	6,5	-
PEUGEOT							
GEOPOLIS					500	2008-2012	R
RF8522	267	136	5	3	150	8,5	-
YAMAHA							
X-MAX YP					400	2013-2014	R
X-MAX YP ABS					400	2014	R

CODICE P/N	Ø Esterno Ø Outer	Ø Interno Ø Inner	Spessore Tickness	Nr fori No. holes	Interasse fori Bolt pattern	Ø Fori Ø Holes	Campanatura Total height
RF8523	240	117	5	3	132	8,5	-
YAMAHA							
X-MAX YP R					125	2014	R
X-MAX YP R					250	2014	R
RH7003	305	181	4,6	5	203,15	16,8	-
BMW							
R 850 C					850	1998-2001	FL/FR
R 850 GS					850	1998-2007	FL/FR
R 1100 GS					1100	1994-2001	FL/FR
R 1100 S					1100	1998-2000	FL/FR
R 1150 GS					1150	1999-2001	FL/FR
R 1150 GS (Brembo caliper)					1150	2002-2004	FL/FR
R 1150 GS ADVENTURE					1150	2002-2005	FL/FR
HP2					1200	2006-2009	FL
K 1200 LT					1200	1999-2000	FL/FR
K 1200 RS					1200	1997-2000	FL/FR
R 1200 C					1200	1997-2001	FL/FR
R 1200 C CLASSIC					1200	2003	FL/FR
R 1200 CL					1200	2002-2006	FL/FR
R 1200 GS					1200	2004-2014	FL/FR
R 1200 GS - ABS					1200	2004-2014	FL/FR
R 1200 GS ADVENTURE					1200	2006-2014	FL/FR
RH7004	320	181	4,6	5	203,15	16,8	-
BMW							
F 800 GT					800	2013-2014	FL/FR
F 800 R					800	2009-2014	FL/FR
F 800 S					800	2006-2010	FL/FR
F 800 ST					800	2006-2012	FL/FR
R 850 R					850	2004-2007	FL/FR
R 850 RT Integral ABS					850	2001-2004	FL/FR
R 1100 S					1100	2001-2006	FL/FR
R 1100 S BOXER CUP REPLIKA					1100	2003-2006	FL/FR
R 1150 R					1150	2001-2006	FL/FR
R 1150 R ROCKSTER					1150	2003-2006	FL/FR
R 1150 RS					1150	2001-2005	FL/FR
R 1150 RT					1150	2001-2005	FL/FR
R 1150 RT ABS					1150	2001-2005	FL/FR
HP2 Megamoto					1200	2007-2009	FL
HP2 Megamoto					1200	2010	FL/FR
HP2 SPORT					1200	2008-2011	FL/FR
K 1200 GT ABS					1200	2002-2007	FL/FR
K 1200 LT ABS					1200	2001-2009	FL/FR
K 1200 R					1200	2004-2008	FL/FR
K 1200 RS					1200	2001-2006	FL/FR
K 1200 S / ABS					1200	2004-2007	FL/FR
R 1200 R					1200	2006-2013	FL/FR
R 1200 RT					1200	2005-2013	FL/FR
R 1200 S					1200	2006-2008	FL/FR
R 1200 ST					1200	2005-2008	FL/FR
R NINE T					1200	2014	FL/FR
K 1300 GT					1300	2009-2010	FL/FR
K 1300 R - ABS					1300	2008-2014	FL/FR
K 1300 S					1300	2009-2014	FL/FR
K 1600 GT					1600	2011-2014	FL/FR
K 1600 GTL					1600	2011-2014	FL/FR
HUSQVARNA							
NUDA					900	2012-2013	FL/FR
NUDA R					900	2012-2013	FL/FR
NUDA R ABS					900	2013	FL/FR

DISKS / DISCHI

I codici che terminano in D indicano sempre il disco Wave®
The codes that finish in D indicate always disc Wave®

FL > disco anteriore sinistro / front left disk
FR > disco anteriore destro / front right disk
R > disco posteriore / rear disk

CODICE P/N	Ø Esterno Ø Outer	Ø Interno Ø Inner	Spessore Tickness	Nr fori No. holes	Interasse fori Bolt pattern	Ø Fori Ø Holes	Campanatura Total height
RH7005	320	181	5	5	100,15	13,8	-
BMW							
S 1000 R					1000	2014	FL/FR
S 1000 RR					1000	2010-2014	FL/FR
RH7006	310	165,5	5	5	194	20,5	-
HONDA							
CROSSTOURER					1200	2012-2013	FL/FR
RH8101L/R	300	145	5	5	168	13,5	-
APRILIA							
SRV					850	2012-2014	FL
SRV ABS ATC					850	2012-2014	FL
GILERA							
GP 800					800	2008-2012	FL
RH8102	300	100,5	5	6	119,5	15,3	-
PIAGGIO							
BEVERLY					300	2011-2013	FL
RH8103	278	80,5	5	5	80,1	14,1	-
PIAGGIO							
X10					350	2012-2013	FL/FR
X10 EXECUTIVE					350	2012-2013	FL/FR
X10 EXECUTIVE					500	2012-2013	FL/FR
RH8501	280	140	5	5	161	13,8	-
GILERA							
GP 800					800	2008-2012	R
RL3005	300	56	5	5	82,5	8,5	-
HARLEY D.							
FLHR/I ROAD KING					1584	2008-2010	FL/FR
FLHRC ROAD KING CLASSIC					1584	2008-2013	FL/FR
FLHT/I ELECTRA GLIDE STANDARD					1584	2008-2010	FL/FR
FLHTC ELECTRA GLIDE CLASSIC					1584	2008-2013	FL/FR
FLHTCU ELECTRA GLIDE ULTRA CLASSIC					1584	2009-2013	FL/FR
FLHX STREET GLIDE					1584	2008-2013	FL/FR
FLTR/I ROAD GLIDE					1584	2008-2009	FL/FR
FLHP ROAD KING POLICE					1690	2010-2011	FL/FR
FLHTK ELECTRA GLIDE ULTRA LIMITED					1690	2010-2013	FL/FR
FLHTP ELECTRA GLIDE POLICE					1690	2009-2011	FL/FR
FLHX STREET GLIDE					1690	2010-2013	FL/FR
FLTRU					1690	2011	FL/FR
FLTRUSE SCREAM EAGLE ROAD GLIDE					1690	2011	FL/FR
FLTRX ROAD GLIDE CUSTOM					1690	2010-2013	FL/FR
FLHTCUSE BLK ULTRA CLASSIC ELECTRA GLIDE					1800	2008-2013	FL/FR
FLHTCUSE CVO ULTRA CLASSIC ELECTRA GLIDE					1800	2009-2013	FL/FR
FLHXSE CVO STREET GLIDE					1800	2010-2011	FL/FR

CODICE P/N	Ø Esterno Ø Outer	Ø Interno Ø Inner	Spessore Tickness	Nr fori No. holes	Interasse fori Bolt pattern	Ø Fori Ø Holes	Campanatura Total height
RL3006	300	56	5	5	82,5	10,5	-
HARLEY D.							
VRSCA V-ROD					1130	2006-2008	R
VRSCAW V-ROD					1250	2008-2010	R
VRSCDX NIGHT ROD SPECIAL					1250	2007-2014	R
VRSCF V-ROD MUSCLE					1250	2008-2014	R
RL3007	300	56	6	5	82,5	10,5	-
HARLEY D.							
FLHR/I ROAD KING					1584	2008-2010	R
FLHRC ROAD KING CLASSIC					1584	2008-2013	R
FLHT/I ELECTRA GLIDE STANDARD					1584	2008-2010	R
FLHTC ELECTRA GLIDE CLASSIC					1584	2008-2013	R
FLHTCU ELECTRA GLIDE ULTRA CLASSIC					1584	2009-2013	R
FLHX STREET GLIDE					1584	2008-2013	R
FLTR/I ROAD GLIDE					1584	2008-2009	R
FLHP ROAD KING POLICE					1690	2010-2011	R
FLHTK ELECTRA GLIDE ULTRA LIMITED					1690	2010-2013	R
FLHTP ELECTRA GLIDE POLICE					1690	2009-2011	R
FLTRU					1690	2011	R
FLTRUSE SCREAM EAGLE ROAD GLIDE					1690	2011	R
FLTRX ROAD GLIDE CUSTOM					1690	2010-2013	R
FLHTCUSE BLK ULTRA CLASSIC ELECTRA GLIDE					1800	2008-2013	R
FLHTCUSE CVO ULTRA CLASSIC ELECTRA GLIDE					1800	2009-2013	R
FLHXSE CVO STREET GLIDE					1800	2010-2011	R
RL7005	305	118	5	6	134	9	-
BMW							
R 850 R					850	1994-2003	FL/FR
R 850 RT					850	1995-2001	FL/FR
K 100 RS 16V					1000	1989-1993	FL/FR
K1					1000	1989-1993	FL/FR
K 1100 LT					1100	1992-2000	FL/FR
K 1100 RS					1100	1993-1996	FL/FR
R 1100 R					1100	1995-2001	FL/FR
R 1100 RS					1100	1994-2001	FL/FR
R 1100 RT					1100	1994-2001	FL/FR
R 1100 RT ABS					1100	1994-2001	FL/FR
RL7006	300	105	5	6	120	6,5	-
BMW							
F 650					650	1994-2001	FL
F 650 CS					650	2002-2007	FR
F 650 GS					650	2001-2007	FL
F 650 GS ABS					650	2001-2007	FL
F 650 GS DAKAR					650	1999-2007	FL
F 650 ST					650	1997-2001	FL
G 650 GS					650	2009-2014	FL
G 650 GS SERTAO					650	2012-2014	FL
G 650 X CHALLENGE					650	2007-2009	FL
G 650 X COUNTRY					650	2007-2009	FL
F 650 GS					800	2008-2012	FR
F 650 GS ABS					800	2008-2011	FR
F 700 GS					800	2013-2014	FL/FR
F 800 GS					800	2009-2014	FL/FR
F 800 GS ADVENTURE					800	2013-2014	FL/FR
HUSQVARNA							
TR 650 STRADA					650	2013-2014	FL
TR 650 TERRA					650	2013-2014	FL

CODICE P/N	Ø Esterno Ø Outer	Ø Interno Ø Inner	Spessore Tickness	Nr fori No. holes	Interasse fori Bolt pattern	Ø Fori Ø Holes	Campanatura Total height
RL7007	305	83	5	5	100,5	10,5	-
TRIUMPH							
TIGER					800	2010-2014	FL/FR
TIGER ABS					800	2011-2014	FL/FR
TIGER XC					800	2010-2014	FL/FR
TIGER XC ABS					800	2010-2014	FL/FR
TIGER EXPLORER					1200	2012-2014	FL/FR
TIGER EXPLORER XC					1200	2013-2014	FL/FR
RL7008	310	144	5	6	166	8,5	-
TRIUMPH							
BONNEVILLE					800	2001-2006	FL
BONNEVILLE- T100					865	2005-2009	FL
BONNEVILLE- T100					865	2013	FL
SCRAMBLER					865	2006-2009	FL
THUNDERBIRD SPORT					900	1996-2004	FL/FR
RL7009	298	132,5	4,2	6	150	8,5	-
YAMAHA							
WR X					125	2009-2013	FL
XT R					660	2004-2014	FL
XTZ TENERE					660	2008-2013	FL/FR
RL7010	310	121,5	5	5	142	10,5	-
SUZUKI							
GSR					400	2006-2008	FL/FR
GSR					600	2006-2010	FL/FR
DL V-STROM					650	2007-2012	FL/FR
DL V-STROM ABS					650	2007-2014	FL/FR
GSF BANDIT					650	2007-2012	FL/FR
GSF BANDIT ABS					650	2011-2014	FL/FR
GSX F					650	2008-2012	FL/FR
GSX F ABS					650	2008-2014	FL/FR
GSR					750	2011-2014	FL/FR
GSR ABS					750	2011-2014	FL/FR
GSF BANDIT					1200	2006	FL/FR
GSF BANDIT					1250	2007-2011	FL/FR
GSF BANDIT S					1250	2011-2012	FL/FR
GSX FA					1250	2010-2014	FL/FR
B-KING					1300	2008-2010	FL/FR
GSX R HAYABUSA					1300	2008-2012	FL/FR
RL7011	320	150	5	5	166	10,5	-
TRIUMPH							
SPEED TRIPLE					1050	2008-2011	FL/FR
SPEED TRIPLE ABS					1050	2011	FL/FR
RL8001	267	132	5	6	150	8,5	-
YAMAHA							
XP T-MAX					500	2008-2011	FL/FR
XP T-MAX ABS					500	2008-2011	FL/FR

CODICE P/N	Ø Esterno Ø Outer	Ø Interno Ø Inner	Spessore Tickness	Nr fori No. holes	Interasse fori Bolt pattern	Ø Fori Ø Holes	Campanatura Total height
RL8002	267	132	4	5	150	9	-
YAMAHA							
X-MAX YP R					125	2006-2013	FR
X-MAX YP R					125	2014	FL
X-MAX YP R ABS					125	2011-2014	FR
X-MAX YP R					250	2005-2014	FR
X-MAX YP R ABS					250	2011-2014	FR
X-MAX YP R SPORT					250	2011-2012	FR
YP G GRAND MAJESTY [japan]					250	2004-2005	FL
X-MAX YP					400	2013-2014	FL/FR
X-MAX YP ABS					400	2014	FL/FR
YP MAJESTY					400	2004	FL
YP MAJESTY					400	2005-2013	FL/FR
YP MAJESTY ABS					400	2007-2013	FL/FR
XP T-MAX					500	2004-2007	FL/FR
XP T-MAX					530	2012-2014	FL/FR
XP T-MAX					530	2014	FL/FR
XP T-MAX ABS					530	2012-2014	FL/FR
S34001	260	101,3	3,2	6	117	6,5	-
HONDA							
CR E					125	1995-2008	FL
CR R					125	1995-2008	FL
CR E					250	1995-2008	FL
CR R					250	1995-2008	FL
CRF R					250	2004-2014	FL
CRF X					250	2004-2012	FL
CR E					500	1995-2001	FL
CR R					500	1995-2001	FL
HONDA-HM							
CRF ENDURO					230	2004-2010	FL
CRE F					250	2004-2009	FL
CRE F 250 R					250	2004-2009	FL
CRE F 250 X					250	2008-2011	FL
CRE X					250	2004-2009	FL
CRF F					250	2004-2009	FL
CRF R					250	2008-2013	FL
CRE F 300 X					300	2008-2009	FL
CRE F 450 R ENDURO					450	2004-2008	FL
CRE F 450 X					450	2004-2009	FL
CRF R					450	2004-2014	FL
CRE F 490 X					490	2007	FL
CRE F 500 X					500	2008-2009	FL
CRM F 500 X					500	2011	FL
S34002	270	101,3	3,2	6	117	6,5	-
HONDA							
CR E					125	1995-2008	FL
CR R					125	2004-2008	FL
CR E					250	1995-2008	FL
CR R					250	2004-2008	FL
CRF R					250	2004-2014	FL
CRF X					250	2004-2012	FL
CRF R					450	2002-2014	FL
CRF X					450	2004-2012	FL
CR E					500	1995-2001	FL
CR R					500	1995-2001	FL
HONDA-HM							
CRF ENDURO					230	2004-2010	FL
CRE F					250	2004-2009	FL
CRE F 250 R					250	2004-2009	FL
CRE F 250 X					250	2008-2011	FL

I codici che terminano in D indicano sempre il disco Wave®
The codes that finish in D indicate always disc Wave®

FL > disco anteriore sinistro / front left disk
FR > disco anteriore destro / front right disk

R > disco posteriore / rear disk

CODICE P/N	Ø Esterno Ø Outer	Ø Interno Ø Inner	Spessore Tickness	Nr fori No. holes	Interasse fori Bolt pattern	Ø Fori Ø Holes	Campanatura Total height
S34002	270	101,3	3,2	6	117	6,5	-
CRE X					250	2004-2009	FL
CRF F					250	2004-2009	FL
CRF R					250	2008-2013	FL
CRE F 300 X					300	2008-2009	FL
CRE F 450 R ENDURO					450	2004-2008	FL
CRE F 450 X					450	2004-2009	FL
CRF R					450	2004-2014	FL
CRE F 490 X					490	2007	FL
CRE F 500 X					500	2008-2009	FL
CRM F 500 X					500	2011	FL
S34003	260	120	3,2	4	135	6,5	-
HUSQVARNA							
WR					250	2000-2013	FL
WR					300	2009-2013	FL
WR					360	2000-2004	FL
TE					410	2000-2001	FL
TC					449	2011-2013	FL
TE					449	2011-2013	FL
TC					450	2002-2010	FL
TE					450	2002-2010	FL
TXC					480	2013	FL
TC					510	2002-2009	FL
TE					510	2002-2005	FL
TXC					510	2009-2010	FL
TE					511	2011-2013	FL
TXC					511	2011-2013	FL
TC					570	2000-2003	FL
TE E					610	2007	FL
TE					630	2010-2012	FL
S34004	270	120	3,2	4	135	6,5	-
HUSQVARNA							
CR					125	2005-2012	FL
TE					125	2010-2013	FL
WR					125	2006-2012	FL
CR					250	2000-2011	FL
TC					250	2007-2013	FL
TE					250	2004-2013	FL
TXC					250	2011	FL
WR					250	2000-2013	FL
WR					300	2009-2013	FL
TE					310	2010-2012	FL
TXC					310	2011	FL
TC					449	2011-2013	FL
TE					449	2011-2013	FL
TC					450	2007-2010	FL
TE					450	2006-2010	FL
TXC					450	2011-2012	FL
TXC					480	2013	FL
TC					510	2002-2009	FL
TE					510	2006-2010	FL
TXC					510	2009-2010	FL
TE					511	2011-2013	FL
TXC					511	2011-2013	FL
S34005	260	127,5	3,2	6	143	6,5	-
HUSABERG							
TE					125	2012-2014	FL
FE					250	2013-2014	FL
TE					250	2011-2014	FL

CODICE P/N	Ø Esterno Ø Outer	Ø Interno Ø Inner	Spessore Tickness	Nr fori No. holes	Interasse fori Bolt pattern	Ø Fori Ø Holes	Campanatura Total height
S34005	260	127,5	3,2	6	143	6,5	-
TE					300	2011-2014	FL
FE					350	2013-2014	FL
FE					390	2010-2012	FL
FE					400	2000-2003	FL
FE E					400	2001-2003	FL
FE					450	2009-2014	FL
FX					450	2010	FL
FC					470	2001-2002	FL
FC					501	1999-2003	FL
FE E					501	1999-2004	FL
FE					510	2013-2014	FL
FC					550	2001-2005	FL
FE E					550	2004-2008	FL
FE					570	2010-2012	FL
FC					600	1999-2003	FL
FE E					600	1999-2002	FL
FE E					650	2001-2008	FL
FX E					650	2001-2005	FL
HUSQVARNA							
TC					125	2014-2015	FL
TE					125	2014	FL
FC					250	2014	FL
FE					250	2014-2015	FL
TC					250	2014	FL
TE					250	2014	FL
TE					300	2014-2015	FL
FC					350	2014-2015	FL
FE					350	2014	FL
FC					450	2014-2015	FL
FE					450	2014-2015	FL
FE					510	2014	FL
KTM							
EXC					125	1998-2015	FL
EXC SIX DAYS					125	2009-2015	FL
GS					125	1993-1997	FL
MX					125	1992	FL
SX					125	1993-2015	FL
SXS					125	2000-2010	FL
SX					144	2007-2010	FL
SX					150	2008-2015	FL
EXC					200	1998-2015	FL
MXC					200	1998-2003	FL
SX					200	2003-2009	FL
XC W					200	2006-2009	FL
EXC					250	1998-2014	FL
EXC E					250	2015	FL
EXC F					250	2003-2015	FL
EXC F SIX DAYS					250	2009-2015	FL
EXC G					250	2004-2009	FL
EXC SIX DAYS					250	2009-2015	FL
GS					250	1993-1997	FL
MX					250	1992	FL
MXC					250	1998-2003	FL
SX					250	1993-2015	FL
SX F					250	2003-2015	FL
SXS					250	2003-2010	FL
SXS F					250	2006-2009	FL
XC F					250	2007-2012	FL
XC W					250	2006-2012	FL
EXC					300	1997-2014	FL
EXC E					300	2015	FL
EXC SIX DAYS					300	2009-2015	FL
GS					300	1991-1996	FL
MX					300	1991-1992	FL
MXC					300	1998-2005	FL
SX					300	1993	FL
SX					300	1997-2003	FL
XC					300	2006-2012	FL
XC W					300	2006-2012	FL
EXC F					350	2010-2015	FL
EXC F SIX DAYS					350	2011-2015	FL

CODICE P/N	Ø Esterno Ø Outer	Ø Interno Ø Inner	Spessore Tickness	Nr fori No. holes	Interasse fori Bolt pattern	Ø Fori Ø Holes	Campanatura Total height
S34005	260	127,5	3,2	6	143	6,5	-
GS					350	1993	FL
SX F					350	2011-2015	FL
EXC					380	1998-2002	FL
MXC					380	1998-2001	FL
SX					380	1998-2002	FL
EGS					400	1996-1999	FL
EXC					400	1994-2011	FL
EXC G					400	2004-2006	FL
SX					400	2000-2002	FL
XC W					400	2007-2009	FL
EXC					450	2003-2015	FL
EXC R					450	2008-2009	FL
EXC SIX DAYS					450	2009-2015	FL
MXC					450	2003-2006	FL
SX F					450	2003-2015	FL
SXS					450	2003-2010	FL
SXS F					450	2003-2010	FL
XC					450	2007-2009	FL
XC F					450	2007-2009	FL
XC G					450	2006	FL
XC W					450	2007-2009	FL
EXC					500	2011-2015	FL
EXC SIX DAYS					500	2011-2015	FL
MX					500	1992	FL
SX					500	1993-1995	FL
SX F					505	2007-2009	FL
XC F					505	2007-2009	FL
EXC					520	2000-2002	FL
MXC					520	2001-2002	FL
SX					520	2000-2002	FL
EXC					525	2003-2008	FL
MXC					525	2003-2005	FL
SX					525	2003-2006	FL
XC					525	2006-2008	FL
XC G					525	2006-2008	FL
XC W					525	2006-2008	FL
EXC					530	2010-2011	FL
EXC R					530	2008-2009	FL
EXC SIX DAYS					530	2009	FL
SXC					540	1999-2000	FL
SXS					540	2001-2006	FL
GS					600	1993	FL
LC4 ENDURO					600	1991-1992	FL
MX					600	1992	FL
LC4 SC SUPERCOMP					620	1998-2004	FL
LC4 SC SUPERCOMP					625	2002	FL
SXC					625	2003-2008	FL
S34006	270	127,5	3,2	6	143	6,5	-
HUSABERG							
TE					125	2012-2014	FL
FE					250	2013-2014	FL
TE					250	2011-2014	FL
TE					300	2011-2014	FL
FE					350	2013-2014	FL
FE					390	2010-2012	FL
FE					400	2000-2003	FL
FE E					400	2001-2003	FL
FE					450	2009-2014	FL
FX					450	2010	FL
FC					470	2001-2002	FL
FC					501	1999-2003	FL
FE E					501	1999-2004	FL
FE S					501	1999-2004	FL
FE					510	2013-2014	FL
FC					550	2001-2005	FL
FE E					550	2004-2008	FL
FE					570	2010-2012	FL

CODICE P/N	Ø Esterno Ø Outer	Ø Interno Ø Inner	Spessore Tickness	Nr fori No. holes	Interasse fori Bolt pattern	Ø Fori Ø Holes	Campanatura Total height
S34006	270	127,5	3,2	6	143	6,5	-
FC					600	1999-2003	FL
FE E					600	1999-2002	FL
FE E					650	2001-2008	FL
FX E					650	2001-2005	FL
HUSQVARNA							
TC					125	2014-2015	FL
TE					125	2014	FL
FC					250	2014	FL
FE					250	2014-2015	FL
TC					250	2014	FL
TE					250	2014	FL
TE					300	2014-2015	FL
FC					350	2014-2015	FL
FE					350	2014	FL
FC					450	2014-2015	FL
FE					450	2014-2015	FL
FE					510	2014	FL
KTM							
EXC					125	1998-2015	FL
EXC SIX DAYS					125	2009-2015	FL
GS					125	1993-1997	FL
MX					125	1992	FL
SX					125	1993-2015	FL
SXS					125	2000-2010	FL
SX					144	2007-2010	FL
SX					150	2008-2015	FL
EXC					200	1998-2015	FL
MXC					200	1998-2003	FL
SX					200	2003-2009	FL
XC W					200	2006-2009	FL
EXC					250	1998-2014	FL
EXC E					250	2015	FL
EXC F					250	2003-2015	FL
EXC F SIX DAYS					250	2009-2015	FL
EXC G					250	2004-2009	FL
EXC SIX DAYS					250	2009-2015	FL
GS					250	1993-1997	FL
MX					250	1992	FL
MXC					250	1998-2003	FL
SX					250	1993	FL
SX					250	1998-2015	FL
SX F					250	2003-2015	FL
SXS					250	2003-2010	FL
SXS F					250	2006-2009	FL
XC F					250	2007-2012	FL
XC W					250	2006-2012	FL
EXC					300	1997-2014	FL
EXC E					300	2015	FL
EXC SIX DAYS					300	2009-2015	FL
GS					300	1991-1996	FL
MX					300	1991-1992	FL
MXC					300	1998-2005	FL
SX					300	1993	FL
SX					300	1997-2003	FL
XC					300	2006-2012	FL
XC W					300	2006-2012	FL
EXC F					350	2010-2015	FL
EXC F SIX DAYS					350	2011-2015	FL
GS					350	1993	FL
SX F					350	2011-2015	FL
EXC					380	1998-2002	FL
MXC					380	1998-2001	FL
SX					380	1998-2002	FL
EGS					400	1996-1999	FL
EXC					400	1994-2011	FL
EXC G					400	2004-2006	FL
SX					400	2000-2002	FL
XC W					400	2007-2009	FL
EXC					450	2003-2015	FL
EXC R					450	2008-2009	FL

DISKS / DISCHI

I codici che terminano in D indicano sempre il disco Wave®
The codes that finish in D indicate always disc Wave®

FL > disco anteriore sinistro / front left disk
FR > disco anteriore destro / front right disk
R > disco posteriore / rear disk

CODICE P/N	Ø Esterno Ø Outer	Ø Interno Ø Inner	Spessore Tickness	Nr fori No. holes	Interasse fori Bolt pattern	Ø Fori Ø Holes	Campanatura Total height
S34006	270	127,5	3,2	6	143	6,5	-
EXC SIX DAYS					450	2009-2015	FL
MXC					450	2003-2006	FL
SX F					450	2003-2015	FL
SXS					450	2003-2010	FL
SXS F					450	2003-2010	FL
XC					450	2007-2009	FL
XC F					450	2007-2009	FL
XC G					450	2006	FL
XC W					450	2007-2009	FL
EXC					500	2011-2015	FL
EXC SIX DAYS					500	2011-2015	FL
MX					500	1992	FL
SX					500	1993-1995	FL
SX F					505	2007-2009	FL
XC F					505	2007-2009	FL
EXC					520	2000-2002	FL
MXC					520	2001-2002	FL
SX					520	2000-2002	FL
EXC					525	2003-2008	FL
MXC					525	2003-2005	FL
SX					525	2003-2006	FL
XC					525	2006-2008	FL
XC G					525	2006-2008	FL
XC W					525	2006-2008	FL
EXC					530	2010-2011	FL
EXC R					530	2008-2009	FL
EXC SIX DAYS					530	2009	FL
SXC					540	1999-2000	FL
SXS					540	2001-2006	FL
GS					600	1993	FL
LC4 ENDURO					600	1991-1992	FL
MX					600	1992	FL
LC4 SC SUPERCOMP					620	1998-2004	FL
LC4 SC SUPERCOMP					625	2002	FL
SXC					625	2003-2008	FL
S34007	270	100,5	3,2	4	116	9,5	-
KAWASAKI							
KX					125	2003-2005	FL
KX					250	2003-2005	FL
KX F					250	2004-2005	FL
SUZUKI							
RMZ					250	2004-2006	FL
S34008	270	109,5	3,2	4	126	9,5	-
KAWASAKI							
KX					125	2006-2008	FL
KX					250	2006-2008	FL
KX F					250	2006-2015	FL
KLX R					450	2007-2014	FL
KX F					450	2006-2015	FL
S34009	270	118	3,2	6	134	6,5	-
SUZUKI							
RM					125	1988-2009	FL
RM					250	1989-2012	FL
RMX S					250	1992-1998	FL
DRZ E					400	2000-2008	FL
DRZ S					400	2000-2009	FL

CODICE P/N	Ø Esterno Ø Outer	Ø Interno Ø Inner	Spessore Tickness	Nr fori No. holes	Interasse fori Bolt pattern	Ø Fori Ø Holes	Campanatura Total height
S34009	270	118	3,2	6	134	6,5	-
YAMAHA							
WR					125	1998-2007	FL
YZ					125	1998-2015	FL
WR					250	1998-2001	FL
WR					250	2003-2007	FL
WR F					250	2001-2013	FL
YZ					250	1998-2014	FL
YZ F					250	2001-2015	FL
WR F					400	1998-2000	FL
YZ F					400	1998-2000	FL
WR F					426	2001-2002	FL
YZ F					426	2000-2002	FL
WR F					450	2003-2014	FL
YZ F					450	2003-2015	FL
S34010	270	118,3	3,2	4	134	9,25	-
SUZUKI							
RMZ					250	2007-2015	FL
RMX					450	2010-2012	FL
RMZ					450	2005-2015	FL
S34011	260	120	3,2	4	135	8,5	-
BETA							
RR					250	2005-2009	FL
RR 4T ENDURO					350	2011-2012	FL
RR 4T ENDURO					400	2005-2012	FL
RR 4T ENDURO					450	2005-2012	FL
RR 4T ENDURO					498	2012	FL
RR 4T ENDURO					520	2010-2011	FL
RR 4T ENDURO					525	2005-2009	FL
S34012	260	143	3,2	6	143	6,5	-
BETA							
RR 2T ENDURO					250	2013-2014	FL
RR 2T RACING					250	2013-2014	FL
RR 2T ENDURO					300	2013-2014	FL
RR 2T RACING					300	2013-2014	FL
RR 4T ENDURO					350	2013-2014	FL
RR 4T RACING					350	2014	FL
RR 4T ENDURO					400	2013-2014	FL
RR 4T ENDURO					450	2013-2014	FL
RR 4T RACING					450	2013-2014	FL
RR 4T ENDURO					498	2013-2014	FL
RR 4T RACING					498	2013-2014	FL
S34013	260	95	3,22	4	110	6,5	-
KTM							
FREERIDE R					250	2012-2015	FL
FREERIDE					350	2012-2015	FL
FREERIDE E					350	2012-2013	FL
S38001	260	61	4	5	80	8,5	-
APRILIA							
ATLANTIC					500	2002-2005	FL/FR

CODICE P/N	Ø Esterno Ø Outer	Ø Interno Ø Inner	Spessore Tickness	Nr fori No. holes	Interasse fori Bolt pattern	Ø Fori Ø Holes	Campanatura Total height
S38003	256	145	5	6	166	10,5	-
HONDA							
SH i					300	2006-2014	FL
SH i ABS					300	2006-2014	FL
SH i BLAUER HT Limited Edition					300	2014	FL
SILVER WING					400	2006-2008	FL
SILVER WING					600	2001-2006	FL
S38004	276	144	5	6	166	10,5	-
HONDA							
SILVER WING					600	2007	FL
SILVER WING ABS					600	2003-2007	FL
S38005	240	105,5	4	4	125	10,5	-
HONDA							
PANTHEON					125	1998-2007	FL
PANTHEON					150	1998-2007	FL
FORESIGHT					250	2001-2007	FL
FORZA					250	2000-2007	FL
JAZZ					250	2001-2004	FL
PEUGEOT							
SV					250	2002-2007	FL
S38006	260	105,5	5	5	130	10,5	-
KYMCO							
XCITING					250	2004-2008	FL/FR
XCITING R					300	2009-2011	FL/FR
XCITING Ri					300	2008-2009	FL/FR
XCITING					500	2004-2009	FL/FR
XCITING R					500	2007-2011	FL/FR
S38007	260	88	4	5	110	10,5	-
KYMCO							
AGILITY 2T R16 (Rear Drum Model)					50	2008-2014	FL
AGILITY 4T R16 (Rear Drum Model)					50	2008-2014	FL
AGILITY R16					125	2008-2014	FL
AGILITY R16 PLUS					125	2014	FL
PEOPLE S (Rear Drum Model)					125	2005-2006	FL
PEOPLE S DD					125	2007-2014	FL
PEOPLE S DD					125	2007-2014	R
AGILITY R16					150	2008-2012	FL
AGILITY R16					200	2009-2014	FL
AGILITY R16i PLUS					200	2014	FL
PEOPLE S					200	2007-2014	FL
PEOPLE S					200	2007-2014	R
PEOPLE S (Rear Drum Model)					200	2005-2006	FL
PEOPLE S					250	2006-2009	R
PEOPLE S					250	2006-2009	FL/FR
PEOPLE S					300	2008-2010	R
PEOPLE S					300	2008-2010	FL/FR
S38009	260	125	4	5	140	6,5	-
GILERA							
NEXUS					125	2008-2009	FL
NEXUS					250	2006-2008	FL
NEXUS (Hengtong)					300	2008-2011	FL
NEXUS					500	2004-2011	FL/FR
NEXUS i.e. SP					500	2006-2008	FL/FR

CODICE P/N	Ø Esterno Ø Outer	Ø Interno Ø Inner	Spessore Tickness	Nr fori No. holes	Interasse fori Bolt pattern	Ø Fori Ø Holes	Campanatura Total height
S38009	260	125	4	5	140	6,5	-
PIAGGIO							
BEVERLY (grimeca caliper)					125	2002-2006	FL
BEVERLY (heng tong caliper)					125	2002-2007	FL
BEVERLY S					125	2007	FL
BEVERLY TOURER					125	2008-2010	FL
X EVO					125	2007-2012	FL
X7					125	2008-2009	FL
X7 EVO					125	2009-2010	FL
X8					125	2004-2006	FL
X8 STREET					150	2006-2008	FL
X9					180	2002-2007	FL/FR
BEVERLY (grimeca caliper)					200	2002-2006	FL
BEVERLY (heng tong caliper)					200	2002-2006	FL
X8					200	2004-2005	FL
BEVERLY					250	2004-2007	FL
BEVERLY CRUISER					250	2007-2009	FL
BEVERLY SPORT					250	2006-2008	FL
BEVERLY TOURER					250	2008-2009	FL
X EVO					250	2007-2013	FL
X7					250	2008-2009	FL
X8					250	2005-2008	FL
BEVERLY TOURER					300	2009-2010	FL
CARNABY CRUISER					300	2009-2012	FL
X7 EVO					300	2009-2011	FL
BEVERLY					400	2006-2007	FL
BEVERLY TOURER					400	2008-2010	FL/FR
BEVERLY					500	2002-2009	FL/FR
BEVERLY CRUISER					500	2007-2012	FL/FR
X9					500	2001-2002	FL/FR
X9 EVOLUTION					500	2003-2007	FL/FR
X9 EVOLUTION ABS					500	2006-2007	FL/FR
S38010	260	121	4	6	142	10,5	-
SUZUKI							
BURGMAN					250	1998-2002	FL
BURGMAN					400	1999-2002	FL
S38011	260	121	4,5	4	142	10,5	-
SUZUKI							
BURGMAN (4 fori / holes)					650	2002-2005	FL/FR
S38012	260	121,5	4	5	142	10,5	-
SUZUKI							
BURGMAN					250	2003-2006	FL
BURGMAN					400	2003-2006	FL
BURGMAN ABS					400	2011-2013	FL/FR
BURGMAN twin disk					400	2006-2012	FL/FR
BURGMAN (5 fori / holes)					650	2004-2012	FL/FR
BURGMAN ABS					650	2004-2012	FL/FR
S38014	282	132,5	4	6	150	8,5	-
YAMAHA							
XP T-MAX					500	2001-2003	FL

DISKS / DISCHI

I codici che terminano in D indicano sempre il disco Wave®
The codes that finish in D indicate always disc Wave®

FL > disco anteriore sinistro / front left disk
FR > disco anteriore destro / front right disk
R > disco posteriore / rear disk

CODICE P/N	Ø Esterno Ø Outer	Ø Interno Ø Inner	Spessore Tickness	Nr fori No. holes	Interasse fori Bolt pattern	Ø Fori Ø Holes	Campanatura Total height
S38016	267	132	4	5	150	9	-
YAMAHA							
X-MAX YP R					125	2006-2013	FR
X-MAX YP R					125	2014	FL
X-MAX YP R ABS					125	2011-2014	FR
X-MAX YP R					250	2005-2014	FR
X-MAX YP R ABS					250	2011-2014	FR
X-MAX YP R SPORT					250	2011-2012	FR
YP G GRAND MAJESTY [japan]					250	2004-2005	FL
X-MAX YP					400	2013-2014	FL/FR
X-MAX YP ABS					400	2014	FL/FR
XP T-MAX					500	2004-2007	FL/FR
S38017	267	132	4	6	150	8,5	-
YAMAHA							
XP T-MAX					500	2008-2011	FL/FR
XP T-MAX ABS					500	2008-2011	FL/FR
S38020	267	132	4	5	150	9	-
YAMAHA							
YP MAJESTY					400	2004	FL
YP MAJESTY					400	2005-2013	FL/FR
YP MAJESTY ABS					400	2007-2013	FL/FR
XP T-MAX					530	2012-2014	FL/FR
XP T-MAX ABS					530	2012-2014	FL/FR
STX01	320	64	5	6	80	8,5	10
APRILIA							
AF1 FUTURA					125	1990-1992	FR
MX					125	2004-2007	FL
RS					125	1998-2011	FR
RS Extrema					125	1992-1997	FR
RS REPLICA					125	1992-1997	FR
TUONO					125	2003-2007	FR
PEGASO FACTORY					650	2007-2009	FL
PEGASO STRADA					650	2005-2009	FL
DORSODURO					750	2008-2014	FL/FR
DORSODURO FACTORY					750	2010-2011	FL/FR
SHIVER GT					750	2009	FL/FR
SL SHIVER					750	2007-2014	FL/FR
MANA					850	2007-2011	FL/FR
MANA GT					850	2009-2013	FL/FR
RSV					1000	1998-2000	FL/FR
RSV R					1000	2000	FL/FR
RSV SP					1000	1999-2000	FL/FR
SL 1000 FALCO					1000	2000-2004	FL/FR
TUONO FIGHTER					1000	2002-2005	FL/FR
TUONO R (2 pads per caliper)					1000	2003-2009	FL/FR
TUONO V4 R					1000	2011-2013	FL/FR
TUONO V4 R APRC					1000	2011-2013	FL/FR
TUONO V4 R APRC ABS					1000	2014	FL/FR
CAPONORD					1200	2013-2014	FL/FR
DORSODURO					1200	2011-2013	FL/FR
DORSODURO ABS					1200	2011-2012	FL/FR
BENELLI							
CENTURY RACER					899	2011	FL/FR
TRE K					899	2011	FL/FR
TORNADO TRE					900	2001-2002	FL/FR
CAFE RACER					1130	2011	FL/FR
CENTURY RACER					1130	2011	FL/FR
TNT					1130	2004-2006	FL/FR
TNT R160					1130	2011	FL/FR
TRE K					1130	2011	FL/FR

CODICE P/N	Ø Esterno Ø Outer	Ø Interno Ø Inner	Spessore Tickness	Nr fori No. holes	Interasse fori Bolt pattern	Ø Fori Ø Holes	Campanatura Total height
STX01	320	64	5	6	80	8,5	10
BIMOTA							
YB7					400	1989	FL/FR
V-DUE					500	1997-2000	FL/FR
BB1 SUPERMONO					650	1996-2000	FR
TESI 1D 851					851	1990-1991	FL/FR
DB2 SR					904	1993-2000	FL/FR
DB3 MANTRA					904	1995-2000	FL/FR
DB4					904	1998-1999	FL/FR
DIECI BIPOSTO					1000	1992-1995	FL/FR
SB8K GOBERT					1000	2006	FL/FR
SB8R					1000	1997-2000	FL/FR
SB6					1100	1996-2000	FL/FR
SB6R					1100	1998-2000	FL/FR
BMW							
G 650 X Moto					650	2007-2009	FL
CAGIVA							
MITO					125	1991-1994	FR
MITO EV					125	1995-2007	FR
MITO SP525					125	2006-2010	FR
PLANET					125	1997-2007	FR
RAPTOR					125	2003-2010	FR
SUPERCITY					125	1992-2000	FR
RIVER					600	1995-1999	FR
DUCATI							
JUNIOR SS					350	1991-1993	FL
MONSTER					400	1994-1999	FL
MONSTER					400	2001-2006	FL
SS SUPERSPORT					400	1992-1997	FL
SS SUPERSPORT JUNIOR					400	1992-1997	FL/FR
MONSTER					600	1994-2002	FL
SS SUPERSPORT					600	1994-2000	FL
MONSTER					620	2002-2005	FL/FR
MONSTER single disk					620	2005-2006	FL
MULTISTRADA single disk					620	2005-2006	FL
SPORT					620	2003-2004	FL/FR
SS SUPERSPORT					620	2002-2005	FL/FR
MONSTER					696	2008-2014	FL/FR
MONSTER ABS					696	2010-2014	FL/FR
748 BIPOSTO					748	1995-2002	FL/FR
748 R					748	2000	FL/FR
748 S					748	1999-2002	FL/FR
748 SP					748	1995-1997	FL/FR
748 SPS					748	1998-1999	FL/FR
MONSTER					750	1994-2001	FL/FR
SPORT					750	2000-2002	FL
SS SUPERSPORT					750	1991-1999	FL
SS SUPERSPORT					750	2000-2002	FL/FR
MONSTER					800	2003-2004	FL/FR
SPORT					800	2003-2004	FL/FR
SS SUPERSPORT					800	2003-2005	FL/FR
851 STRADA - SP					851	1988-1991	FL/FR
888 DESMOQUATTRO					888	1993-1994	FL/FR
888 SP					888	1990-1993	FL/FR
MONSTER					900	1993-2004	FL/FR
SL 900 SUPERLIGHT					900	1991-1997	FL/FR
SPORT					900	2002	FL/FR
SS SUPERSPORT					900	1991-2002	FL/FR
916 BIPOSTO					916	1994-1998	FL/FR
916 SPS					916	1997-1998	FL/FR
MONSTER S4					916	2001-2003	FL/FR
ST4					916	1998-2004	FL/FR
ST2					944	1997-2003	FL/FR
996 BIPOSTO					996	1999-2001	FL/FR
996 S					996	2001	FL/FR
MONSTER S4R					996	2003-2006	FL/FR
ST4 S					996	2001-2005	FL/FR
ST4 S ABS					996	2003	FL/FR
998 BIPOSTO					998	2002-2003	FL/FR
998 S (two pads)					998	2002-2003	FL
GT					1000	2006-2010	FL/FR

CODICE P/N	Ø Esterno Ø Outer	Ø Interno Ø Inner	Spessore Tickness	Nr fori No. holes	Interasse fori Bolt pattern	Ø Fori Ø Holes	Campanatura Total height
STX01	320	64	5	6	80	8,5	10
GT TOURING					1000	2009	FL/FR
MONSTER					1000	2003-2005	FL/FR
MONSTER S					1000	2003-2005	FL/FR
MONSTER S2R					1000	2006-2007	FL/FR
PAUL SMART LE					1000	2006-2007	FL/FR
SPORT					1000	2006-2008	FL/FR
SPORT S					1000	2007-2009	FL/FR
SS SUPERSPORT					1000	2003-2006	FL/FR
ST3					1000	2004-2006	FL/FR
ST3 S ABS					1000	2006-2007	FL/FR
GILERA							
GFR					125	1993-1994	FL
KTM							
DUKE II					640	2003-2006	FL
DUKE					690	2012-2013	FL
LAVERDA							
GHOST					650	1996-1999	FL/FR
SPORT					650	1995-2001	FL/FR
S FORMULA					750	1998-2001	FL/FR
STRIKE					750	1998-2001	FL/FR
MORINI							
9 1/2					1200	2006-2010	FL/FR
CORSARO					1200	2005-2009	FL/FR
MOTO GUZZI							
BREVA					750	2003-2007	FL
NEVADA					750	2003-2007	FL
V7 CLASSIC					750	2008-2013	FL
V7 RACER					750	2010-2013	FL
V7 SPECIAL					750	2012-2013	FL
V7 STONE					750	2012-2013	FL
BREVA					850	2006-2008	FL/FR
GRISO					850	2006	FL/FR
NORGE T-GTL					850	2007	FL/FR
DAYTONA IE					1000	1995-2000	FL/FR
V10 CENTAURO					1000	1996-2001	FL/FR
V10 CENTAURO SPORT					1000	1998-2000	FL/FR
BREVA					1100	2005-2007	FL/FR
CALIFORNIA EV					1100	1996-2000	FL/FR
CALIFORNIA EV SPECIAL					1100	1997-2003	FL/FR
CALIFORNIA JACKAL					1100	2001-2006	FR
GRISO					1100	2005-2008	FL/FR
SPORT					1100	1996	FL/FR
V11 LE MANS					1100	2000-2005	FL/FR
V11 SPORT					1100	1997-2000	FL/FR
BREVA					1200	2008-2009	FL/FR
GRISO 8 V					1200	2007-2013	FL/FR
NORGE T-GTL					1200	2006	FL/FR
SPORT					1200	2006-2007	FL/FR
STELVIO					1200	2008-2009	FL/FR
MZ							
1000 S					1000	2001-2003	FL/FR
VOXAN							
BLACK MAGIC					995	2006	FL/FR
CAFE RACER					995	2000-2006	FL/FR
ROADSTER					995	2001-2006	FL/FR
YAMAHA							
TDR (Italian model)					125	1989-1999	FL
TZR					125	1989-1992	FR
FZX ZEAL					250	1991	FR
TDR					250	1989-1992	FR
TZR					250	1989-1992	FL/FR
SRX					400	1991	FL
SZR					660	1995-2001	FR
FZR R					750	1989-1992	FL/FR
YZF R					750	1993-1997	FL/FR
YZF SP					750	1993-1997	FL/FR
FZR EXUP					1000	1990-1993	FL/FR
FZR EXUP					1000	1993-1995	FL/FR
FZR GENESIS					1000	1987-1989	FL/FR
XJR					1200	1995-1997	FL/FR
XJR					1300	1998	FL/FR

CODICE P/N	Ø Esterno Ø Outer	Ø Interno Ø Inner	Spessore Tickness	Nr fori No. holes	Interasse fori Bolt pattern	Ø Fori Ø Holes	Campanatura Total height
STX04	296	58	5	6	74	6,5	17
HONDA							
RS GP					125	1991-2005	FR
RS R					125	1991-2005	FR
CB F HORNET					250	1996-2001	FR
RS GP					250	1990-1997	FL/FR
RS R					250	1990-1997	FL/FR
TSR					250	1999	FL/FR
CB N					400	1982-1985	FL/FR
CB N					400	1986-1988	FR
CBR F					400	1985-1987	FL/FR
CBR F2					400	1985-1987	FL/FR
VFR R					400	1989-1993	FL/FR
CBR F					600	1995-1998	FL/FR
VFR F					750	1994-1997	FL/FR
CBR RR					900	1994-1997	FL/FR
VTR F FIRESTORM					1000	1997-2007	FL/FR
VTR F SUPER HAWK					1000	1997-2007	FL/FR
STX05	296	62	5	6	78	6,5	17
HONDA							
CBR F					600	1999-2000	FL/FR
CROSSRUNNER					800	2011-2014	FL/FR
VFR V-TEC					800	1998-2010	FL/FR
CBR F					900	2003	FL/FR
CBR RR					900	1992-1993	FL/FR
XLV VARADERO					1000	1999-2010	FL/FR
XLV VARADERO					1000	2010-2011	FL/FR
GL F6C VALKYRIE					1500	1997-2003	FL/FR
GL GOLD WING					1800	2001-2014	FL/FR
STX06	310	61	5	5	81	10,5	13,5
KAWASAKI							
ZXR					400	1991-2002	FL/FR
ZXR					750	1989-1995	FL/FR
ZXR R					750	1989-1992	FL/FR
ZX9R NINJA					900	2000-2001	FL/FR
ZEPHYR					1100	1993-1998	FL/FR
ZRX					1100	1997-2000	FL/FR
ZZR					1100	1990-1992	FL/FR
ZRX					1200	2001-2006	FL/FR
ZRX R					1200	2001-2006	FL/FR
ZRX S					1200	2001-2006	FL/FR
STX08	300	61	5	5	81	10,5	13,5
KAWASAKI							
ZZR					250	1992	FR
ZXR					400	1989-1990	FL/FR
ZEPHYR					550	1993-2001	FL/FR
ELIMINATOR					600	1995-1999	FR
ZX6R NINJA					600	1995-2001	FL/FR
ZZR					600	1990-2006	FL/FR
ZX6R NINJA					636	2002	FL/FR
Z 750					750	2004-2006	FL/FR
Z 750 S					750	2005-2006	FL/FR
ZEPHYR					750	1991-1999	FL/FR
ZR7					750	1999-2003	FL/FR
ZR7S					750	2001-2003	FL/FR
GPZ R					900	1990-2003	FL/FR
GTR					1000	1994-2006	FL/FR
Z 1000					1000	2003-2006	FL/FR
GPZ					1100	1995-1998	FL/FR
ZX12R NINJA					1200	2004-2006	FL/FR

DISKS / DISCHI

I codici che terminano in D indicano sempre il disco Wave®
The codes that finish in D indicate always disc Wave®

FL > disco anteriore sinistro / front left disk
FR > disco anteriore destro / front right disk
R > disco posteriore / rear disk

CODICE P/N	Ø Esterno Ø Outer	Ø Interno Ø Inner	Spessore Tickness	Nr fori No. holes	Interasse fori Bolt pattern	Ø Fori Ø Holes	Campanatura Total height
STX09	320	61	5	5	81	10,5	13,5
KAWASAKI							
ZX7R NINJA					750	1996-2003	FL/FR
ZX7RR NINJA					750	1996-2003	FL/FR
ZXR L					750	1993-1995	FL/FR
ZXR R					750	1993-1995	FL/FR
ZX9R NINJA					900	1994-1997	FL/FR
ZX9R NINJA					900	2002-2003	FL/FR
ZZR					1100	1993-1999	FL/FR
ZX12R NINJA					1200	2000-2003	FL/FR
ZZR					1200	2002-2005	FL/FR
VN MEAN STREAK					1500	2002-2003	FL/FR
STX10	310	64	5	5	86	10,5	22,5
SUZUKI							
GSX R					750	1989-1995	FL/FR
GSX R LIMITED EDITION					750	1989-1990	FL/FR
GSX R					1100	1989-2000	FL/FR
STX11	300	64	5	5	86	10,5	19,5
SUZUKI							
RG F GAMMA					125	1992	FL
RGV GAMMA					250	1991-1996	FL/FR
GSX					750	1997-2003	FL/FR
VZ MARAUDER					800	1996-2004	FR
STX12	310	64	5	5	86	10,5	19,5
SUZUKI							
GSF BANDIT					250	1990	FL
GS					400	1989	FL
GSF BANDIT					400	1989-1992	FL
GSF BANDIT					400	1993-1996	FL/FR
GS E					500	1989-2003	FR
GS F					500	2004-2007	FR
RF					900	1994-1997	FL/FR
GSF BANDIT					1200	1996-2005	FL/FR
GSX					1200	1999-2003	FL/FR
STX13	290	64	5	5	86	10,5	19,5
SUZUKI							
GSF BANDIT					600	1995-1999	FL/FR
RF R					600	1993-1997	FL/FR
STX15	300	64	5	6	80	8,5	10
CAGIVA							
FRECCIA C12R					125	1989-1991	FR
DUCATI							
PASO 907 I.E.					904	1990-1991	FL/FR
MOTO GUZZI							
DAYTONA IE					1000	1991-1994	FL/FR
YAMAHA							
TZ COMPETITION					125	1996-1997	FR
R1-Z					250	1997	FL/FR
TZ GP					250	1996-1997	FL/FR
XJR					400	1995-2000	FL/FR
FZR					600	1989	FL/FR

CODICE P/N	Ø Esterno Ø Outer	Ø Interno Ø Inner	Spessore Tickness	Nr fori No. holes	Interasse fori Bolt pattern	Ø Fori Ø Holes	Campanatura Total height
STX15	300	64	5	6	80	8,5	10
FZR R					600	1990-1995	FL/FR
FZS FAZER					600	1998-2003	FL/FR
FZ GENESIS					750	1989-1992	FL/FR
TDM					850	1991-2001	FL/FR
TRX					850	1995-2000	FL/FR
FJ					1200	1988-1995	FL/FR
STX16	296	62	5	6	78	6,5	22,5
HONDA							
CB FOUR					400	1997	FL/FR
CB F HORNET					600	1998-1999	FL/FR
STX17	310	58	5	6	74	6,5	17
HONDA							
VFR R					750	1988-1991	FL/FR
CB					1000	1993	FL/FR
STX20	320	69	5	5	91	10,5	-
SUZUKI							
GSX R					600	1997-2003	FL/FR
GSX R					750	1996-2003	FL/FR
GSX R					1000	2001-2002	FL/FR
TL R					1000	1998-2003	FL/FR
TL S					1000	1997-2001	FL/FR
GSX R HAYABUSA					1300	1999-2007	FL/FR
GSX					1400	2002-2007	FL/FR
STX21	300	132	5	6	150	8,5	-
YAMAHA							
WR X					250	2008	FL
XJ N					600	1998-2003	FL/FR
XJ S DIVERSION					600	1998-2003	FL
YZF R THUNDERCAT					600	1996-2004	FL/FR
YZF R6					600	1999-2002	FL/FR
TDM					900	2002-2014	FL/FR
FZS FAZER					1000	2001-2005	FL/FR
YZF R THUNDERACE					1000	1996-1998	FL/FR
YZF R1					1000	1998-2003	FL/FR
BT BULLDOG					1100	2002-2006	FL/FR
XVZ VENTURE ROYALE					1200	1984-1987	FL/FR
XVZ VENTURE ROYALE					1200	1984-1987	R
FJR					1300	2001-2004	FL/FR
XJR					1300	1999-2013	FL/FR
XVS MIDNIGHT STAR					1300	2007-2011	FL/FR
XV PC ROAD STAR WARRIOR					1700	2002-2007	FL/FR
XV ROADLINER					1900	2006	FL/FR
STX29	320	78	5	6	100	10,5	-
TRIUMPH							
SPEED TRIPLE T509					900	1997-1998	FL/FR
DAYTONA T595					950	1996-1998	FL/FR
DAYTONA T955i					955	1999-2001	FL/FR
SPEED TRIPLE T955					955	1999-2001	FL/FR
SPRINT RS					955	2000-2004	FL/FR
SPRINT ST					955	1998-2004	FL/FR

CODICE P/N	Ø Esterno Ø Outer	Ø Interno Ø Inner	Spessore Tickness	Nr fori No. holes	Interasse fori Bolt pattern	Ø Fori Ø Holes	Campanatura Total height
STX30	310	62	5	6	78	6,5	21,5
HONDA							
CBR RR					900	1998-1999	FL/FR
STX33	320	132	5	6	150	8,5	-
YAMAHA							
YZF R7					750	1999-2001	FL/FR
XVS A MIDNIGHT STAR					950	2009-2013	FL/FR
FJR ABS					1300	2003-2013	FL/FR
MT01					1670	2005-2006	FL/FR
STX36	330	94	5	6	110	6,5	12,5
HONDA							
CBR RR					929	2000-2001	FL/FR
CBR RR					954	2002-2003	FL/FR
STX38	310	62	5	6	78	6,5	18,5
HONDA							
CBR XX					1100	1999-2007	FL/FR
X ELEVEN					1100	2000-2003	FL/FR
CB					1284	2001-2002	FL/FR
STX39	300	61	5	6	80	8,5	11
APRILIA							
RS REPLICA					250	1995-2003	FL/FR
CAGIVA							
RAPTOR					650	2001-2007	FL/FR
RAPTOR					1000	2000-2006	FL/FR
V-RAPTOR					1000	2000-2006	FL/FR
XTRA-RAPTOR					1000	2002-2004	FL/FR
STX40	296	94	5	6	110	6,5	12,5
HONDA							
CBR F					600	2001-2007	FL/FR
CBR F SPORT					600	2001-2002	FL/FR
CB F HORNET					900	2002-2006	FL/FR
STX41	320	94	5	6	110	6,5	12,5
HONDA							
CBR RR					1000	2006-2007	FL/FR
VTR SP1 RC51					1000	2000-2001	FL/FR
VTR SP2 RC51					1000	2002-2004	FL/FR
STX43	296	58	5	6	74	6,5	22,7
HONDA							
CB F HORNET					600	2000-2006	FL/FR
CB F HORNET S					600	2000-2004	FL/FR

CODICE P/N	Ø Esterno Ø Outer	Ø Interno Ø Inner	Spessore Tickness	Nr fori No. holes	Interasse fori Bolt pattern	Ø Fori Ø Holes	Campanatura Total height
STX46	300	132	5	5	150	8,5	-
YAMAHA							
FZ6					600	2004-2008	FL/FR
FZ6 Fazer					600	2004-2008	FL/FR
FZ6 FAZER S2					600	2007-2008	FL/FR
FZ6 S2					600	2007-2008	FL/FR
XJ6					600	2009-2011	FL/FR
XJ6 DIVERSION					600	2009-2011	FL/FR
YZF R6					600	2003-2004	FL/FR
MT03					660	2006-2011	FL/FR
MT-09					850	2014	FL/FR
MT-09 ABS					850	2014	FL/FR
STX47	310	94	5	6	110	6,5	12,5
HONDA							
CBR RR					600	2003-2014	FL/FR
CBR RR - ABS					600	2009-2014	FL/FR
CB 1000 R					1000	2008-2013	FL/FR
CB 1000 R - ABS					1000	2009-2014	FL/FR
CBR RR					1000	2004-2005	FL/FR
CB					1284	2003-2008	FL/FR
STX50	320	118	5	4	134	6,5	-
HONDA							
XR R					250	1991-2004	FL
XR R					400	1995-2005	FL
XR SUPERMOTARD					400	2000-2005	FL
XR R					600	1991-2000	FL
XR R (Rear Drum Model)					600	1983-1990	FL
XR R					650	2000-2008	FL
XR SUPERMOTARD					650	2000-2008	FL
STX61	320	78	5	5	100,5	10,5	14,5
TRIUMPH							
DAYTONA T955i					955	2002-2006	FL/FR
SPEED TRIPLE T955					955	2002-2004	FL/FR
SPRINT ST T1050					1050	2005-2011	FL/FR
STX62	320	64	5	6	80	8,5	15
DUCATI							
748 R					748	2001-2002	FL/FR
996 R					996	2001	FL/FR
998 R					998	2002-2003	FL/FR
STX66	320	72	5	5	90	8,5	15
DUCATI							
749					748	2002-2007	FL/FR
749 R					748	2004-2007	FL/FR
749 S					748	2003-2007	FL/FR
848 EVO					850	2011-2013	FL/FR
999 BIPOSTO					998	2002-2006	FL/FR
999 R					998	2002-2007	FL/FR
999 S					998	2002-2006	FL/FR
999 S					998	2007	FL
S4R Testastretta MONSTER					1000	2007-2008	FL/FR
S4RS Testastretta MONSTER					1000	2006-2008	FL/FR

DISKS / DISCHI

I codici che terminano in D indicano sempre il disco Wave®
The codes that finish in D indicate always disc Wave®

FL > disco anteriore sinistro / front left disk
FR > disco anteriore destro / front right disk
R > disco posteriore / rear disk

CODICE P/N	Ø Esterno Ø Outer	Ø Interno Ø Inner	Spessore Tickness	Nr fori No. holes	Interasse fori Bolt pattern	Ø Fori Ø Holes	Campanatura Total height
STX67	300	69	5	5	91	10,5	-
SUZUKI							
GSX R					600	2004-2005	FL/FR
GSX R					750	2004-2005	FL/FR
GSX R					1000	2003-2004	FL/FR
STX68	310	69	5	5	91	10,5	-
KAWASAKI							
KLV					1000	2004-2007	FL/FR
SUZUKI							
DL V-STROM					650	2004-2006	FL/FR
DL V-STROM					1000	2002-2010	FL/FR
SV					1000	2003-2007	FL/FR
SV S					1000	2003-2007	FL/FR
STX69	290	69	5	5	91	10,5	-
SUZUKI							
GSX F					600	2004-2006	FL/FR
GSF BANDIT					650	2005-2006	FL/FR
SV					650	2003-2010	FL/FR
SV S					650	2003-2009	FL/FR
GSX F					750	2004-2006	FL/FR
STX70	300	80,5	5	5	100	10,5	-
KAWASAKI							
ZX6R NINJA					600	2007-2014	FL/FR
ZX6RR NINJA					600	2005-2006	FL/FR
ZX6R NINJA					636	2005-2006	FL/FR
ER6F					650	2006-2014	FL/FR
ER6N					650	2006-2014	FL/FR
VERSYS					650	2007-2014	FL/FR
Z 750					750	2007-2012	FL/FR
Z 750 ABS					750	2007-2012	FL/FR
Z 750 R					750	2011-2012	FL/FR
Z 750 R - ABS					750	2011-2012	FL/FR
VERSYS					1000	2012-2014	FL/FR
Z 1000					1000	2007-2013	FL/FR
Z 1000 - ABS					1000	2007-2013	FL/FR
Z 1000 SX					1000	2011-2014	FL/FR
Z 1000 SX ABS					1000	2011-2014	FL/FR
ZX-10R					1000	2004-2007	FL/FR
STX71	320	132	5	5	150	8,5	-
YAMAHA							
FZ1					1000	2006-2014	FL/FR
FZ1 FAZER					1000	2006-2012	FL/FR
FZ1 FAZER ABS					1000	2007-2012	FL/FR
YZF R1					1000	2004-2006	FL/FR
STX73	320	64	5	6	80	8,5	10
APRILIA							
RSV					1000	2001-2003	FL/FR
RSV FACTORY					1000	2003-2007	FL/FR
RSV R					1000	2001-2008	FL/FR
RSV4 FACTORY					1000	2009-2011	FL/FR

CODICE P/N	Ø Esterno Ø Outer	Ø Interno Ø Inner	Spessore Tickness	Nr fori No. holes	Interasse fori Bolt pattern	Ø Fori Ø Holes	Campanatura Total height
STX73	320	64	5	6	80	8,5	10
RSV4 FACTORY APRC					1000	2011-2012	FL/FR
RSV4 R					1000	2009-2012	FL/FR
TUONO					1000	2002-2005	FL/FR
TUONO R (4 pads per caliper)					1000	2003-2005	FL/FR
BENELLI							
TORNADO TRE					900	2003-2006	FL/FR
TORNADO TRE RS					900	2004-2006	FL/FR
CAFE RACER					1130	2005-2007	FL/FR
TITANIUM					1130	2005-2007	FL/FR
TNT RS					1130	2005-2007	FL/FR
TORNADO					1130	2006	FL/FR
BIMOTA							
SB8K SANTAMONICA					1000	2006	FL/FR
DUCATI							
998 S (four pads)					998	2002-2003	FL/FR
KTM							
DUKE					690	2008-2011	FL
SUPERMOTO PRESTIGE					690	2007-2008	FL
STX74	320	132	5	6	150	8,5	14,25
YAMAHA							
XT X					660	2004-2014	FL
STX76	310	100	5	5	120	10,5	-
SUZUKI							
GSX R					600	2006-2007	FL/FR
GSX R					750	2006-2007	FL/FR
GSX R					1000	2005-2008	FL/FR
STX78	310	132	5	5	150	8,5	-
YAMAHA							
YZF R6					600	2005-2014	FL/FR
FAZER 8					800	2010-2012	FL/FR
FZ8					800	2010-2013	FL/FR
YZF R1					1000	2007-2011	FL/FR
XT Z SUPER TENERE					1200	2010-2014	FL/FR
XT ZE SUPER TENERE					1200	2014	FL/FR
STX80	300	64,15	5	6	80	8,5	-
DUCATI							
MONSTER double disk					620	2005-2006	FL/FR
MULTISTRADA double disk					620	2005-2006	FL/FR
MONSTER					695	2006-2008	FL/FR
MONSTER S2R					800	2005-2006	FL/FR
STX83	320	78	5	5	100,5	10,5	17,5
TRIUMPH							
SPEED TRIPLE					1050	2005-2007	FL/FR
TIGER					1050	2007-2011	FL/FR
TIGER ABS					1050	2007-2013	FL/FR

CODICE P/N	Ø Esterno Ø Outer	Ø Interno Ø Inner	Spessore Tickness	Nr fori No. holes	Interasse fori Bolt pattern	Ø Fori Ø Holes	Campanatura Total height
STX90	310	80,5	5	5	100	10,5	-
KAWASAKI							
ZX6R NINJA					636	2013-2015	FL/FR
ZX6R NINJA ABS					636	2013-2015	FL/FR
Z 800					800	2013	FL/FR
Z 800 ABS					800	2013	FL/FR
Z 800e					800	2013	FL/FR
Z 800e ABS					800	2013	FL/FR
ZX-10R					1000	2008-2015	FL/FR
ZX-10R ABS					1000	2011-2015	FL/FR
GTR					1400	2007-2014	FL/FR
ZZR					1400	2006-2007	FL/FR
ZZR ABS					1400	2008-2014	FL/FR
STX93	290	121,5	5	5	142	10,5	-
SUZUKI							
GLADIUS					650	2009-2014	FL/FR
GLADIUS ABS					650	2009-2014	FL/FR
SV ABS					650	2007-2010	FL/FR
SV S ABS					650	2007-2009	FL/FR
STX94	310	84,5	5	5	100,5	10,5	-
TRIUMPH							
DAYTONA					675	2006-2012	FL/FR
DAYTONA R					675	2011	FL/FR
STREET TRIPLE					675	2007-2012	FL/FR
STREET TRIPLE R					675	2009-2012	FL/FR
STX95	330	72	5	5	90	8,5	15
DUCATI							
PANIGALE 899					898	2014	FR
STREETFIGHTER					1100	2009-2011	FL/FR
1198					1198	2009-2011	FL/FR
PANIGALE ABS					1200	2012-2014	FR
PANIGALE R					1200	2014	FR
PANIGALE S ABS					1200	2012-2014	FR
STX96	296	94	5	6	110	6,5	14,5
HONDA							
CB F HORNET					600	2007-2013	FL/FR
CB F HORNET ABS					600	2007-2013	FL/FR
CBR F					600	2011-2013	FL/FR
CBR F ABS					600	2011-2013	FL/FR
STX97	305	72	5	5	90	8,5	10
DUCATI							
HYPERMOTARD 796					800	2010-2012	FL/FR
HYPERMOTARD					1100	2007-2009	FL/FR
HYPERMOTARD EVO					1100	2010-2012	FL/FR
HYPERMOTARD EVO SP					1100	2010-2012	FL/FR
HYPERMOTARD S					1100	2007-2009	FL/FR
STX98	320	94	5	6	109	6,5	15,25
HONDA							
CBR RR					1000	2008-2014	FL/FR
CBR RR - ABS					1000	2009-2014	FL/FR

CODICE P/N	Ø Esterno Ø Outer	Ø Interno Ø Inner	Spessore Tickness	Nr fori No. holes	Interasse fori Bolt pattern	Ø Fori Ø Holes	Campanatura Total height
STX101	310	102	5	6	120	8,15	-
SUZUKI							
GSX R					600	2008-2014	FL/FR
GSX R					750	2008-2014	FL/FR
GSX R					1000	2009-2014	FL/FR
STX110	320	72	5	5	90	8,5	10
DUCATI							
MONSTER 796					800	2011-2014	FL/FR
MONSTER 796 ABS					800	2011-2014	FL/FR
HYPERMOTARD					820	2013-2014	FL/FR
HYPERMOTARD SP					820	2013-2014	FL/FR
HYPERSTRADA					820	2013-2014	FL/FR
MONSTER 1100					1100	2009-2010	FL/FR
MONSTER 1100 ABS					1100	2010	FL/FR
MONSTER DIESEL					1100	2013	FL/FR
MONSTER EVO					1100	2011-2012	FL/FR
MONSTER EVO ABS					1100	2011-2013	FL/FR
DIAVEL					1200	2011-2013	FL/FR
DIAVEL AMG					1200	2013	FL/FR
DIAVEL CARBON					1200	2011-2012	FL/FR
DIAVEL STRADA					1200	2014	FL/FR
MULTISTRADA					1200	2010-2012	FL/FR
MULTISTRADA ABS					1200	2010-2014	FL/FR
MULTISTRADA S ABS					1200	2010-2012	FL/FR
MULTISTRADA S ABS PIKES PEAK					1200	2012-2014	FL/FR
MULTISTRADA S GT					1200	2012-2013	FL/FR
MULTISTRADA TOURING ABS					1200	2010-2011	FL/FR
STX112	305	64	5	6	80	8,5	-
KTM							
SUPERMOTO					950	2005-2007	FL/FR
SUPERMOTO R					950	2006-2008	FL/FR
SM T					990	2009-2013	FL/FR
SUPERMOTO					990	2007-2012	FL/FR
SUPERMOTO R					990	2010-2011	FL/FR
SUPERMOTO R					990	2012	FL
STX113	320	94	5	5	110	6,5	12,5
HONDA							
VFR F					1200	2010-2014	FL/FR
VFR F DCT					1200	2010-2014	FL/FR
STX118	320	72	5	5	90	8,5	15
DUCATI							
848					850	2008-2010	FL/FR
MONSTER 1100 S					1100	2009-2010	FL/FR
MONSTER 1100 S ABS					1100	2010	FL/FR
STX120	300	124	5	6	142,5	6,5	-
KTM							
LC8 ADVENTURE ABS					990	2006-2012	FL

DISKS / DISCHI

I codici che terminano in D indicano sempre il disco Wave®
The codes that finish in D indicate always disc Wave®

FL > disco anteriore sinistro / front left disk
FR > disco anteriore destro / front right disk
R > disco posteriore / rear disk

CODICE P/N	Ø Esterno Ø Outer	Ø Interno Ø Inner	Spessore Tickness	Nr fori No. holes	Interasse fori Bolt pattern	Ø Fori Ø Holes	Campanatura Total height
STX121	300	124	5	6	142,5	6,5	-
KTM							
LC8 ADVENTURE ABS					990	2006-2012	FR
STX125	290	64	5	5	86	10,5	19,5
SUZUKI							
GSF BANDIT					600	2000-2004	FL/FR
GSX F					600	1998-2003	FL/FR
SV					650	1999-2002	FL/FR
SV S					650	1999-2002	FL/FR
GSX F					750	1998-2003	FL/FR
STX127	330	72	5	5	90	8,5	15
DUCATI							
PANIGALE 899					898	2014	FL
PANIGALE ABS					1200	2012-2014	FL
PANIGALE R					1200	2014	FL
PANIGALE S ABS					1200	2012-2014	FL
SZ01FID	250	119	3	6	134	6,5	-
SUZUKI							
RM					125	1988-2009	FL
RM					250	1989-2012	FL
RMX S					250	1992-1998	FL
DRZ E					400	2000-2008	FL
DRZ S					400	2000-2009	FL
YAMAHA							
WR					125	2001-2007	FL
YZ					125	2001-2015	FL
WR					250	2001-2007	FL
WR F					250	2001-2013	FL
YZ					250	2001-2014	FL
YZ F					250	2001-2015	FL
WR F					426	2001-2002	FL
YZ F					426	2001-2002	FL
WR F					450	2003-2014	FL
YZ F					450	2003-2015	FL
SZ01RID	220	118	4	6	134	6,5	-
SUZUKI							
RM					125	1988-1999	R
RM					250	1989-1999	R
RMX S					250	1992-1998	R
DRZ E					400	2000-2008	R
DRZ S					400	2000-2009	R
SZ02FI	242	121	4	4	142	10,5	-
SUZUKI							
TS R					125	1989	FL
TS R					200	1989	FL
DR DJEBEL					600	1989	FL
DR S					600	1985-1986	FL
DR S DAKAR					600	1985-1989	FL

CODICE P/N	Ø Esterno Ø Outer	Ø Interno Ø Inner	Spessore Tickness	Nr fori No. holes	Interasse fori Bolt pattern	Ø Fori Ø Holes	Campanatura Total height
SZ04RI	250	134	5	6	156	10,5	-
SUZUKI							
DR DJEBEL					600	1989	R
DR					650	1991-1995	R
DR DJEBEL					650	1990-1995	R
DR R					650	1990-1993	R
DR RE					650	1994-1995	R
DR RS					650	1990-1991	R
DR RSE					650	1991-1993	R
DR BIG					750	1988-1989	R
DR BIG S					800	1989-1996	R
SZ05RI	220	118	4	4	142	8,5	-
SUZUKI							
DR S					250	1990	R
DR R					350	1994-1999	R
DR S					350	1989-1993	R
DR S					350	1996-1999	R
SZ06FL	290	121	5	6	142	10,5	-
SUZUKI							
DR SE					650	1996-2009	FL
SZ08RI	240	89	5	5	110	10,5	-
KYMCO							
AGILITY R16					125	2008-2014	R
AGILITY R16 PLUS					125	2014	R
DOWNTOWN i					125	2009-2014	R
G DINK					125	2012	FR
SUPER DINK					125	2009-2013	R
AGILITY R16					150	2008-2012	R
AGILITY R16					200	2009-2014	R
AGILITY R16i PLUS					200	2014	R
DOWNTOWN i					200	2010-2014	R
DOWNTOWN i					300	2009-2014	R
DOWNTOWN i ABS					300	2010-2014	R
G DINK					300	2012-2013	FR
SUPER DINK					300	2009-2012	R
SUZUKI							
GSF BANDIT					600	1995-2004	R
GSX F					600	1998-2006	R
RF R					600	1993-1997	R
GSF BANDIT					650	2005-2006	R
SV					650	1999-2002	R
SV S					650	1999-2002	R
GSX					750	1997-2003	R
GSX F					750	1998-2006	R
GSX R					750	1985-1995	R
RF					900	1994-1997	R
GSX R					1100	1989-2000	R
GSF BANDIT					1200	1996-2005	R
GSX					1200	1999-2003	R
GSX R HAYABUSA					1300	1999-2007	R

CODICE P/N	Ø Esterno Ø Outer	Ø Interno Ø Inner	Spessore Tickness	Nr fori No. holes	Interasse fori Bolt pattern	Ø Fori Ø Holes	Campanatura Total height
SZ08RID	240	89,5	5	5	110	10,5	-
KYMCO							
AGILITY R16					125	2008-2014	R
AGILITY R16 PLUS					125	2014	R
DOWNTOWN i					125	2009-2014	R
G DINK					125	2012	FR
SUPER DINK					125	2009-2013	R
AGILITY R16					150	2008-2012	R
AGILITY R16					200	2009-2014	R
AGILITY R16i PLUS					200	2014	R
DOWNTOWN i					200	2010-2014	R
DOWNTOWN i					300	2009-2014	R
DOWNTOWN i ABS					300	2010-2014	R
G DINK					300	2012-2013	FR
SUPER DINK					300	2009-2012	R
SUZUKI							
GSF BANDIT					600	1995-2004	R
GSX F					600	1998-2006	R
RF R					600	1993-1997	R
GSF BANDIT					650	2005-2006	R
SV					650	1999-2002	R
SV S					650	1999-2002	R
GSX					750	1997-2003	R
GSX F					750	1998-2006	R
GSX R					750	1985-1995	R
RF					900	1994-1997	R
GSX R					1100	1989-2000	R
GSF BANDIT					1200	1996-2005	R
GSX					1200	1999-2003	R
GSX R HAYABUSA					1300	1999-2007	R
SZ09FI	300	121	4	6	142	10,5	-
SUZUKI							
DR					650	1991-1995	FL
XF FREEWIND					650	1997-2002	FL
DR BIG S					800	1991-1996	FL
SZ11FI	162	34	4	3	56	10,5	-
SUZUKI							
SEPIA scooter					50	1992	FL
ADDRESS AH V					100	1991	FL
GS					400	1989	R
GSF BANDIT					400	1989-1996	R
GS E					500	1989-2003	R
GS F					500	2004-2007	R
GSX F					600	1988-1997	R
GSX					750	1989-1992	R
SZ15FL	295	57	5	6	78	10,5	-
SUZUKI							
VS GL INTRUDER					600	1997-2005	FR
VS GL INTRUDER					750	1985-1986	FL
VS GL INTRUDER					800	1991-1999	FR
VS GL INTRUDER					1400	1987-2004	FR
VS GLP INTRUDER					1400	1987-2004	FR
SZ15RI	275	57	5	6	78	10,5	-
SUZUKI							
VS GL INTRUDER					1400	1987-2004	R
VS GLP INTRUDER					1400	1987-2004	R

CODICE P/N	Ø Esterno Ø Outer	Ø Interno Ø Inner	Spessore Tickness	Nr fori No. holes	Interasse fori Bolt pattern	Ø Fori Ø Holes	Campanatura Total height
SZ16FI	170	48	3,5	3	68	10,5	-
KAWASAKI							
KFX					400	2002-2006	FL/FR
SUZUKI							
LT Z					250	2004-2008	FL/FR
LT Z QUADSPORT					400	2003-2009	FL/FR
LT R QUADRACER					500	1987-1990	FL/FR
SZ16FID	170	48,5	3,5	3	68	10,5	-
KAWASAKI							
KFX					400	2002-2006	FL/FR
SUZUKI							
LT Z					250	2004-2008	FL/FR
LT Z QUADSPORT					400	2003-2009	FL/FR
LT R QUADRACER					500	1987-1990	FL/FR
SZ21RID	240	119	4	6	134	6,5	-
SUZUKI							
RM					125	2000-2005	R
RM					250	2000-2005	R
DRZ SM					400	2005-2009	R
SZ22RI	220	89	5	5	110	10,5	-
SUZUKI							
GSX R					600	1997-2014	R
SV					650	2003-2010	R
SV S					650	2003-2009	R
GSX R					750	1996-2014	R
GSX R					1000	2001-2014	R
SV					1000	2003-2007	R
SV S					1000	2003-2007	R
TL R					1000	1998-2003	R
TL S					1000	1997-2001	R
GSX R					1100	1987-1988	R
SZ22RID	220	89,5	5	5	110	10,5	-
SUZUKI							
GSX R					600	1997-2014	R
SV					650	2003-2010	R
SV S					650	2003-2009	R
GSX R					750	1996-2014	R
GSX R					1000	2001-2014	R
SV					1000	2003-2007	R
SV S					1000	2003-2007	R
TL R					1000	1998-2003	R
TL S					1000	1997-2001	R
GSX R					1100	1987-1988	R
SZ24FI	260	121	5	6	142	10,5	-
SUZUKI							
BURGMAN					250	1998-2002	FL
BURGMAN					400	1999-2002	FL

DISKS / DISCHI

I codici che terminano in D indicano sempre il disco Wave®
The codes that finish in D indicate always disc Wave®

FL > disco anteriore sinistro / front left disk
FR > disco anteriore destro / front right disk
R > disco posteriore / rear disk

CODICE P/N	Ø Esterno Ø Outer	Ø Interno Ø Inner	Spessore Tickness	Nr fori No. holes	Interasse fori Bolt pattern	Ø Fori Ø Holes	Campanatura Total height
SZ24RI	210	109	5	5	132	10,5	-
SUZUKI							
BURGMAN					250	1998-2002	R
BURGMAN					400	1999-2000	R
BURGMAN					400	2001-2002	R
SZ24RID	210	109	5	5	132	10,5	-
SUZUKI							
BURGMAN					250	1998-2002	R
BURGMAN					400	1999-2002	R
SZ26FID	200	100,5	3,5	3	120	6,5	-
SUZUKI							
RM					80	1990-2001	FL
RM					85	2002-2004	FL
SZ26RID	184	85	3,5	4	100	6,5	-
KAWASAKI							
KX					80	1993-1996	R
SUZUKI							
RM					80	1990-2001	R
RM					85	2002-2004	R
SZ27FI	162	48	3,5	3	67,5	10,5	-
SUZUKI							
LT E QUADRUNNER					230	1987-1993	FL/FR
LT S QUADSPORT					230	1985-1988	FL/FR
LT R QUADRACER					250	1985-1992	FL/FR
LT S QUADSPORT					250	1989-1990	FL/FR
SZ27RI	220	50	4	3	70	8,5	-
SUZUKI							
LT R QUADRACER					250	1985-1992	R
SZ30FID	260	121	4,5	4	142	10,5	-
SUZUKI							
BURGMAN (4 fori / holes)					650	2002-2005	FL/FR
SZ32FI	260	121,5	4,3	5	142	10,5	-
SUZUKI							
BURGMAN					250	2003-2006	FL
BURGMAN					400	2003-2006	FL
BURGMAN ABS					400	2011-2013	FL/FR
BURGMAN twin disk					400	2006-2012	FL/FR
BURGMAN (5 fori / holes)					650	2004-2012	FL/FR
BURGMAN ABS					650	2004-2012	FL/FR

CODICE P/N	Ø Esterno Ø Outer	Ø Interno Ø Inner	Spessore Tickness	Nr fori No. holes	Interasse fori Bolt pattern	Ø Fori Ø Holes	Campanatura Total height
SZ33RID	250	117	5	4	138	10,5	-
SUZUKI							
BURGMAN (4 fori / holes)					650	2002-2005	R
SZ35RID	250	117	5	5	138	10,5	-
SUZUKI							
BURGMAN (5 fori / holes)					650	2004-2012	R
BURGMAN ABS					650	2004-2012	R
SZ37FID	250	118	3	4	134	9,2	-
SUZUKI							
RMZ					250	2007-2015	FL
RMX					450	2010-2012	FL
RMZ					450	2005-2015	FL
SZ38RID	200	84,5	3	4	100	6,5	-
SUZUKI							
RM					85	2005-2011	R
SZ40RID	240	119	4	6	134	6,5	-
SUZUKI							
RM					125	2006-2009	R
RM					250	2006-2012	R
SZ41RID	240	120,5	5	5	141	10,5	-
SUZUKI							
GSR					400	2006-2008	R
GSR					600	2006-2010	R
GLADIUS					650	2009-2014	R
GLADIUS ABS					650	2009-2014	R
GSF BANDIT					650	2007-2012	R
GSF BANDIT ABS					650	2011-2014	R
GSX F					650	2008-2012	R
GSX F ABS					650	2008-2014	R
GSR					750	2011-2014	R
GSR ABS					750	2011-2014	R
GSF BANDIT					1200	2006	R
GSF BANDIT					1250	2007-2011	R
GSF BANDIT S					1250	2011-2012	R
GSX FA					1250	2010-2014	R
SZ42RI	210	89,5	5	5	110	10,5	-
SUZUKI							
BURGMAN ABS					400	2011-2013	R
BURGMAN twin disk					400	2006-2012	R
SZ42RID	210	89,5	5	5	110	10,5	-
SUZUKI							
BURGMAN ABS					400	2011-2013	R
BURGMAN twin disk					400	2006-2012	R

CODICE P/N	Ø Esterno Ø Outer	Ø Interno Ø Inner	Spessore Tickness	Nr fori No. holes	Interasse fori Bolt pattern	Ø Fori Ø Holes	Campanatura Total height
SZ43FID	160	48,5	3	3	68	10,5	-
SUZUKI							
LT R QUADRACER					450	2006-2010	FL/FR
SZ43RID	190	78,5	3,8	3	98	10,5	-
SUZUKI							
LT R QUADRACER					450	2006-2010	R
SZ44RID	240	122,2	4	4	140	10,5	-
SUZUKI							
RMZ					250	2007-2015	R
RMX					450	2010-2012	R
RMZ					450	2005-2015	R
TR03FLD	310	144	5	6	166	8,5	-
TRIUMPH							
BONNEVILLE					800	2001-2006	FL
BONNEVILLE- T100					865	2005-2009	FL
BONNEVILLE- T100					865	2013	FL
SCRAMBLER					865	2006-2009	FL
THUNDERBIRD SPORT					900	1996-2004	FL/FR
TR03RID	255	105	5	4	125	10,5	-
TRIUMPH							
BONNEVILLE					800	2001-2006	R
BONNEVILLE					865	2007-2013	R
BONNEVILLE SE					865	2009-2011	R
BONNEVILLE- T100					865	2005-2013	R
SCRAMBLER					865	2006-2013	R
THRUXTON					865	2004-2014	R
SPRINT RS					955	2000-2004	R
SPRINT ST					955	1998-2004	R
SPEED TRIPLE					1050	2011-2013	R
SPRINT ST T1050					1050	2005-2011	R
TIGER					1050	2007-2011	R
TIGER ABS					1050	2007-2013	R
WF3501	260	56,3	6	5	82,5	10,5	-
HARLEY D.							
XL 883 L SPORTSTER LOW					883	2007-2013	R
XL 883 R ROADSTER					883	2010-2011	R
XL 883 R SPORTSTER					883	2000-2003	R
XL 883 R SPORTSTER R					883	2005-2013	R
XL 1200 L SPORTSTER LOW					1200	2007-2013	R
XL 1200 SPORTSTER N NIGHTSTER					1200	2007-2013	R
XL 1200 V - SEVENTY TWO					1200	2012-2013	R
XL 1200 X - FORTY EIGHT					1200	2010-2013	R
XR					1200	2008-2010	R
XR 1200 X					1200	2010-2012	R
WF4102	240	95	3	4	110	6,2	-
HUSQVARNA							
TC 17/14					85	2014	FL
TC 19/16					85	2014	FL
KTM							
SX 19/16					85	2013-2014	FL

CODICE P/N	Ø Esterno Ø Outer	Ø Interno Ø Inner	Spessore Tickness	Nr fori No. holes	Interasse fori Bolt pattern	Ø Fori Ø Holes	Campanatura Total height
WF4103	256	102	3,5	6	117	6,5	-
HONDA							
CRF L					250	2013-2014	FL
WF4501	240	112,5	4	4	130	9,5	-
BETA							
RR					250	2005-2009	R
RR 4T ENDURO					350	2011-2012	R
RR 4T ENDURO					400	2005-2012	R
RR 4T ENDURO					450	2005-2012	R
RR 4T ENDURO					498	2012	R
RR 4T ENDURO					520	2010-2011	R
RR 4T ENDURO					525	2005-2009	R
HUSQVARNA							
CR					125	2005-2010	R
CR					125	2012	R
CR					125	2011	R
WR					125	2006-2012	R
CR					250	2005-2011	R
TC					250	2004-2013	R
TE					250	2007-2013	R
TXC					250	2011	R
TXC					310	2011	R
SMR					449	2011-2012	R
TC					449	2011-2013	R
TE					449	2011-2013	R
SMR					450	2010	R
SMR - RR					450	2006-2008	R
TC					450	2007-2010	R
TE					450	2006-2010	R
TXC					450	2011-2012	R
TXC					480	2013	R
SMR					510	2006-2010	R
TC					510	2007-2009	R
TE					510	2006-2010	R
TXC					510	2009-2010	R
SMR					511	2011-2012	R
TE					511	2011-2013	R
TXC					511	2011-2013	R
WF4504	256	144	5	4	166	10,5	-
HONDA							
XRV AFRICA TWIN					750	1990-2002	R
XLV VARADERO					1000	1999-2002	R
WF4505	220	110	4	6	125	6,5	-
CCM							
DS					644	2002-2006	R
R30					644	2002-2006	R
GAS GAS							
EC					125	1996-2011	R
EC RACING					125	2013-2014	R
MC					125	1996-2009	R
EC					200	2000-2014	R
HOBBY					200	2007	R
EC					250	1996-2010	R
EC 2T					250	2011-2014	R
EC 4T					250	2011-2014	R
EC F RACING					250	2013-2014	R
EC RACING					250	2012-2013	R
MC					250	1996-2009	R
EC					300	1996-2012	R
EC 2T					300	2013-2014	R
EC F RACING					300	2013-2014	R

I codici che terminano in D indicano sempre il disco Wave®
The codes that finish in D indicate always disc Wave®

FL > disco anteriore sinistro / front left disk
FR > disco anteriore destro / front right disk
R > disco posteriore / rear disk

CODICE P/N	Ø Esterno Ø Outer	Ø Interno Ø Inner	Spessore Tickness	Nr fori No. holes	Interasse fori Bolt pattern	Ø Fori Ø Holes	Campanatura Total height
WF4505	220	110	4	6	125	6,5	-
EC RACING					300	2012-2013	R
MC					300	1996-2009	R
EC					400	2002	R
EC					400	2006-2007	R
FSE					400	2002	R
MC					400	2002	R
MC					400	2006-2007	R
PAMPERA					400	2006-2007	R
EC					450	2003-2007	R
EC F					450	2013-2014	R
FSE					450	2003-2006	R
FSR					450	2007	R
MC					450	2003	R
MC					450	2007	R
HUSABERG							
TE					125	2012-2014	R
FE					250	2013-2014	R
TE					250	2011-2014	R
TE					300	2011-2014	R
FE					350	2013-2014	R
FE					390	2010-2012	R
FE					400	2000-2003	R
FE E					400	2001-2003	R
FE					450	2009-2014	R
FX					450	2010	R
FC					501	1999-2003	R
FE E					501	1999-2004	R
FE S					501	1999-2004	R
FE					510	2013-2014	R
FC					550	2001-2005	R
FE E					550	2004-2008	R
FE					570	2010-2012	R
FC					600	1999-2003	R
FE E					600	1999-2002	R
FE S					600	1999-2003	R
FE E					650	2001-2008	R
FX E					650	2001-2005	R
HUSQVARNA							
TC					125	2014-2015	R
TE					125	2014	R
FC					250	2014	R
FE					250	2014-2015	R
TC					250	2014	R
TE					250	2014	R
TE					300	2014-2015	R
FC					350	2014-2015	R
FE					350	2014	R
FC					450	2014-2015	R
FE					450	2014-2015	R
FE					510	2014	R
KTM							
EXC					125	1998-2015	R
EXC SIX DAYS					125	2009-2015	R
GS					125	1988-1997	R
MX					125	1988-1992	R
SX					125	1993-1997	R
SX					125	1998-2015	R
SXS					125	2000-2010	R
SX					144	2007-2010	R
SX					150	2008-2015	R
EXC					200	1998-2015	R
MXC					200	1998-2003	R
SX					200	2003-2009	R
XC W					200	2006-2009	R
EXC					250	1998-2014	R
EXC E					250	2015	R
EXC F					250	2003-2015	R
EXC F SIX DAYS					250	2009-2015	R
EXC G					250	2004-2009	R
EXC SIX DAYS					250	2009-2015	R
GS					250	1988-1997	R
MX					250	1988-1992	R
MXC					250	1998-2003	R

CODICE P/N	Ø Esterno Ø Outer	Ø Interno Ø Inner	Spessore Tickness	Nr fori No. holes	Interasse fori Bolt pattern	Ø Fori Ø Holes	Campanatura Total height
WF4505	220	110	4	6	125	6,5	-
SX					250	1993-2015	R
SX F					250	2003-2015	R
SXS					250	2003-2010	R
SXS F					250	2006-2009	R
XC F					250	2007-2012	R
XC W					250	2006-2012	R
EXC					300	1997-2014	R
EXC E					300	2015	R
EXC SIX DAYS					300	2009-2015	R
GS					300	1991-1996	R
MX					300	1991-1992	R
MXC					300	1998-2005	R
SX					300	1993	R
SX					300	1997-2003	R
XC					300	2006-2012	R
XC W					300	2006-2012	R
EXC F					350	2010-2015	R
EXC F SIX DAYS					350	2011-2015	R
GS					350	1993	R
SX F					350	2011-2015	R
EXC					380	1998-2002	R
MXC					380	1998-2001	R
SX					380	1998-2002	R
EGS					400	1996-1999	R
EXC					400	1994-1999	R
EXC					400	2000-2011	R
EXC G					400	2004-2006	R
SX					400	2000-2002	R
XC W					400	2007-2009	R
EXC					450	2003-2015	R
EXC R					450	2008-2009	R
EXC SIX DAYS					450	2009-2015	R
MXC					450	2003-2006	R
SMR					450	2004-2014	R
SX F					450	2003-2015	R
SXS					450	2003-2010	R
SXS F					450	2003-2010	R
XC					450	2007-2009	R
XC F					450	2007-2009	R
XC G					450	2006	R
XC W					450	2007-2009	R
EXC					500	2011-2015	R
EXC SIX DAYS					500	2011-2015	R
MX					500	1989-1992	R
SX					500	1993-1995	R
SX F					505	2007-2009	R
XC F					505	2007-2009	R
EXC					520	2000-2002	R
MXC					520	2001-2002	R
SX					520	2000-2002	R
EXC					525	2003-2008	R
MXC					525	2003-2005	R
SMR					525	2004-2005	R
SX					525	2003-2006	R
XC					525	2006-2008	R
XC G					525	2006-2008	R
XC W					525	2006-2008	R
EXC					530	2010-2011	R
EXC R					530	2008-2009	R
EXC SIX DAYS					530	2009	R
SXC					540	1999-2000	R
SXS					540	2001-2006	R
SMR					560	2006-2008	R
GS					600	1993	R
LC4 ENDURO					600	1991-1992	R
MX					600	1990-1992	R
LC4 SC SUPERCOMP					620	1998-2004	R
LC4 SUPERMOTO					620	1999-2001	R
LC4 SC SUPERCOMP					625	2002	R
LC4 SUPERMOTO					625	2002-2004	R
SMC					625	2005-2008	R
SXC					625	2003-2008	R
LC4 SUPERMOTO					640	1998-2007	R
SMC					660	2003-2007	R

CODICE P/N	Ø Esterno Ø Outer	Ø Interno Ø Inner	Spessore Tickness	Nr fori No. holes	Interasse fori Bolt pattern	Ø Fori Ø Holes	Campanatura Total height
WF4506	240	112,5	4	4	130	9,5	-
BETA							
RR					250	2005-2009	R
RR 4T ENDURO					350	2011-2012	R
RR 4T ENDURO					400	2005-2012	R
RR 4T ENDURO					450	2005-2012	R
RR 4T ENDURO					498	2012	R
RR 4T ENDURO					520	2010-2011	R
RR 4T ENDURO					525	2005-2009	R
HUSQVARNA							
CR					125	2005-2010	R
CR					125	2012	R
CR					125	2011	R
WR					125	2006-2012	R
CR					250	2005-2011	R
TC					250	2004-2013	R
TE					250	2007-2013	R
TXC					250	2011	R
TXC					310	2011	R
SMR					449	2011-2012	R
TC					449	2011-2013	R
TE					449	2011-2013	R
SMR					450	2010	R
SMR - RR					450	2006-2008	R
TC					450	2007-2010	R
TE					450	2006-2010	R
TXC					450	2011-2012	R
TXC					480	2013	R
SMR					510	2006-2010	R
TC					510	2007-2009	R
TE					510	2006-2010	R
TXC					510	2009-2010	R
SMR					511	2011-2012	R
TE					511	2011-2013	R
TXC					511	2011-2013	R

WF4507	245	115,5	4	6	133	6,5	-
YAMAHA							
WR					125	2002-2007	R
YZ					125	2002-2015	R
WR					250	2002-2007	R
WR F					250	2002-2013	R
YZ					250	2002-2014	R
YZ F					250	2002-2015	R
WR F					426	2002	R
YZ F					426	2002	R
WR F					450	2003-2014	R
YZ F					450	2003-2015	R

WF4508	240	122,2	4	4	140	6,5	-
HONDA							
CR E					125	2002-2008	R
CR R					125	2002-2008	R
CR E					250	2002-2008	R
CR R					250	2002-2008	R
CRF R					250	2004-2014	R
CRF X					250	2004-2012	R
CRF R					450	2002-2014	R
CRF X					450	2004-2012	R
HONDA-HM							
CR E SUPERMOTARD					125	2002-2008	R
CRF R					150	2007-2009	R
CRF ENDURO					230	2004-2010	R
CRF SUPERMOTARD					230	2004-2010	R
CR E SUPERMOTARD					250	2002-2009	R
CRE F					250	2004-2009	R

CODICE P/N	Ø Esterno Ø Outer	Ø Interno Ø Inner	Spessore Tickness	Nr fori No. holes	Interasse fori Bolt pattern	Ø Fori Ø Holes	Campanatura Total height
WF4508	240	122,2	4	4	140	6,5	-
CRE F 250 R					250	2004-2009	R
CRE F 250 X					250	2008-2011	R
CRE X					250	2004-2009	R
CRF F					250	2004-2009	R
CRF R					250	2008-2013	R
CRF R SUPERMOTARD					250	2004-2008	R
CRF X SUPERMOTARD					250	2004-2008	R
CRE F 300 X					300	2008-2009	R
CRE F 450 R ENDURO					450	2004-2008	R
CRE F 450 X					450	2004-2009	R
CRF R					450	2004-2014	R
CRF SUPERMOTARD					450	2002-2003	R
CRF X SUPERMOTARD					450	2004-2009	R
CRE F 490 X					490	2007	R
CRE F 500 X					500	2008-2009	R
CRM F 500 X					500	2011	R

WF4509	210	109	4	4	125	6,2	-
HUSQVARNA							
TC 17/14					85	2014	R
TC 19/16					85	2014	R
KTM							
SX					85	2011-2014	R
SX 19/16					85	2013-2014	R
FREERIDE R					250	2012-2015	R
FREERIDE					350	2012-2015	R
FREERIDE E					350	2012-2013	R

WF4510	220	112,5	4,1	4	130	9,5	-
HUSQVARNA							
WR					250	2005-2013	R
WR					300	2009-2013	R
WR					360	2000-2004	R
TE					410	2000-2001	R
SMR					570	2000-2004	R
TC					570	2000-2003	R
TE					570	2001-2004	R
SMR					630	2004-2005	R

WF7101	292	156	4	5	170	8,6	-
HONDA							
CB					350	1987	FL/FR
CB S					450	1985-1989	FL/FR
XL V TRANSALP					600	1997-1999	FL/FR
NX DOMINATOR					650	1988-2004	FL
NX DOMINATOR 34 HP					650	1997-2002	FL
XL V TRANSALP					650	2000-2007	FL/FR
XR L					650	1993-2012	FL
XL V TRANSALP					700	2008-2011	FL/FR
XL V TRANSALP ABS					700	2008-2011	FL/FR
YAMAHA							
YZF R					125	2008-2013	FL

WF7103	280	61,5	4	6	80	10,5	-
KTM							
DUKE					125	2011-2013	FL
DUKE					200	2012-2013	FL

DISKS / DISCHI

I codici che terminano in D indicano sempre il disco Wave®
The codes that finish in D indicate always disc Wave®

FL > disco anteriore sinistro / front left disk
FR > disco anteriore destro / front right disk
R > disco posteriore / rear disk

CODICE P/N	Ø Esterno Ø Outer	Ø Interno Ø Inner	Spessore Tickness	Nr fori No. holes	Interasse fori Bolt pattern	Ø Fori Ø Holes	Campanatura Total height
WF7104	290	130	5	5	150	10,5	-
KAWASAKI							
NINJA 300					300	2013-2014	FR
NINJA 300 ABS					300	2013-2014	FR
WF7105	320	211	5	6	230	10,5	-
HONDA							
CB F					500	2013-2014	FR
CB X					500	2013-2014	FR
CBR R					500	2013-2014	FR
WF7106	320	211	5	5	230	10,5	-
HONDA							
INTEGRA					700	2012-2013	FR
NC S					700	2012-2013	FR
NC S ABS					700	2012-2013	FR
NC X					700	2012-2013	FR
NC X ABS					700	2012-2013	FR
NC S DCT					750	2014	FR
NC X					750	2014	FR
NC X DCT					750	2014	FR
WF7107	300	61	5	6	74	10,5	-
KTM							
DUKE					125	2014	FL
DUKE					200	2014	FL
DUKE					390	2013-2014	FL
WF7108	276	144	4	5	166	10,5	-
HONDA							
CBR R					125	2012-2014	FR
CBF (Rear Drum Model)					250	2004-2008	FL
WF7109	300	91	4	6	102	6,5	-
APRILIA							
RS4 (AJP Rear Caliper)					50	2011-2014	FL
RS4 (J.Juan Rear Caliper)					50	2011-2014	FL
RS4 (AJP Rear Caliper)					125	2011-2013	FL
RS4 (J.Juan Rear Caliper)					125	2011-2014	FL
WF7501	260	140	5	6	161	10,5	-
SUZUKI							
B-KING					1300	2008-2010	R
GSX R HAYABUSA					1300	2008-2012	R
WF7502	256	70	5	4	110	8,5	-
HONDA							
CB 1000 R					1000	2008-2013	R
CB 1000 R - ABS					1000	2009-2014	R

CODICE P/N	Ø Esterno Ø Outer	Ø Interno Ø Inner	Spessore Tickness	Nr fori No. holes	Interasse fori Bolt pattern	Ø Fori Ø Holes	Campanatura Total height
WF7503	220	100	4	3	120	10,5	-
KAWASAKI							
NINJA 250 R					250	2008-2012	R
WF7504	220	88,9	5	5	108	9,6	-
KTM							
RC8					1190	2008-2011	R
RC8 R					1190	2010-2012	R
WF7506	256	56,3	5	5	82,5	10,5	-
HARLEY D.							
XL 883 L SPORTSTER LOW					883	2007-2013	R
XL 883 R ROADSTER					883	2010-2011	R
XL 883 R SPORTSTER					883	2000-2003	R
XL 883 R SPORTSTER R					883	2005-2013	R
XL 1200 L SPORTSTER LOW					1200	2007-2013	R
XL 1200 SPORTSTER N NIGHTSTER					1200	2007-2013	R
XL 1200 V - SEVENTY TWO					1200	2012-2013	R
XL 1200 X - FORTY EIGHT					1200	2010-2013	R
XR					1200	2008-2010	R
XR 1200 X					1200	2010-2012	R
WF7507	292	56,3	5	5	82,5	10,5	-
HARLEY D.							
XL 883 SPORTSTER CUSTOM					883	2004-2010	R
XL SPORTSTER CUSTOM 53					883	2000-2003	R
XLH 883 SPORTSTER					883	2000-2006	R
XLH 883 SPORTSTER HUGGER					883	2000-2003	R
VRSCA V-ROD					1130	2002-2005	R
XL 1200 C SPORTSTER CUSTOM					1200	2004-2013	R
XL 1200 R SPORTSTER ROADSTER					1200	2004-2008	R
XL 1200 S SPORT					1200	2000-2003	R
XL 1200 SPORTSTER - FORTY EIGHT					1200	2010-2011	R
XLH 1200 SPORTSTER					1200	2000-2003	R
FLSTC 1340 HERITAGE SOFTAIL CLASSIC					1340	2000-2002	R
FLSTC FAT BOY					1340	2000-2002	R
FLHR/I ROAD KING					1450	2000-2007	R
FLHRCI ROAD KING CLASSIC					1450	2000-2006	R
FLHT/I ELECTRA GLIDE STANDARD					1450	2000-2006	R
FLHTCUI ELECTRA GLIDE ULTRA CLASSIC					1450	2000-2006	R
FLSTC HERITAGE SOFTAIL CLASSIC					1450	2000-2006	R
FLSTF FAT BOY					1450	2000-2006	R
FLSTS HERITAGE SPRINGER					1450	2000-2003	R
FLTR/I ROAD GLIDE					1450	2000-2007	R
FXD DYNA SUPER GLIDE					1450	2000-2003	R
FXD DYNA SUPER GLIDE					1450	2006-2007	R
FXDC DYNA SUPER GLIDE CUSTOM					1450	2006-2007	R
FXDL DYNA LOW RIDER					1450	2000-2006	R
FXDWG DYNA WIDE GLIDE					1450	2000-2007	R
FXDX DYNA SUPER GLIDE T-SPORT					1450	2000-2005	R
FXST SOFTAIL STANDARD					1450	2000-2007	R
FXSTB/I NIGHT TRAIN					1450	2000-2007	R
FXSTD/I SOFTAIL DEUCE					1450	2000-2006	R
FXSTS/I SPRINGER SOFTAIL					1450	2000-2006	R
FLHRC ROAD KING CLASSIC					1584	2007	R
FLHT/I ELECTRA GLIDE STANDARD					1584	2007	R
FLHTCU ELECTRA GLIDE ULTRA CLASSIC					1584	2007-2008	R
FLHX STREET GLIDE					1584	2006-2007	R
FLSTB FAT BOY SPECIAL					1584	2010-2013	R
FLSTB SOFTAIL CROSS BONES					1584	2008-2011	R
FLSTC HERITAGE SOFTAIL CLASSIC					1584	2007-2014	R
FLSTF FAT BOY					1584	2007-2014	R

CODICE P/N	Ø Esterno Ø Outer	Ø Interno Ø Inner	Spessore Tickness	Nr fori No. holes	Interasse fori Bolt pattern	Ø Fori Ø Holes	Campanatura Total height
WF7507	292	56,3	5	5	82,5	10,5	-
FLSTN SOFTAIL DELUXE					1584	2005-2014	R
FLSTSE CVO SOFTAIL CONVERTIBLE					1584	2010-2011	R
FXCW ROCKER					1584	2008-2009	R
FXCWC ROCKER C					1584	2008-2013	R
FXD DYNA SUPER GLIDE					1584	2008-2010	R
FXDC DYNA SUPER GLIDE CUSTOM					1584	2008-2014	R
FXDF FAT BOB					1584	2008-2014	R
FXDL DYNA LOW RIDER					1584	2007-2010	R
FXDWG DYNA WIDE GLIDE					1584	2008-2014	R
FXS BLACKLINE					1584	2011-2013	R
FXSTB NIGHT TRAIN					1584	2008-2010	R
FXSTC SOFTAIL CUSTOM					1584	2008-2010	FL
FXSTC SOFTAIL CUSTOM					1584	2008-2010	R
FXSTSS CVO SOFTAIL SPRINGER					1584	2009	R
FLD SWITCHBACK					1690	2012-2014	R
FLS SOFTAIL SLIM					1690	2012-2014	R
WF7508	220	119	5	5	135,6	6,6	-
BMW							
HP4					1000	2013-2014	R
S 1000 R					1000	2014	R
S 1000 RR					1000	2010-2014	R
WF7509	230	102	4	5	120	8,5	-
YAMAHA							
YZF R					125	2008-2013	R
WF7510	282	132,5	5	6	150	8,5	-
YAMAHA							
XT Z SUPER TENERE					1200	2010-2014	R
XT ZE SUPER TENERE					1200	2014	R
WF7511	267	132	5	5	150	8,5	-
YAMAHA							
FAZER 8					800	2010-2012	R
FZ8					800	2010-2013	R
WF7512	220	102,5	5	5	120	8,5	-
APRILIA							
RSV4 FACTORY					1000	2009-2011	R
RSV4 FACTORY APRC					1000	2011-2012	R
RSV4 R					1000	2009-2012	R
TUONO V4 R					1000	2011-2013	R
TUONO V4 R APRC					1000	2011-2013	R
TUONO V4 R APRC ABS					1000	2014	R
WF7513	276	171	6	5	190	10,5	-
HONDA							
CROSSTOURER					1200	2012-2013	R
VFR F					1200	2010-2014	R
VFR F DCT					1200	2010-2014	R

CODICE P/N	Ø Esterno Ø Outer	Ø Interno Ø Inner	Spessore Tickness	Nr fori No. holes	Interasse fori Bolt pattern	Ø Fori Ø Holes	Campanatura Total height
WF7514	230	104	4	6	124	10,5	-
KTM							
DUKE					125	2011-2014	R
DUKE					200	2012-2014	R
DUKE					390	2013-2014	R
WF7515	255	106	6	4	124,5	10,5	-
TRIUMPH							
TIGER					800	2010-2014	R
TIGER ABS					800	2011-2014	R
TIGER XC					800	2010-2014	R
TIGER XC ABS					800	2010-2014	R
SPEED TRIPLE ABS					1050	2011	R
SPEED TRIPLE R					1050	2012-2014	R
SPEED TRIPLE R ABS					1050	2012-2014	R
SPRINT GT ABS					1050	2010-2014	R
WF7516	245	83,5	5	4	102	8,5	-
DUCATI							
MONSTER					1200	2014	R
MULTISTRADA					1200	2010-2012	R
MULTISTRADA ABS					1200	2010-2014	R
MULTISTRADA S ABS					1200	2010-2012	R
MULTISTRADA S ABS PIKES PEAK					1200	2012-2014	R
MULTISTRADA S GT					1200	2012-2013	R
MULTISTRADA S SPORT					1200	2011-2012	R
MULTISTRADA S TOURING					1200	2010-2014	R
PANIGALE					1200	2012-2013	R
PANIGALE ABS					1200	2012-2014	R
PANIGALE R					1200	2014	R
PANIGALE S					1200	2012-2013	R
PANIGALE S ABS					1200	2012-2014	R
PANIGALE S TRICOLORE					1200	2012-2013	R
WF7517	265	83,5	6	4	102	10	-
DUCATI							
DIAVEL					1200	2011-2013	R
DIAVEL AMG					1200	2013	R
DIAVEL CARBON					1200	2011-2012	R
DIAVEL STRADA					1200	2014	R
WF7518	220	108	5	4	125	8,5	-
MV AGUSTA							
BRUTALE					675	2012-2014	R
F3					675	2012-2014	R
F3 SERIE ORO					675	2012-2013	R
BRUTALE					800	2013-2014	R
F3					800	2014	R
RIVALE					800	2013-2014	R
WF7519	220	85	4	4	100	10,5	-
TRIUMPH							
STREET TRIPLE					675	2013-2014	R
STREET TRIPLE R					675	2013-2014	R

I codici che terminano in D indicano sempre il disco Wave®
The codes that finish in D indicate always disc Wave®

FL > disco anteriore sinistro / front left disk
FR > disco anteriore destro / front right disk
R > disco posteriore / rear disk

CODICE P/N	Ø Esterno Ø Outer	Ø Interno Ø Inner	Spessore Tickness	Nr fori No. holes	Interasse fori Bolt pattern	Ø Fori Ø Holes	Campanatura Total height
WF7520	240	110	5	6	125	6,5	-
KTM							
LC8 ADVENTURE ABS					990	2009-2012	R
WF7521	240	102,5	5	5	120	8,5	-
APRILIA							
CAPONORD					1200	2013-2014	R
DORSODURO					1200	2011-2013	R
DORSODURO ABS					1200	2011-2012	R
PIAGGIO							
BEVERLY					300	2011-2013	R
WF7522	220	105,5	5	4	125	10,5	-
HONDA							
CBR R ABS					250	2011-2013	R
CBR R ABS					300	2014	R
WF7523	240	118	5	4	136	10,5	-
HONDA							
CB F					500	2013-2014	R
CB X					500	2013-2014	R
CBR R					500	2013-2014	R
WF7524	240	118	5	5	136	10,5	-
HONDA							
INTEGRA					700	2012-2013	R
NC S					700	2012-2013	R
NC S ABS					700	2012-2013	R
NC X					700	2012-2013	R
NC X ABS					700	2012-2013	R
NC S DCT					750	2014	R
NC X					750	2014	R
NC X DCT					750	2014	R
WF7525	276	136,5	5	5	160	10,5	-
BMW							
R 1200 GS					1200	2013-2014	R
R 1200 GS - ABS					1200	2013-2014	R
WF7526	245	132	5	5	150	10,5	-
YAMAHA							
MT-09					850	2014	R
MT-09 ABS					850	2014	R
WF7527	218	58	3,5	6	80	6,5	-
APRILIA							
RS4 (AJP Rear Caliper)					50	2011-2014	R
RS4 (J.Juan Rear Caliper)					50	2011-2014	R
RS4 (AJP Rear Caliper)					125	2011-2013	R
RS4 (J.Juan Rear Caliper)					125	2011-2014	R

CODICE P/N	Ø Esterno Ø Outer	Ø Interno Ø Inner	Spessore Tickness	Nr fori No. holes	Interasse fori Bolt pattern	Ø Fori Ø Holes	Campanatura Total height
WF8101	240	98,5	4	5	125	10,5	-
SYM							
JOYMAX					250	2003-2009	FL
WF8102	273	173	4	5	250,5	10,5	-
SYM							
EURO MX					125	2002-2004	FL
JOYRIDE					125	2001-2009	FL
JOYRIDE EVO					125	2009-2013	FL
SHARK					125	1999-2002	FL
VS					125	2006-2008	FL
DURO MX					150	2002-2004	FL
JOYRIDE					150	2001-2002	FL
SHARK					150	2000-2001	FL
VS					150	2007-2008	FL
JOYRIDE					200	2001-2009	FL
JOYRIDE EVO					200	2009-2013	FL
WF8103	220	105	4	6	120	6,5	-
GILERA							
RUNNER VXR 4t					200	2006	R
RUNNER VXR 4t (Grimeca)					200	2002-2005	R
RUNNER VXR 4t (Hengtong)					200	2002-2005	R
PIAGGIO							
LIBERTY (GRIMECA CALIPER) (2T)					50	1997-2010	FL
LIBERTY (heng tong caliper) (2T)					50	1997-2011	FL
LIBERTY 2T SPORT					50	2007-2008	FL
LIBERTY 4T (grimeca caliper)					50	2000-2009	FL
LIBERTY 4T (heng tong caliper)					50	2000-2009	FL
LIBERTY 4T DELIVERY TNT					50	2009	FL
LIBERTY 4T SPORT					50	2007-2008	FL
NRG POWER DD					50	2005-2013	FL
NRG POWER DT					50	2005-2011	FL
NRG POWER PUREJET					50	2004-2011	FL
NRG PUREJET					50	2004-2010	FL
NRG SILVER BULLETT					50	2010	FL
VESPA LXV					50	2007-2009	FL
LIBERTY (Rear Drum Model)					125	1997-2002	FL
LIBERTY 4T (Rear Drum Model)					125	2007-2008	FL
LIBERTY 4T DELIVERY (Rear Drum Model)					125	2008-2009	FL
LIBERTY 4T SPORT (Rear Drum Model)					125	2006-2008	FL
VESPA GRANTURISMO (Grimeca caliper)					125	2003-2006	FL
VESPA GRANTURISMO (Grimeca caliper)					125	2003-2006	R
VESPA GRANTURISMO (Heng Tong caliper)					125	2003-2007	FL
VESPA GRANTURISMO (Heng Tong caliper)					125	2003-2007	R
VESPA GTS					125	2007-2011	FL
VESPA GTS					125	2007-2011	R
VESPA GTS 4T SUPER					125	2009-2013	FL
VESPA GTS 4T SUPER					125	2009-2013	R
VESPA GTV 4T NAVY					125	2008	FL
VESPA LXV					125	2007-2012	FL
LIBERTY 4t					150	2008	FL
LIBERTY 4T SPORT					150	2008	FL
LIBERTY 4t					200	2005-2008	FL
LIBERTY 4T SPORT					200	2006-2008	FL
VESPA GT L GRANTURISMO (Grimeca cal.)					200	2003-2006	FL
VESPA GT L GRANTURISMO (Grimeca cal.)					200	2003-2006	R
VESPA GT L GRANTURISMO (Heng Tong cal.)					200	2003-2006	FL
VESPA GT L GRANTURISMO (Heng Tong cal.)					200	2003-2006	R
VESPA GT 60					250	2006-2007	FL
VESPA GT 60					250	2006-2007	R
VESPA GTS					250	2005-2013	FL
VESPA GTS					250	2005-2013	R
VESPA GTS ABS					250	2005-2012	FL
VESPA GTS ABS					250	2005-2012	R
VESPA GTV					250	2006-2009	FL
VESPA GTV					250	2006-2009	R

CODICE P/N	Ø Esterno Ø Outer	Ø Interno Ø Inner	Spessore Tickness	Nr fori No. holes	Interasse fori Bolt pattern	Ø Fori Ø Holes	Campanatura Total height
WF8103	220	105	4	6	120	6,5	-
VESPA GTV 4T NAVY					250	2008	FL
VESPA GTV 4T NAVY					250	2008	R
VESPA GTS IE					300	2012-2014	FL
VESPA GTS IE					300	2012-2014	R
VESPA GTS IE TOURING					300	2011	FL
VESPA GTS IE TOURING					300	2011	R
VESPA GTS SUPER					300	2008-2013	FL
VESPA GTS SUPER					300	2008-2013	R
VESPA GTS SUPER SPORT					300	2010-2013	FL
VESPA GTS SUPER SPORT					300	2010-2013	R
VESPA GTV					300	2010-2013	FL
VESPA GTV					300	2010-2013	R
WF8104	220	89	4	3	110	10,5	-
SUZUKI							
SIXTEEN					125	2008-2011	FR
SIXTEEN					125	2008-2011	R
SIXTEEN					150	2008-2011	FR
SIXTEEN					150	2008-2011	R
WF8105	270	129	5	6	146	8,5	-
YAMAHA							
X-CITY					125	2008-2013	FL
X-CITY					250	2008-2014	FL
WF8106	240	105	4	6	120	6,5	-
GILERA							
RUNNER					125	2008	FL
RUNNER VXR 4t					125	2005-2007	FL
RUNNER VXR 4t					200	2005-2008	FL
FUOCO					500	2007-2014	FL/FR
PIAGGIO							
MP3					125	2007-2008	FL/FR
MP3 IBRIDO					125	2009-2010	FL/FR
MP3 IE					125	2008-2009	FL/FR
MP3					250	2006-2008	FL/FR
MP3 LT					250	2009	FL/FR
MP3 MIC					250	2008-2009	FL/FR
MP3 IE LT					300	2010-2011	FL/FR
MP3 IE MIC					300	2010	FL/FR
MP3 LT					300	2010-2011	FL/FR
MP3 LT IBRIDO					300	2010-2013	FL/FR
MP3 MIC					300	2010	FL/FR
MP3					400	2007-2008	FL/FR
MP3 IE LT					400	2008-2010	FL/FR
MP3 IE LT SPORT					400	2008-2010	FL/FR
MP3 LT					400	2008-2010	FL/FR
MP3 LT SPORT					400	2008-2010	FL/FR
MP3 MIC					400	2008-2009	FL/FR
WF8111	220	58	4	4	78	10,5	-
HONDA							
NSC R (Rear Drum Model)					50	2012-2014	FL
VISION 14 WHEEL (Rear Drum Model)					50	2012-2014	FL
VISION 16 WHEEL (Rear Drum Model)					50	2012-2014	FL
VISION 14 WHEEL (Rear Drum Model)					110	2012-2013	FL
VISION 16 WHEEL (Rear Drum Model)					110	2012-2013	FL
PCX (Rear Drum Model)					125	2009-2013	FL
SH MODE (Rear Drum Model)					125	2014	FL
PCX (Rear Drum Model)					150	2013	FL

CODICE P/N	Ø Esterno Ø Outer	Ø Interno Ø Inner	Spessore Tickness	Nr fori No. holes	Interasse fori Bolt pattern	Ø Fori Ø Holes	Campanatura Total height
WF8112	220	89,5	4	5	110	10,5	-
KYMCO							
LIKE 2T (Rear Drum Model)					50	2009-2014	FL
LIKE 4T (Rear Drum Model)					50	2009-2014	FL
LIKE					125	2009-2012	FL
LIKE LX					125	2012	FL
LIKE					200	2009-2014	FL
WF8113	270	152	5	5	174	10,5	-
BMW							
C 600 SPORT					600	2012-2014	FL/FR
C 600 SPORT					600	2012-2014	R
C 650 GT					650	2012-2014	R
C 650 GT					650	2012-2014	FL/FR
WF8114	220	58	4	4	78	10,5	-
HONDA							
MSX (GROM)					125	2013-2014	FR
WF8115	267	115	4	5	133	8,5	-
YAMAHA							
XENTER (Rear Drum Model)					125	2012-2014	FL
XENTER (Rear Drum Model)					150	2012-2013	FL
WF8116	226	59	4	5	90	10,5	-
PEUGEOT							
TWEET					125	2012-2013	R
TWEET					125	2012-2013	FL
TWEET RS					125	2010-2013	FL
TWEET RS					125	2010-2013	R
TWEET RS					150	2010-2013	R
TWEET RS					150	2010-2013	FL
WF8117	276	144	6	6	166	10,5	-
HONDA							
SW-T					400	2009-2014	FL
SW-T ABS					400	2009-2014	FL
SW-T ABS					600	2011-2014	FL
WF8118	263	101	5	5	120	8,5	-
PEUGEOT							
GEO RS					125	2008	FL
SATELIS					125	2004-2008	FL
SATELIS ABS					125	2004-2008	FL
GEO RS					250	2008	FL
GEOPOLIS					250	2006-2009	FL
GEOPOLIS					300	2013	FL
GEO RS					400	2008	FL
GEOPOLIS					400	2008-2009	FL
GEOPOLIS					500	2008-2012	FL

DISKS / DISCHI

I codici che terminano in D indicano sempre il disco Wave®
The codes that finish in D indicate always disc Wave®

FL > disco anteriore sinistro / front left disk
FR > disco anteriore destro / front right disk
R > disco posteriore / rear disk

CODICE P/N	Ø Esterno Ø Outer	Ø Interno Ø Inner	Spessore Tickness	Nr fori No. holes	Interasse fori Bolt pattern	Ø Fori Ø Holes	Campanatura Total height
WF8501	267	132,5	5	6	150	8,5	-
YAMAHA							
XP T-MAX					500	2001-2011	R
XP T-MAX ABS					500	2008-2011	R
WF8502	220	110	5	5	131,5	10,5	-
SYM							
JOYMAX					250	2003-2009	R
WF8503	200	73	4	3	95	10,5	-
SYM							
JOYRIDE					125	2001-2002	R
JOYRIDE					150	2001-2002	R
JOYRIDE					200	2001-2009	R
JOYRIDE EVO					200	2009-2013	R
WF8504	226	113	5	5	127	6,5	-
PEUGEOT							
GEOPOLIS					125	2008-2009	R
GEOPOLIS					250	2006-2009	R
GEOPOLIS					400	2008-2009	R
WF8505	282	132	5	5	165	10,75	-
YAMAHA							
XP T-MAX					530	2012-2014	R
XP T-MAX ABS					530	2012-2014	R
WF8506	240	105,5	6	4	125	10,5	-
HONDA							
SW-T					400	2009-2014	R
SW-T ABS					400	2009-2014	R
SW-T ABS					600	2011-2014	R
WF8507	200	89,5	4	5	110	10,55	-
KYMCO							
G DINK					125	2012	R
LIKE					125	2009-2012	R
LIKE LX					125	2012	R
LIKE					200	2009-2014	R
G DINK					300	2012-2013	R
WF8508	226	128	4,5	5	140	6,5	-
PEUGEOT							
GEOPOLIS					300	2013	R
WF8509	240	129,5	6	5	141	6,5	-
PEUGEOT							
GEOPOLIS					500	2008-2012	R

CODICE P/N	Ø Esterno Ø Outer	Ø Interno Ø Inner	Spessore Tickness	Nr fori No. holes	Interasse fori Bolt pattern	Ø Fori Ø Holes	Campanatura Total height
WF8510	190	58	4	4	78	10,5	-
HONDA							
MSX (GROM)					125	2013-2014	R
WF8511	275	127,5	5	5	150	10,5	-
SYM							
MAXSYM					400	2011-2014	FL/FR
MAXSYM					400	2011-2014	R
MAXSYM ABS					400	2012-2014	FL/FR
MAXSYM ABS					400	2012-2014	R
WF8512	240	117	5	3	132	6,5	-
YAMAHA							
X-MAX YP R					125	2014	R
X-MAX YP R					250	2014	R
WF9101	163	51	3,5	4	72	10,5	-
KAWASAKI							
KFX R					450	2008-2014	FL/FR
WF9501	200	70	3,5	4	90	10,5	-
KAWASAKI							
KFX R					450	2008-2014	R
WH7003	305	181	4,6	5	203,15	13,8	-
BMW							
R 850 C					850	1998-2001	FL/FR
R 850 GS					850	1998-2007	FL/FR
R 1100 GS					1100	1994-2001	FL/FR
R 1100 S					1100	1998-2000	FL/FR
R 1150 GS					1150	1999-2001	FL/FR
R 1150 GS (Brembo caliper)					1150	2002-2004	FL/FR
R 1150 GS ADVENTURE					1150	2002-2005	FL/FR
HP2					1200	2006-2009	FL
K 1200 LT					1200	1999-2000	FL/FR
K 1200 RS					1200	1997-2000	FL/FR
R 1200 C					1200	1997-2001	FL/FR
R 1200 C CLASSIC					1200	2003	FL/FR
R 1200 CL					1200	2002-2006	FL/FR
R 1200 GS					1200	2004-2014	FL/FR
R 1200 GS - ABS					1200	2004-2014	FL/FR
R 1200 GS ADVENTURE					1200	2006-2014	FL/FR
WH7004	320	181	4,6	5	203,15	13,8	-
BMW							
F 800 GT					800	2013-2014	FL/FR
F 800 R					800	2009-2014	FL/FR
F 800 S					800	2006-2010	FL/FR
F 800 ST					800	2006-2012	FL/FR
R 850 R					850	2004-2007	FL/FR
R 850 RT Integral ABS					850	2001-2004	FL/FR
R 1100 S					1100	2001-2006	FL/FR
R 1100 S BOXER CUP REPLIKA					1100	2003-2006	FL/FR
R 1150 R					1150	2001-2006	FL/FR

CODICE P/N	Ø Esterno Ø Outer	Ø Interno Ø Inner	Spessore Tickness	Nr fori No. holes	Interasse fori Bolt pattern	Ø Fori Ø Holes	Campanatura Total height
WH7004	320	181	4,6	5	203,15	13,8	-
R 1150 R ROCKSTER					1150	2003-2006	FL/FR
R 1150 RS					1150	2001-2005	FL/FR
R 1150 RT					1150	2001-2005	FL/FR
R 1150 RT ABS					1150	2001-2005	FL/FR
HP2 Megamoto					1200	2007-2009	FL
HP2 Megamoto					1200	2010	FL/FR
HP2 SPORT					1200	2008-2011	FL/FR
K 1200 GT ABS					1200	2002-2007	FL/FR
K 1200 LT ABS					1200	2001-2009	FL/FR
K 1200 R					1200	2004-2008	FL/FR
K 1200 RS					1200	2001-2006	FL/FR
K 1200 S / ABS					1200	2004-2007	FL/FR
R 1200 R					1200	2006-2013	FL/FR
R 1200 RT					1200	2005-2013	FL/FR
R 1200 S					1200	2006-2008	FL/FR
R 1200 ST					1200	2005-2008	FL/FR
R NINE T					1200	2014	FL/FR
K 1300 GT					1300	2009-2010	FL/FR
K 1300 R - ABS					1300	2008-2014	FL/FR
K 1300 S					1300	2009-2014	FL/FR
K 1600 GT					1600	2011-2014	FL/FR
K 1600 GTL					1600	2011-2014	FL/FR
HUSQVARNA							
NUDA					900	2012-2013	FL/FR
NUDA R					900	2012-2013	FL/FR
NUDA R ABS					900	2013	FL/FR
WH7005L/R	310	165,5	5	5	194	20,5	-
HONDA							
CROSSTOURER					1200	2012-2013	FL/FR
WH8101L/R	300	145	5	5	168	13,8	-
APRILIA							
SRV					850	2012-2014	FL/FR
SRV ABS ATC					850	2012-2014	FL/FR
GILERA							
GP 800					800	2008-2012	FL/FR
WH8102	300	100,5	5	6	119,5	15,3	-
PIAGGIO							
BEVERLY					300	2011-2013	FL
WH8501	280	140	5	5	161	13,8	-
GILERA							
GP 800					800	2008-2012	R
WK001L/R	320	64	5	6	80	8,5	10
APRILIA							
AF1 FUTURA					125	1990-1992	FR
MX					125	2004-2007	FL
RS					125	1998-2011	FR
RS Extrema					125	1992-1997	FR
RS REPLICA					125	1992-1997	FR
TUONO					125	2003-2007	FR
PEGASO FACTORY					650	2007-2009	FL
PEGASO STRADA					650	2005-2009	FL
DORSODURO					750	2008-2014	FL/FR
DORSODURO FACTORY					750	2010-2011	FL/FR

CODICE P/N	Ø Esterno Ø Outer	Ø Interno Ø Inner	Spessore Tickness	Nr fori No. holes	Interasse fori Bolt pattern	Ø Fori Ø Holes	Campanatura Total height
WK001L/R	320	64	5	6	80	8,5	10
SHIVER GT					750	2009	FL/FR
SL SHIVER					750	2007-2014	FL/FR
MANA					850	2007-2011	FL/FR
MANA GT					850	2009-2013	FL/FR
RSV					1000	1998-2000	FL/FR
RSV R					1000	2000	FL/FR
RSV SP					1000	1999-2000	FL/FR
SL 1000 FALCO					1000	2000-2004	FL/FR
TUONO FIGHTER					1000	2002-2005	FL/FR
TUONO R (2 pads per caliper)					1000	2003-2009	FL/FR
TUONO V4 R					1000	2011-2013	FL/FR
TUONO V4 R APRC					1000	2011-2013	FL/FR
TUONO V4 R APRC ABS					1000	2014	FL/FR
CAPONORD					1200	2013-2014	FL/FR
DORSODURO					1200	2011-2013	FL/FR
DORSODURO ABS					1200	2011-2012	FL/FR
BENELLI							
CENTURY RACER					899	2011	FL/FR
TRE K					899	2011	FL/FR
TORNADO TRE					900	2001-2002	FL/FR
CAFE RACER					1130	2011	FL/FR
CENTURY RACER					1130	2011	FL/FR
TNT					1130	2004-2006	FL/FR
TNT R160					1130	2011	FL/FR
TRE K					1130	2011	FL/FR
BIMOTA							
YB7					400	1989	FL
V-DUE					500	1997-2000	FL
BB1 SUPERMONO					650	1996-2000	FL/FR
TESI 1D 851					851	1990-1991	FL/FR
DB2 SR					904	1993-2000	FL/FR
DB3 MANTRA					904	1995-2000	FL/FR
DB4					904	1998-1999	FL/FR
DIECI BIPOSTO					1000	1992-1995	FL/FR
SB8K GOBERT					1000	2006	FL/FR
SB8R					1000	1997-2000	FL/FR
SB6					1100	1996-2000	FL/FR
SB6R					1100	1998-2000	FL/FR
BMW							
G 650 X Moto					650	2007-2009	FL
CAGIVA							
MITO					125	1991-1994	FR
MITO EV					125	1995-2007	FR
MITO SP525					125	2006-2010	FR
RAPTOR					125	2003-2010	FR
PLANET					125	1997-2007	FL
SUPERCITY					125	1992-2000	FR
RIVER					600	1995-1999	FR
DUCATI							
JUNIOR SS					350	1991-1993	FL
MONSTER					400	1994-1999	FL/FR
MONSTER					400	2001-2006	FL/FR
SS SUPERSPORT					400	1992-1997	FL/FR
SS SUPERSPORT JUNIOR					400	1992-1997	FL/FR
MONSTER					600	1994-2002	FL/FR
SS SUPERSPORT					600	1994-2000	FL/FR
MONSTER					620	2002-2005	FL/FR
MONSTER single disk					620	2005-2006	FL/FR
MULTISTRADA single disk					620	2005-2006	FL/FR
SPORT					620	2003-2004	FL/FR
SS SUPERSPORT					620	2002-2005	FL/FR
MONSTER					696	2008-2014	FL/FR
MONSTER ABS					696	2010-2014	FL/FR
748 BIPOSTO					748	1995-2002	FL/FR
748 R					748	2000	FL/FR
748 S					748	1999-2002	FL/FR
748 SP					748	1995-1997	FL/FR
748 SPS					748	1998-1999	FL/FR
MONSTER					750	1994-2001	FL/FR
SPORT					750	2000-2002	FL/FR
SS SUPERSPORT					750	1991-2002	FL/FR

DISKS / DISCHI

I codici che terminano in D indicano sempre il disco Wave®
The codes that finish in D indicate always disc Wave®

FL > disco anteriore sinistro / front left disk
FR > disco anteriore destro / front right disk
R > disco posteriore / rear disk

CODICE P/N	Ø Esterno Ø Outer	Ø Interno Ø Inner	Spessore Tickness	Nr fori No. holes	Interasse fori Bolt pattern	Ø Fori Ø Holes	Campanatura Total height
WK001L/R	320	64	5	6	80	8,5	10
MONSTER					800	2003-2004	FL/FR
SPORT					800	2003-2004	FL/FR
SS SUPERSPORT					800	2003-2005	FL/FR
851 STRADA - SP					851	1988-1991	FL/FR
888 DESMOQUATTRO					888	1993-1994	FL/FR
888 SP					888	1990-1993	FL/FR
MONSTER					900	1993-2004	FL/FR
SL 900 SUPERLIGHT					900	1991-1997	FL/FR
SPORT					900	2002	FL/FR
SS SUPERSPORT					900	1991-2002	FL/FR
916 BIPOSTO					916	1994-1998	FL/FR
916 SPS					916	1997-1998	FL/FR
MONSTER S4					916	2001-2003	FL/FR
ST4					916	1998-2004	FL/FR
ST2					944	1997-2003	FL/FR
996 BIPOSTO					996	1999-2001	FL/FR
996 S					996	2001	FL/FR
MONSTER S4R					996	2003-2006	FL/FR
ST4 S					996	2001-2005	FL/FR
ST4 S ABS					996	2003	FL/FR
998 BIPOSTO					998	2002-2003	FL/FR
998 S (two pads)					998	2002-2003	FL/FR
GT					1000	2006-2010	FL/FR
GT TOURING					1000	2009	FL/FR
MONSTER					1000	2003-2005	FL/FR
MONSTER S					1000	2003-2005	FL/FR
MONSTER S2R					1000	2006-2007	FL/FR
PAUL SMART LE					1000	2006-2007	FL/FR
SPORT					1000	2006-2008	FL/FR
SPORT S					1000	2007-2009	FL/FR
SS SUPERSPORT					1000	2003-2006	FL/FR
ST3					1000	2004-2006	FL/FR
ST3 S ABS					1000	2006-2007	FL/FR
KTM							
DUKE II					640	2003-2006	FL
DUKE					690	2012-2013	FL
LAVERDA							
GHOST					650	1996-1999	FL/FR
SPORT					650	1995-2001	FL/FR
S FORMULA					750	1998-2001	FL/FR
STRIKE					750	1998-2001	FL/FR
MORINI							
9 1/2					1200	2006-2010	FL/FR
CORSARO					1200	2005-2009	FL/FR
MOTO GUZZI							
BREVA					750	2003-2007	FL/FR
NEVADA					750	2003-2007	FL/FR
V7 CLASSIC					750	2008-2013	FL/FR
V7 RACER					750	2010-2013	FL/FR
V7 SPECIAL					750	2012-2013	FL/FR
V7 STONE					750	2012-2013	FL/FR
BREVA					850	2006-2008	FL/FR
GRISO					850	2006	FL/FR
NORGE T-GTL					850	2007	FL/FR
DAYTONA IE					1000	1995-2000	FL/FR
V10 CENTAURO					1000	1996-2001	FL/FR
V10 CENTAURO SPORT					1000	1998-2000	FL/FR
BREVA					1100	2005-2007	FL/FR
BREVA ABS					1100	2005-2007	FL/FR
CALIFORNIA EV					1100	1996-2000	FL/FR
CALIFORNIA EV SPECIAL					1100	1997-2003	FL/FR
GRISO					1100	2005-2008	FL/FR
SPORT					1100	1996	FL/FR
V11 LE MANS					1100	2000-2005	FL/FR
V11 SPORT					1100	1997-2000	FL/FR
BREVA					1200	2008-2009	FL/FR
BREVA ABS					1200	2008-2009	FL/FR
GRISO 8 V					1200	2007-2013	FL/FR
NORGE T-GTL					1200	2006	FL/FR
NORGE T-GTL ABS					1200	2006-2009	FL/FR
SPORT					1200	2006-2007	FL/FR

CODICE P/N	Ø Esterno Ø Outer	Ø Interno Ø Inner	Spessore Tickness	Nr fori No. holes	Interasse fori Bolt pattern	Ø Fori Ø Holes	Campanatura Total height
WK001L/R	320	64	5	6	80	8,5	10
SPORT 8V ABS					1200	2008-2010	FL/FR
SPORT ABS					1200	2006-2007	FL/FR
STELVIO					1200	2008-2009	FL/FR
MZ							
1000 S					1000	2001-2003	FL/FR
VOXAN							
BLACK MAGIC					995	2006	FL/FR
CAFE RACER					995	2000-2006	FL/FR
ROADSTER					995	2001-2006	FL/FR
YAMAHA							
TDR (Italian model)					125	1989-1999	FL
TZR					125	1989-1992	FL
TZR					250	1989-1992	FL
SRX					400	1991	FL/FR
FZR R					750	1989-1992	FL/FR
YZF R					750	1993-1997	FL/FR
YZF SP					750	1993-1997	FL/FR
FZR EXUP					1000	1990-1995	FL/FR
FZR GENESIS					1000	1987-1989	FL/FR
XJR					1200	1995-1997	FL/FR
XJR					1300	1998	FL/FR

WK004L/R	296	58	5	6	74	6,5	17
HONDA							
RS GP					125	1991-2005	FL
RS R					125	1991-2005	FL
RS GP					250	1990-1997	FL
RS R					250	1990-1997	FL
TSR					250	1999	FL
CB N					400	1982-1988	FL
CBR F					400	1985-1987	FL
CBR F2					400	1985-1987	FL
VFR R					400	1989-1993	FL
CBR F					600	1995-1998	FL/FR
VFR F					750	1994-1997	FL/FR
CBR RR					900	1994-1997	FL/FR
VTR F FIRESTORM					1000	1997-2007	FL/FR
VTR F SUPER HAWK					1000	1997-2007	FL/FR

WK005L/R	296	62	5	6	78	6,5	17
HONDA							
CBR F					600	1999-2000	FL/FR
CROSSRUNNER					800	2011-2014	FL/FR
VFR V-TEC					800	1998-2010	FL/FR
CBR F					900	2003	FL/FR
CBR RR					900	1992-1993	FL/FR
XLV VARADERO					1000	1999-2011	FL/FR
GL F6C VALKYRIE					1500	1997-2003	FL/FR
GL GOLD WING					1800	2001-2014	FL/FR

WK006L/R	310	61	5	5	81	10,5	13,5
KAWASAKI							
ZXR					400	1991-2002	FL
ZXR					750	1989-1995	FL/FR
ZXR R					750	1989-1992	FL/FR
ZX9R NINJA					900	2000-2001	FL/FR
ZEPHYR					1100	1993-1998	FL/FR
ZRX					1100	1997-2000	FL/FR
ZZR					1100	1990-1992	FL/FR
ZRX					1200	2001-2006	FL/FR
ZRX R					1200	2001-2006	FL/FR
ZRX S					1200	2001-2006	FL/FR

WK008L/R	300	61	5	5	81	10,5	13,5
KAWASAKI							
ZZR					250	1992	FL
ZXR					400	1989-1990	FL
ZEPHYR					550	1993-2001	FL
ELIMINATOR					600	1995-1999	FL
ZX6R NINJA					600	1995-2001	FL/FR
ZZR					600	1990-2006	FL/FR
ZX6R NINJA					636	2002	FL/FR
Z 750					750	2004-2006	FL/FR
Z 750 S					750	2005-2006	FL/FR
ZEPHYR					750	1991-1999	FL/FR
ZR7					750	1999-2003	FL/FR
ZR7S					750	2001-2003	FL/FR
GPZ R					900	1990-2003	FL/FR
GTR					1000	1994-2006	FL/FR
Z 1000					1000	2003-2006	FL/FR
GPZ					1100	1995-1998	FL/FR
ZX12R NINJA					1200	2004-2006	FL/FR

WK009L/R	320	61	5	5	81	10,5	13,5
KAWASAKI							
ZX7R NINJA					750	1996-2003	FL/FR
ZX7RR NINJA					750	1996-2003	FL/FR
ZXR L					750	1993-1995	FL/FR
ZXR R					750	1993-1995	FL/FR
ZX9R NINJA					900	1994-1997	FL/FR
ZX9R NINJA					900	2002-2003	FL/FR
ZZR					1100	1993-1999	FL/FR
ZX12R NINJA					1200	2000-2003	FL/FR
ZZR					1200	2002-2005	FL/FR
VN MEAN STREAK					1500	2002-2003	FL/FR

WK010L/R	310	64	5	5	86	10,5	22,5
SUZUKI							
GSX R					750	1989-1995	FL
GSX R LIMITED EDITION					750	1989-1990	FL
GSX R					1100	1989-2000	FL

WK012L/R	310	64	5	5	86	10,5	19,5
SUZUKI							
GSF BANDIT					250	1990	FR
GS					400	1989	FR
GSF BANDIT					400	1989-1996	FR
GS E					500	1989-2003	FR
GS F					500	2004-2007	FR
RF					900	1994-1997	FR
GSF BANDIT					1200	1996-2005	FL/FR
GSX					1200	1999-2003	FL/FR

WK013L/R	290	64	5	5	86	10,5	19,5
SUZUKI							
GSF BANDIT					600	1995-1999	FL
RF R					600	1993-1997	FL

CODICE P/N	Ø Esterno Ø Outer	Ø Interno Ø Inner	Spessore Tickness	Nr fori No. holes	Interasse fori Bolt pattern	Ø Fori Ø Holes	Campanatura Total height
WK015L/R	300	64	5	6	80	8,5	10
CAGIVA							
FRECCIA C12R					125	1989-1991	FL
DUCATI							
PASO 907 I.E.					904	1990-1991	FL
MOTO GUZZI							
DAYTONA IE					1000	1991-1994	FL
YAMAHA							
TZ COMPETITION					125	1996-1997	FL
R1-Z					250	1997	FL
TZ GP					250	1996-1997	FL
XJR					400	1995-2000	FL
FZR					600	1989	FL
FZR R					600	1990-1995	FL
FZS FAZER					600	1998-2003	FL
FZ GENESIS					750	1989-1992	FL
TDM					850	1991-2001	FL
TRX					850	1995-2000	FL
FJ					1200	1988-1995	FL

WK016L/R	296	62	5	6	78	6,5	22,5
HONDA							
CB FOUR					400	1997	FL
CB F HORNET					600	1998-1999	FL

WK020L/R	320	69	5	5	91	10,5	-
SUZUKI							
GSX R					600	1997-2003	FL/FR
GSX R					750	1996-2003	FL/FR
GSX R					1000	2001-2002	FL/FR
TL R					1000	1998-2003	FL/FR
TL S					1000	1997-2001	FL/FR
GSX R HAYABUSA					1300	1999-2007	FL/FR
GSX					1400	2002-2007	FL/FR

WK021L/R	300	132	5	6	150	8,5	-
YAMAHA							
WR X					250	2008	FL
XJ N					600	1998-2003	FL/FR
XJ S DIVERSION					600	1998-2003	FL/FR
YZF R THUNDERCAT					600	1996-2004	FL/FR
YZF R6					600	1999-2002	FL/FR
TDM					900	2002-2014	FL/FR
FZS FAZER					1000	2001-2005	FL/FR
YZF R THUNDERACE					1000	1996-1998	FL/FR
YZF R1					1000	1998-2003	FL/FR
BT BULLDOG					1100	2002-2006	FL/FR
XVZ VENTURE ROYALE					1200	1984-1987	FL/FR
FJR					1300	2001-2004	FL/FR
XJR					1300	1999-2013	FL/FR
XVS MIDNIGHT STAR					1300	2007-2011	FL/FR
XV PC ROAD STAR WARRIOR					1700	2002-2007	FL/FR
XV ROADLINER					1900	2006	FL/FR

WK029L/R	320	78	5	6	100,5	10,5	10,3
TRIUMPH							
SPEED TRIPLE T509					900	1997-1998	FL/FR
DAYTONA T595					950	1996-1998	FL/FR
DAYTONA T955i					955	1999-2001	FL/FR
SPEED TRIPLE T955					955	1999-2001	FL/FR
SPRINT RS					955	2000-2004	FL/FR
SPRINT ST					955	1998-2004	FL/FR

DISKS / DISCHI

I codici che terminano in D indicano sempre il disco Wave®
The codes that finish in D indicate always disc Wave®

FL > disco anteriore sinistro / front left disk
FR > disco anteriore destro / front right disk
R > disco posteriore / rear disk

CODICE P/N	Ø Esterno Ø Outer	Ø Interno Ø Inner	Spessore Tickness	Nr fori No. holes	Interasse fori Bolt pattern	Ø Fori Ø Holes	Campanatura Total height
WK030L/R	310	62	5	6	78	6,5	21,5
HONDA							
CBR RR					900	1998-1999	FL/FR
WK031L/R	296	61	5	5	81	10,5	13,5
KAWASAKI							
ZX9R NINJA					900	1998-1999	FL/FR
WK033L/R	320	132	5	6	150	8,5	-
YAMAHA							
WR X					250	2008	FL
YZF R7					750	1999-2001	FL/FR
XVS A MIDNIGHT STAR					950	2009-2013	FL/FR
FJR ABS					1300	2003-2013	FL/FR
MT01					1670	2005-2006	FL/FR
WK036L/R	330	94	5	6	110	6,5	12,5
HONDA							
CBR RR					929	2000-2001	FL/FR
CBR RR					954	2002-2003	FL/FR
WK038L/R	310	62	5	6	78	6,5	18,5
HONDA							
CBR XX					1100	1999-2007	FL/FR
X ELEVEN					1100	2000-2003	FL/FR
CB					1284	2001-2002	FL/FR
WK039L/R	300	61	5	6	80	8,5	10,7
APRILIA							
RS REPLICA					250	1995-2003	FL
CAGIVA							
RAPTOR					650	2001-2007	FL/FR
RAPTOR					1000	2000-2006	FL/FR
V-RAPTOR					1000	2000-2006	FL/FR
XTRA-RAPTOR					1000	2002-2004	FL/FR
WK040L/R	296	94	5	6	110	6,5	12,5
HONDA							
CBR F					600	2001-2007	FL/FR
CBR F SPORT					600	2001-2002	FL/FR
CB F HORNET					900	2002-2006	FL/FR
WK041L/R	320	94	5	6	110	6,5	12,5
HONDA							
CBR RR					1000	2006-2007	FL/FR
VTR SP1 RC51					1000	2000-2001	FL/FR
VTR SP2 RC51					1000	2002-2004	FL/FR

CODICE P/N	Ø Esterno Ø Outer	Ø Interno Ø Inner	Spessore Tickness	Nr fori No. holes	Interasse fori Bolt pattern	Ø Fori Ø Holes	Campanatura Total height
WK042R	340	61	5	5	82,5	8,5	11
BUELL							
M2 CYCLONE					1200	1998-2002	FR
S1 LIGHTNING					1200	1998-2002	FR
S3 THUNDERBOLT					1200	1998-2002	FR
S3T THUNDERBOLT					1200	1998-2002	FR
X1 LIGHTNING					1200	1999-2002	FR
WK043L/R	296	58	5	6	74	6,5	22,7
HONDA							
CB F HORNET					600	2000-2006	FL/FR
CB F HORNET S					600	2000-2004	FL/FR
WK046L/R	300	132	5	5	150	8,5	-
YAMAHA							
FZ6					600	2004-2008	FL/FR
FZ6 Fazer					600	2004-2008	FL/FR
FZ6 FAZER S2					600	2007-2008	FL/FR
FZ6 S2					600	2007-2008	FL/FR
XJ6					600	2009-2011	FL/FR
XJ6 DIVERSION					600	2009-2011	FL/FR
YZF R6					600	2003-2004	FL/FR
MT03					660	2006-2011	FL/FR
MT-09					850	2014	FL/FR
MT-09 ABS					850	2014	FL/FR
WK047L/R	310	94	5	6	110	6,5	12,5
HONDA							
CBR RR					600	2003-2014	FL/FR
CBR RR - ABS					600	2009-2014	FL/FR
CB 1000 R					1000	2008-2013	FL/FR
CB 1000 R - ABS					1000	2009-2014	FL/FR
CBR RR					1000	2004-2005	FL/FR
CB					1284	2003-2008	FL/FR
WK048L/R	280	80,5	5	5	100	10,5	-
KAWASAKI							
ZX6RR NINJA					600	2003-2004	FL/FR
ZX6R NINJA					636	2003-2004	FL/FR
WK050L	320	118	5	4	134	6,5	-
HONDA							
XR R					250	1991-2004	FL
XR R					400	1995-2005	FL
XR SUPERMOTARD					400	2000-2005	FL
XR R					600	1991-2000	FL
XR R (Rear Drum Model)					600	1983-1990	FL
XR R					650	2000-2008	FL
XR SUPERMOTARD					650	2000-2008	FL

CODICE P/N	Ø Esterno Ø Outer	Ø Interno Ø Inner	Spessore Tickness	Nr fori No. holes	Interasse fori Bolt pattern	Ø Fori Ø Holes	Campanatura Total height
WK051L	320	101	5	6	117	6,5	-
HONDA							
CR E					125	1995-2008	FL
CR R					125	1995-2008	FL
CR E					250	1995-2008	FL
CR R					250	1995-2008	FL
CRF R					250	2004-2014	FL
CRF X					250	2004-2012	FL
CRF R					450	2002-2014	FL
CRF X					450	2004-2012	FL
CR E					500	1995-2001	FL
CR R					500	1995-2001	FL
HONDA-HM							
CR E SUPERMOTARD					125	2000-2008	FL
CR E SUPERMOTARD					250	2000-2009	FL
CRE F					250	2004-2009	FL
CRE X					250	2004-2008	FL
CRF R SUPERMOTARD					250	2004-2008	FL
CRF X SUPERMOTARD					250	2004-2008	FL
CRF SUPERMOTARD					450	2002-2003	FL
CRF X SUPERMOTARD					450	2004-2009	FL
WK053L	320	120	5	6	135	6,5	-
HUSQVARNA							
SM S					125	1995-1999	FL
WR					125	1995-1999	FL
CR					250	1995-1999	FL
WR					250	1995-1999	FL
WR					360	1995-1999	FL
TE					410	1995-1999	FL
TC					610	1995-1999	FL
TE					610	1995-1999	FL
WK054L	320	127	5	6	143	6,5	-
HUSABERG							
FE S					600	1999-2003	FL
FS C					650	2005-2008	FL
FS E					650	2005-2008	FL
KTM							
STING					125	1998	FL
EXC					200	1998-1999	FL
GS					300	1991-1992	FL
MX					300	1991	FL
SMR					450	2004-2013	FL
SMR					525	2004-2005	FL
LC4 ENDURO					600	1991-1992	FL
DUKE					620	1995-1998	FL
SMC					625	2005-2008	FL
DUKE II					640	1999-2002	FL
DUKE-E					640	1998	FL
SMC					660	2003-2007	FL
SUPERMOTO					690	2007-2008	FL
WK055L	320	118	5	6	134	6,5	-
SUZUKI							
RM					125	1988-2009	FL
RM SM					125	2005-2006	FL
SV SM (Italy)					125	2005-2006	FL
RM					250	1989-2012	FL
RMX S					250	1992-1998	FL
DRZ E					400	2000-2008	FL
DRZ S					400	2000-2009	FL

CODICE P/N	Ø Esterno Ø Outer	Ø Interno Ø Inner	Spessore Tickness	Nr fori No. holes	Interasse fori Bolt pattern	Ø Fori Ø Holes	Campanatura Total height
WK055L	320	118	5	6	134	6,5	-
YAMAHA							
WR					125	1998-2007	FL
YZ					125	1998-2015	FL
WR					250	1998-2001	FL
WR					250	2003-2007	FL
WR F					250	2001-2013	FL
YZ					250	1998-2014	FL
YZ F					250	2001-2015	FL
WR F					400	1998-2000	FL
YZ F					400	1998-2000	FL
WR F					426	2001-2002	FL
YZ F					426	2000-2002	FL
WR F					450	2003-2014	FL
YZ F					450	2003-2015	FL
TT					600	1993-2001	FL
TT R					600	1998-2007	FL
WK059L	320	120	5	4	135	8	9,5
HUSQVARNA							
TE					410	2000-2001	FL
SMR					450	2003-2010	FL
SMR - RR					450	2006-2008	FL
SMR					510	2005-2010	FL
TE Centennial					510	2004	FL
NOX					570	2001-2003	FL
SMR					570	2000-2004	FL
TC					570	2000-2003	FL
TE					570	2001-2004	FL
SM					610	2005-2006	FL
SM S ie					610	2007-2008	FL
TC					610	2000-2004	FL
TE					610	2000-2004	FL
SMR					630	2004-2005	FL
WK061L/R	320	78	5	5	100,5	10,5	14,5
TRIUMPH							
DAYTONA T955i					955	2002-2006	FL/FR
SPEED TRIPLE T955					955	2002-2004	FL/FR
SPRINT ST T1050					1050	2005-2008	FL/FR
WK062L/R	320	64	5	6	80	8,5	15
DUCATI							
748 R					748	2001-2002	FL/FR
996 R					996	2001	FL/FR
996 SPS					996	1999-2000	FL/FR
998 R					998	2002-2003	FL/FR
WK066L/R	320	72	5	5	90	8,5	15
DUCATI							
749					748	2002-2007	FL/FR
749 R					748	2004-2007	FL/FR
749 S					748	2003-2007	FL/FR
848 EVO					850	2011-2013	FL/FR
999 BIPOSTO					998	2002-2006	FL/FR
999 R					998	2002-2007	FL/FR
999 S					998	2002-2007	FL/FR
S4R Testastretta MONSTER					1000	2007-2008	FL/FR
S4RS Testastretta MONSTER					1000	2006-2008	FL/FR

DISKS / DISCHI

I codici che terminano in D indicano sempre il disco Wave®
The codes that finish in D indicate always disc Wave®

FL > disco anteriore sinistro / front left disk
FR > disco anteriore destro / front right disk
R > disco posteriore / rear disk

CODICE P/N	Ø Esterno Ø Outer	Ø Interno Ø Inner	Spessore Tickness	Nr fori No. holes	Interasse fori Bolt pattern	Ø Fori Ø Holes	Campanatura Total height
WK067L/R	300	69	5	5	91	10,5	-
SUZUKI							
GSX R					600	2004-2005	FL/FR
GSX R					750	2004-2005	FL/FR
GSX R					1000	2003-2004	FL/FR
WK068L/R	310	69	5	5	91	10,5	-
KAWASAKI							
KLV					1000	2004-2007	FL/FR
SUZUKI							
DL V-STROM					650	2004-2006	FL/FR
DL V-STROM					1000	2002-2010	FL/FR
SV					1000	2003-2007	FL/FR
SV S					1000	2003-2007	FL/FR
WK069L/R	290	69	5	5	91	10,5	-
SUZUKI							
GSX F					600	2004-2006	FL/FR
GSF BANDIT					650	2005-2006	FL/FR
SV					650	2003-2010	FL/FR
SV S					650	2003-2009	FL/FR
GSX F					750	2004-2006	FL/FR
WK070L/R	300	80,5	5	5	100	10,5	-
KAWASAKI							
ZX6R NINJA					600	2007-2014	FL/FR
ZX6RR NINJA					600	2005-2006	FL/FR
ZX6R NINJA					636	2005-2006	FL/FR
ER6F					650	2006-2014	FL/FR
ER6N					650	2006-2014	FL/FR
VERSYS					650	2007-2014	FL/FR
Z 750					750	2007-2012	FL/FR
Z 750 ABS					750	2007-2012	FL/FR
Z 750 R					750	2011-2012	FL/FR
Z 750 R - ABS					750	2011-2012	FL/FR
VERSYS					1000	2012-2014	FL/FR
Z 1000					1000	2007-2013	FL/FR
Z 1000 - ABS					1000	2007-2013	FL/FR
Z 1000 SX					1000	2011-2014	FL/FR
Z 1000 SX ABS					1000	2011-2014	FL/FR
ZX-10R					1000	2004-2007	FL/FR
WK071L/R	320	132	5	5	150	8,5	-
YAMAHA							
FZ1					1000	2006-2014	FL/FR
FZ1 FAZER					1000	2006-2012	FL/FR
FZ1 FAZER ABS					1000	2007-2012	FL/FR
YZF R1					1000	2004-2006	FL/FR
WK073L/R	320	64	5	6	80	8,5	10
APRILIA							
RSV					1000	2001-2003	FL/FR
RSV FACTORY					1000	2003-2007	FL/FR
RSV R					1000	2001-2008	FL/FR
RSV4 FACTORY					1000	2009-2011	FL/FR
RSV4 FACTORY APRC					1000	2011-2012	FL/FR
RSV4 R					1000	2009-2012	FL/FR

CODICE P/N	Ø Esterno Ø Outer	Ø Interno Ø Inner	Spessore Tickness	Nr fori No. holes	Interasse fori Bolt pattern	Ø Fori Ø Holes	Campanatura Total height
WK073L/R	320	64	5	6	80	8,5	10
TUONO					1000	2002-2005	FL/FR
TUONO R (4 pads per caliper)					1000	2003-2005	FL/FR
BENELLI							
TORNADO TRE					900	2003-2006	FL/FR
TORNADO TRE RS					900	2004-2006	FL/FR
CAFE RACER					1130	2005-2007	FL/FR
TITANIUM					1130	2005-2007	FL/FR
TNT RS					1130	2005-2007	FL/FR
TORNADO					1130	2006	FL/FR
BIMOTA							
SB8K SANTAMONICA					1000	2006	FL/FR
DUCATI							
998 S (four pads)					998	2002-2003	FL/FR
KTM							
DUKE					690	2008-2011	FL/FR
SMC R					690	2012-2014	FL/FR
SUPERMOTO PRESTIGE					690	2007-2008	FL/FR
WK074L	320	132	5	6	150	8,5	14,25
YAMAHA							
XT X					660	2004-2014	FL
WK076L/R	310	100	5	5	120	10,5	-
SUZUKI							
GSX R					600	2006-2007	FL/FR
GSX R					750	2006-2007	FL/FR
GSX R					1000	2005-2008	FL/FR
WK077L	320	118,3	5	4	134	9,2	-
SUZUKI							
RMZ					250	2007-2015	FL
RMX					450	2010-2012	FL
RMZ					450	2005-2015	FL
WK078L/R	310	132	5,8	5	150	8,5	-
YAMAHA							
YZF R1					1000	2007-2014	FL/FR
WK079L	310	127	5	6	143	6,5	-
HUSABERG							
FS C					450	2003-2008	FL
FS E					450	2003-2008	FL
FS					570	2010	FL
KTM							
SMR					450	2004-2013	FL
SMR					525	2005	FL
SMR					560	2006-2008	FL
WK083L/R	320	78	5	5	100,5	10,5	17,5
TRIUMPH							
SPEED TRIPLE					1050	2005-2007	FL/FR
TIGER					1050	2007-2011	FL/FR
TIGER ABS					1050	2007-2013	FL/FR

CODICE P/N	Ø Esterno Ø Outer	Ø Interno Ø Inner	Spessore Tickness	Nr fori No. holes	Interasse fori Bolt pattern	Ø Fori Ø Holes	Campanatura Total height
WK085L/R	310	78	5	5	100,5	10,5	14,5
TRIUMPH							
BABY SPEED					600	2001-2002	FL/FR
DAYTONA					600	2003-2007	FL/FR
SPEED FOUR					600	2003-2006	FL/FR
TT					600	2000-2003	FL/FR
DAYTONA					650	2005-2006	FL/FR
WK086L	310	118	5	6	134	6,5	-
SUZUKI							
DRZ SM					400	2005-2009	FL
WK087L	320	120	5	4	135	8,5	-
BETA							
RR					250	2005-2009	FL
RR 4T ENDURO					350	2011-2012	FL
RR 4T ENDURO					400	2005-2012	FL
RR 4T ENDURO					450	2005-2012	FL
RR 4T ENDURO					498	2012	FL
RR 4T ENDURO					520	2010-2011	FL
RR 4T ENDURO					525	2005-2009	FL
HUSQVARNA							
CR					125	2000-2010	FL
CR					125	2012	FL
SM S					125	2000-2009	FL
SMS4					125	2010-2011	FL
TE					125	2010-2013	FL
WR					125	2000-2012	FL
WR E					125	2000-2012	FL
CR					250	2000-2011	FL
TC					250	2004-2013	FL
TE					250	2004-2013	FL
TXC					250	2011	FL
WR					250	2000-2013	FL
WR					300	2009-2013	FL
TE					310	2009-2013	FL
TXC					310	2011	FL
SMR					449	2011-2012	FL
TC					450	2002-2010	FL
TE					450	2002-2010	FL
TC					510	2002-2009	FL
TE					510	2002-2010	FL
SMR					511	2011-2012	FL
TE ie					610	2006-2007	FL
TE					630	2010-2012	FL
WK089L/R	310	121,5	5	5	142	10,5	-
SUZUKI							
GSR					400	2006-2008	FL/FR
GSR					600	2006-2010	FL/FR
DL V-STROM					650	2007-2012	FL/FR
DL V-STROM ABS					650	2007-2014	FL/FR
GSF BANDIT					650	2007-2012	FL/FR
GSF BANDIT ABS					650	2011-2014	FL/FR
GSX F					650	2008-2012	FL/FR
GSX F ABS					650	2008-2014	FL/FR
GSR					750	2011-2014	FL/FR
GSR ABS					750	2011-2014	FL/FR
GSF BANDIT					1200	2006	FL/FR
GSF BANDIT					1250	2007-2011	FL/FR
GSF BANDIT S					1250	2011-2012	FL/FR
GSX FA					1250	2010-2014	FL/FR
B-KING					1300	2008-2010	FL/FR
GSX R HAYABUSA					1300	2008-2012	FL/FR

CODICE P/N	Ø Esterno Ø Outer	Ø Interno Ø Inner	Spessore Tickness	Nr fori No. holes	Interasse fori Bolt pattern	Ø Fori Ø Holes	Campanatura Total height
WK090L/R	310	80,5	5	5	100	10,5	-
KAWASAKI							
ZX6R NINJA					636	2013-2015	FL/FR
ZX6R NINJA ABS					636	2013-2015	FL/FR
Z 800					800	2013	FL/FR
Z 800 ABS					800	2013	FL/FR
Z 800e					800	2013	FL/FR
Z 800e ABS					800	2013	FL/FR
ZX-10R					1000	2008-2015	FL/FR
ZX-10R ABS					1000	2011-2015	FL/FR
GTR					1400	2007-2014	FL/FR
ZZR					1400	2006-2007	FL/FR
ZZR ABS					1400	2008-2014	FL/FR
WK092L/R	320	80	5	5	101,5	8,5	10
MV AGUSTA							
BRUTALE R					910	2006-2008	FL/FR
F4 312 RR					1000	2007-2008	FL/FR
F4 R					1000	2006-2007	FL/FR
F4 RR CORSACORTA					1000	2011-2012	FL/FR
F4 TAMBURINI					1000	2006-2008	FL/FR
BRUTALE RR					1078	2008-2009	FL/FR
WK093L/R	290	121,5	5	5	142	10,5	-
SUZUKI							
GLADIUS					650	2009-2014	FL/FR
GLADIUS ABS					650	2009-2014	FL/FR
SV ABS					650	2007-2010	FL/FR
SV S ABS					650	2007-2009	FL/FR
WK094L/R	310	84,5	5	5	100,5	10,5	14
TRIUMPH							
DAYTONA					675	2006-2012	FL/FR
DAYTONA R					675	2011	FL/FR
STREET TRIPLE					675	2007-2012	FL/FR
STREET TRIPLE R					675	2009-2012	FL/FR
WK095L/R	330	72	5	5	90	8,5	15
DUCATI							
PANIGALE 899					898	2014	FR
DESMOSEDICI RR					1000	2008-2009	FL/FR
1098					1100	2007-2008	FL/FR
1098 S					1100	2007-2008	FL/FR
1098 S TRICOLORE					1100	2007-2008	FL/FR
STREETFIGHTER					1100	2009-2011	FL/FR
1198					1198	2009-2011	FL/FR
PANIGALE					1200	2012-2013	FL/FR
PANIGALE ABS					1200	2012-2014	FR
PANIGALE R					1200	2014	FR
PANIGALE S					1200	2012-2013	FL/FR
PANIGALE S ABS					1200	2012-2014	FR
PANIGALE S TRICOLORE					1200	2012-2013	FL/FR

DISKS / DISCHI

I codici che terminano in D indicano sempre il disco Wave®
The codes that finish in D indicate always disc Wave®

FL > disco anteriore sinistro / front left disk
FR > disco anteriore destro / front right disk
R > disco posteriore / rear disk

CODICE P/N	Ø Esterno Ø Outer	Ø Interno Ø Inner	Spessore Tickness	Nr fori No. holes	Interasse fori Bolt pattern	Ø Fori Ø Holes	Campanatura Total height
WK096L/R	296	94	5	6	110	6,5	14,5
HONDA							
CB F HORNET					600	2007-2013	FL/FR
CB F HORNET ABS					600	2007-2013	FL/FR
CBR F					600	2011-2013	FL/FR
CBR F ABS					600	2011-2013	FL/FR
WK097L/R	305	72	5	5	90	8,5	10
DUCATI							
HYPERMOTARD 796					800	2010-2012	FL/FR
HYPERMOTARD					1100	2007-2009	FL/FR
HYPERMOTARD EVO					1100	2010-2012	FL/FR
HYPERMOTARD EVO SP					1100	2010-2012	FL/FR
HYPERMOTARD S					1100	2007-2009	FL/FR
WK098L/R	320	94	5	6	110	6,5	15,25
HONDA							
CBR RR					1000	2008-2014	FL/FR
CBR RR - ABS					1000	2009-2014	FL/FR
WK101L /R	310	102	5	6	120	8,15	-
SUZUKI							
GSX R					600	2008-2014	FL/FR
GSX R					750	2008-2014	FL/FR
GSX R					1000	2009-2014	FL/FR
WK102L/R	320	150	5	5	165	10,5	-
TRIUMPH							
SPEED TRIPLE					1050	2008-2013	FL/FR
SPEED TRIPLE ABS					1050	2011	FL/FR
SPRINT GT ABS					1050	2010-2014	FL/FR
WK103R	290	130	5	6	150	10,5	-
KAWASAKI							
NINJA 250 R					250	2008-2012	FR
WK104L	320	64	5	6	80	8,5	10
KTM							
SUPERMOTO PRESTIGE					690	2007-2008	FL
SUPERMOTO R					690	2008	FL
RC8					1190	2008-2011	FL/FR
RC8 R					1190	2010-2012	FL/FR

CODICE P/N	Ø Esterno Ø Outer	Ø Interno Ø Inner	Spessore Tickness	Nr fori No. holes	Interasse fori Bolt pattern	Ø Fori Ø Holes	Campanatura Total height
WK106L/R	292	56,3	5	5	82,5	8,5	-
HARLEY D.							
XL 883 L SPORTSTER LOW					883	2007-2013	FL
XL 883 N IRON					883	2009-2013	FL
XL 883 R ROADSTER					883	2010-2011	FL
XL 883 R SPORTSTER					883	2000-2003	FL
XL 883 SPORTSTER CUSTOM					883	2004-2010	FL
XL SPORTSTER CUSTOM 53					883	2000-2003	FL
XLH 883 SPORTSTER					883	2000-2006	FL
XLH 883 SPORTSTER HUGGER					883	2000-2003	FL
XL 1200 C SPORTSTER CUSTOM					1200	2004-2013	FL
XL 1200 L SPORTSTER LOW					1200	2007-2013	FL
XL 1200 R SPORTSTER ROADSTER					1200	2004-2008	FL
XL 1200 S SPORT					1200	2000-2003	FL
XL 1200 SPORTSTER - FORTY EIGHT					1200	2010-2011	FL
XL 1200 SPORTSTER N NIGHTSTER					1200	2007-2013	FL
XLH 1200 SPORTSTER					1200	2000-2003	FL/FR
XR					1200	2008-2010	FL/FR
XR 1200 X					1200	2010-2012	FL/FR
FLSTC 1340 HERITAGE SOFTAIL CLASSIC					1340	2000-2002	FL
FLSTC FAT BOY					1340	2000-2002	FL
FLHR/I ROAD KING					1450	2000-2007	FL/FR
FLHRCI ROAD KING CLASSIC					1450	2000-2006	FL/FR
FLHT/I ELECTRA GLIDE STANDARD					1450	2000-2006	FL/FR
FLHTCUI ELECTRA GLIDE ULTRA CLASSIC					1450	2000-2006	FL/FR
FLSTC HERITAGE SOFTAIL CLASSIC					1450	2000-2006	FL/FR
FLSTF FAT BOY					1450	2000-2006	FL
FLSTF/I FAT BOY					1450	2003-2006	FL
FLSTS HERITAGE SPRINGER					1450	2000-2003	FL
FLTR/I ROAD GLIDE					1450	2000-2007	FL/FR
FXD DYNA SUPER GLIDE					1450	2000-2003	FL
FXDL DYNA LOW RIDER					1450	2000-2006	FL
FXDWG DYNA WIDE GLIDE					1450	2000-2005	FL
FXDX DYNA SUPER GLIDE T-SPORT					1450	2000-2005	FL/FR
FXST SOFTAIL STANDARD					1450	2000-2007	FL/FR
FXSTB/I NIGHT TRAIN					1450	2000-2007	FL
FXSTD/I SOFTAIL DEUCE					1450	2000-2006	FL
FXSTS/I SPRINGER SOFTAIL					1450	2000-2006	FL
FLHRC ROAD KING CLASSIC					1584	2007	FL/FR
FLHT/I ELECTRA GLIDE STANDARD					1584	2007	FL/FR
FLHTCU ELECTRA GLIDE ULTRA CLASSIC					1584	2007-2008	FL/FR
FLHX STREET GLIDE					1584	2006-2007	FL/FR
FLSTB FAT BOY SPECIAL					1584	2010-2013	FL
FLSTB SOFTAIL CROSS BONES					1584	2008-2011	FL
FLSTC HERITAGE SOFTAIL CLASSIC					1584	2007-2014	FL
FLSTF FAT BOY					1584	2007-2014	FL
FLSTN SOFTAIL DELUXE					1584	2005-2014	FL
FLSTSE CVO SOFTAIL CONVERTIBLE					1584	2010-2011	FL
FXCW ROCKER					1584	2008-2009	FL
FXCWC ROCKER C					1584	2008-2013	FL
FXS BLACKLINE					1584	2011-2013	FL
FXSTC SOFTAIL CUSTOM					1584	2008-2010	FR
FXSTB NIGHT TRAIN					1584	2008-2010	FL
FXSTSS CVO SOFTAIL SPRINGER					1584	2009	FL/FR
WK107R	320	64	5	6	80	8,5	10
MOTO GUZZI							
BREVA ABS					1100	2005-2007	FR
BREVA ABS					1200	2008-2009	FR
NORGE T-GTL ABS					1200	2006-2009	FR
SPORT 8V ABS					1200	2008-2010	FR
SPORT ABS					1200	2006-2007	FR
WK109L/R	320	181	5	5	203,3	13,8	-
BMW							
S 1000 R					1000	2014	FL/FR
S 1000 RR					1000	2010-2014	FL/FR

CODICE P/N	Ø Esterno Ø Outer	Ø Interno Ø Inner	Spessore Tickness	Nr fori No. holes	Interasse fori Bolt pattern	Ø Fori Ø Holes	Campanatura Total height
WK110L/R	320	72	5	5	90	8,5	-
DUCATI							
MONSTER 796					800	2011-2014	FL/FR
MONSTER 796 ABS					800	2011-2014	FL/FR
HYPERMOTARD					820	2013-2014	FL/FR
HYPERMOTARD SP					820	2013-2014	FL/FR
HYPERSTRADA					820	2013-2014	FL/FR
MONSTER 1100					1100	2009-2010	FL/FR
MONSTER 1100 ABS					1100	2010	FL/FR
MONSTER DIESEL					1100	2013	FL/FR
MONSTER EVO					1100	2011-2012	FL/FR
MONSTER EVO ABS					1100	2011-2013	FL/FR
DIAVEL					1200	2011-2013	FL/FR
DIAVEL AMG					1200	2013	FL/FR
DIAVEL CARBON					1200	2011-2012	FL/FR
DIAVEL STRADA					1200	2014	FL/FR
MONSTER					1200	2014	FL/FR
MULTISTRADA					1200	2010-2012	FL/FR
MULTISTRADA ABS					1200	2010-2014	FL/FR
MULTISTRADA S ABS					1200	2010-2012	FL/FR
MULTISTRADA S ABS PIKES PEAK					1200	2012-2014	FL/FR
MULTISTRADA S GT					1200	2012-2013	FL/FR
MULTISTRADA S SPORT					1200	2011-2012	FL/FR
MULTISTRADA S TOURING					1200	2010-2014	FL/FR
MULTISTRADA TOURING ABS					1200	2010-2011	FL/FR
WK111L/R	310	132	5	5	150	8,5	-
YAMAHA							
YZF R6					600	2005-2014	FL/FR
FAZER 8					800	2010-2012	FL/FR
FZ8					800	2010-2013	FL/FR
XT Z SUPER TENERE					1200	2010-2014	FL/FR
XT ZE SUPER TENERE					1200	2014	FL/FR
WK112L/R	305	64	5	6	80	8,5	10
KTM							
SUPERMOTO					950	2005-2007	FL/FR
SUPERMOTO R					950	2006-2008	FL/FR
SM T					990	2009-2013	FL/FR
SUPERMOTO					990	2007-2012	FL/FR
SUPERMOTO R					990	2010-2012	FL/FR
WK113L/R	320	94	5	5	110	6,5	12,5
HONDA							
VFR F					1200	2010-2014	FL/FR
VFR F DCT					1200	2010-2014	FL/FR
WK114L/R	320	64	5	6	80	8,5	10
KTM							
SUPER DUKE					990	2005-2011	FL/FR
SUPER DUKE R					990	2007-2013	FL/FR
WK115L	320	127	5	6	143	6,5	-
HUSABERG							
FE					400	2000-2003	FL
FE E					400	2001-2003	FL
FS C					400	2001-2003	FL

CODICE P/N	Ø Esterno Ø Outer	Ø Interno Ø Inner	Spessore Tickness	Nr fori No. holes	Interasse fori Bolt pattern	Ø Fori Ø Holes	Campanatura Total height
WK115L	320	127	5	6	143	6,5	-
FS E					400	2001-2003	FL
FS C					450	2003-2004	FL
FS E					450	2003-2004	FL
FC					470	2001-2002	FL
FC					501	1999-2003	FL
FE E					501	1999-2004	FL
FE S					501	1999-2004	FL
FC					550	2001-2005	FL
FE E					550	2004-2008	FL
FC					600	1999-2003	FL
FE E					600	1999-2002	FL
FE E					650	2001-2008	FL
FS C					650	2001-2004	FL
FS E					650	2001-2004	FL
FX E					650	2001-2005	FL
HUSQVARNA							
TC					125	2014-2015	FL
TE					125	2014	FL
FC					250	2014	FL
FE					250	2014-2015	FL
TC					250	2014	FL
TE					250	2014	FL
TE					300	2014-2015	FL
FC					350	2014-2015	FL
FE					350	2014	FL
FC					450	2014-2015	FL
FE					450	2014-2015	FL
FE					510	2014	FL
KTM							
EXC					125	1998-2015	FL
EXC SIX DAYS					125	2009-2015	FL
GS					125	1993-1997	FL
MX					125	1992	FL
SX					125	1993-2015	FL
SXS					125	2000-2010	FL
SX					144	2007-2010	FL
SX					150	2011-2015	FL
EXC					200	2000-2005	FL
EXC					200	2005-2015	FL
MXC					200	1998-2003	FL
SX					200	2003-2009	FL
XC W					200	2006-2009	FL
EXC					250	1998-2014	FL
EXC E					250	2015	FL
EXC F					250	2003-2014	FL
EXC F SIX DAYS					250	2009-2015	FL
EXC G					250	2004-2009	FL
EXC SIX DAYS					250	2009-2015	FL
GS					250	1993-1997	FL
MX					250	1992	FL
MXC					250	1998-2003	FL
SX					250	1993-2015	FL
SX F					250	2003-2015	FL
SXS					250	2003-2010	FL
SXS F					250	2006-2009	FL
XC F					250	2007-2011	FL
XC W					250	2006-2009	FL
EXC					300	1997-2014	FL
EXC E					300	2015	FL
EXC SIX DAYS					300	2009-2015	FL
GS					300	1993-1996	FL
MX					300	1992	FL
MXC					300	1998-2005	FL
SX					300	1993	FL
SX					300	1997-2003	FL
XC					300	2006-2009	FL
XC W					300	2006-2009	FL
EXC F					350	2010-2014	FL
EXC F SIX DAYS					350	2011-2015	FL

I codici che terminano in D indicano sempre il disco Wave®
The codes that finish in D indicate always disc Wave®

FL > disco anteriore sinistro / front left disk
FR > disco anteriore destro / front right disk

R > disco posteriore / rear disk

CODICE P/N	Ø Esterno Ø Outer	Ø Interno Ø Inner	Spessore Tickness	Nr fori No. holes	Interasse fori Bolt pattern	Ø Fori Ø Holes	Campanatura Total height
WK115L	320	127	5	6	143	6,5	-
GS					350	1993	FL
SX F					350	2011-2015	FL
EXC					380	1998-2002	FL
MXC					380	1998-2001	FL
SX					380	1998-2002	FL
EGS					400	1996-1999	FL
EXC					400	1994-2011	FL
EXC G					400	2004-2006	FL
SX					400	2000-2002	FL
XC W					400	2007-2009	FL
EXC					450	2003-2014	FL
EXC R					450	2008-2009	FL
EXC SIX DAYS					450	2009-2015	FL
MXC					450	2003-2006	FL
SX F					450	2003-2015	FL
SXS					450	2003-2010	FL
SXS F					450	2003-2010	FL
XC					450	2007-2009	FL
XC F					450	2007-2009	FL
XC G					450	2006	FL
XC W					450	2007-2009	FL
EXC					500	2011-2014	FL
EXC SIX DAYS					500	2011-2015	FL
MX					500	1992	FL
SX					500	1993-1995	FL
SX F					505	2007-2009	FL
XC F					505	2007-2009	FL
EXC					520	2000-2002	FL
MXC					520	2001-2002	FL
SX					520	2000-2002	FL
EXC					525	2003-2008	FL
MXC					525	2003-2005	FL
SX					525	2003-2006	FL
XC					525	2006-2008	FL
XC G					525	2006-2008	FL
XC W					525	2006-2008	FL
EXC					530	2010-2011	FL
EXC R					530	2008-2009	FL
EXC SIX DAYS					530	2009	FL
SXC					540	1999-2000	FL
SXS					540	2001-2006	FL
GS					600	1993	FL
MX					600	1992	FL
LC4 EGS					620	1996-2002	FL
LC4 SC SUPERCOMP					620	1998-2004	FL
LC4 SUPERMOTO					620	1999-2001	FL
LC4 SC SUPERCOMP					625	2002	FL
LC4 SUPERMOTO					625	2002-2004	FL
SXC					625	2003-2008	FL
LC4 ADVENTURE					640	2001-2003	FL
LC4 ENDURO					640	1999-2007	FL
LC4 SUPERMOTO					640	1998-2002	FL
WK116L/R	320	80	5	5	101,5	8,5	-
MV AGUSTA							
BRUTALE					675	2012-2014	FL/FR
F3					675	2012-2014	FL/FR
BRUTALE					800	2013-2014	FL/FR
F3					800	2014	FL/FR
RIVALE					800	2013-2014	FL/FR
F4 FRECCE TRICOLORI					1000	2010-2012	FL/FR
F4 R					1000	2010-2013	FL/FR

CODICE P/N	Ø Esterno Ø Outer	Ø Interno Ø Inner	Spessore Tickness	Nr fori No. holes	Interasse fori Bolt pattern	Ø Fori Ø Holes	Campanatura Total height
WK117L/R	320	64	5	6	80	8,5	-
BMW							
HP4					1000	2013-2014	FL/FR
WK118L/R	320	72	5	5	90	8,5	15
DUCATI							
848					850	2008-2010	FL/FR
MONSTER 1100 S					1100	2009-2010	FL/FR
MONSTER 1100 S ABS					1100	2010	FL/FR
WK119L/R	320	78	5	5	100	10,5	12
TRIUMPH							
SPEED TRIPLE R					1050	2012-2014	FL/FR
SPEED TRIPLE R ABS					1050	2012-2014	FL/FR
WK120L	300	124	5	6	142,5	6,5	-
KTM							
LC8 ADVENTURE ABS					990	2006-2012	FL
WK121R	300	124	5	6	142,5	6,5	-
KTM							
LC8 ADVENTURE ABS					990	2006-2012	FR
WK122L/R	310	82,5	5	5	102	10,5	-
TRIUMPH							
STREET TRIPLE					675	2013-2014	FL/FR
STREET TRIPLE R					675	2013-2014	FL/FR
WK123R	296	94	5	6	110	6,5	17,8
HONDA							
CBR R					250	2011-2013	FR
CBR R ABS					250	2011-2013	FR
CBR R ABS					300	2014	FR
WK124L	310	78	5	5	100,5	10,5	-
TRIUMPH							
AMERICA					865	2010-2013	FL
BONNEVILLE					865	2007-2013	FL
BONNEVILLE SE					865	2009-2011	FL
SPEEDMASTER					865	2012-2013	FL
WK125L/R	290	64	5	5	86	10,5	19,5
SUZUKI							
GSF BANDIT					600	2000-2004	FL/FR
GSX F					600	1998-2003	FL/FR
SV					650	1999-2002	FL/FR
SV S					650	1999-2002	FL/FR
GSX F					750	1998-2003	FL/FR

CODICE P/N	Ø Esterno Ø Outer	Ø Interno Ø Inner	Spessore Tickness	Nr fori No. holes	Interasse fori Bolt pattern	Ø Fori Ø Holes	Campanatura Total height
WK126L	320	109	5	4	126	9,5	-
KAWASAKI							
KX					125	2006-2008	FL
KX					250	2006-2008	FL
KX F					250	2006-2014	FL
KLX R					450	2007-2012	FL
KX F					450	2006-2014	FL
WK127L	330	72	5	5	90	8,5	15
DUCATI							
PANIGALE 899					898	2014	FL
PANIGALE ABS					1200	2012-2014	FL
PANIGALE R					1200	2014	FL
PANIGALE S ABS					1200	2012-2014	FL
WK128L/R	310	144	5	6	166	10,5	-
TRIUMPH							
BONNEVILLE					800	2001-2006	FL
BONNEVILLE- T100					865	2005-2009	FL
BONNEVILLE- T100					865	2013	FL
SCRAMBLER					865	2006-2009	FL
THUNDERBIRD SPORT					900	1996-2004	FL/FR
WK129L/R	320	144	5	6	166	10,5	-
TRIUMPH							
THRUXTON					865	2004-2014	FL
ADVENTURER					900	1996-2001	FL/FR
LEGEND TT					900	1998-2000	FL
THUNDERBIRD					900	1995-1999	FL
WK130L/R	320	138	5	6	154	6,5	-
KTM							
ADVENTURE					1190	2013-2014	FL/R
ADVENTURE R					1190	2013-2014	FL/FR
WK131L	320	52	5	5	80	6,5	-
KTM							
DUKE					690	2014	FL
WL1001	267	108,5	5	6	125	6,5	-
KTM							
ADVENTURE					1190	2013-2014	R
ADVENTURE R					1190	2013-2014	R
WL101L/R	300	105	5	6	120	6,5	-
BMW							
F 650 CS					650	2002-2007	FR
F 650 GS DAKAR					650	1999-2007	FL
G 650 GS					650	2009-2014	FL
G 650 GS SERTAO					650	2012-2014	FL
G 650 X CHALLENGE					650	2007-2009	FL

CODICE P/N	Ø Esterno Ø Outer	Ø Interno Ø Inner	Spessore Tickness	Nr fori No. holes	Interasse fori Bolt pattern	Ø Fori Ø Holes	Campanatura Total height
WL101L/R	300	105	5	6	120	6,5	-
G 650 X COUNTRY					650	2007-2009	FL
F 700 GS					800	2013-2014	FL/FR
F 800 GS					800	2009-2014	FL/FR
F 800 GS ADVENTURE					800	2013-2014	FL/FR
HUSQVARNA							
TR 650 STRADA					650	2013-2014	FL
TR 650 TERRA					650	2013-2014	FL
WL103L	320	127	5	6	143	6,5	-
HUSABERG							
FE S					501	1999-2004	FL
FE S					600	1999-2003	FL
KTM							
SMR					450	2004-2013	FL
SMR					525	2004-2005	FL
LC4 EGS					620	1996-2002	FL
LC4 SUPERMOTO					620	1999-2001	FL
LC4 SUPERMOTO					625	2002-2004	FL
SMC					625	2005-2008	FL
DUKE II					640	1999-2002	FL
DUKE-E					640	1998	FL
LC4 ADVENTURE					640	2001-2003	FL
SMC					660	2003-2007	FL
SUPERMOTO					690	2007-2008	FL
WL104L/R	310	132	5	5	150	8,5	-
YAMAHA							
XT Z SUPER TENERE					1200	2010-2014	FL/FR
XT ZE SUPER TENERE					1200	2014	FL/FR
WL105L/R	310	121,5	5	5	142	8,5	-
SUZUKI							
DL V-STROM					650	2007-2012	FL/FR
DL V-STROM ABS					650	2007-2014	FL/FR
WL108L/R	305	82,5	5	5	100,5	10,5	-
TRIUMPH							
TIGER					800	2010-2014	FL/FR
TIGER ABS					800	2011-2014	FL/FR
TIGER XC					800	2010-2014	FL/FR
TIGER XC ABS					800	2010-2014	FL/FR
TIGER EXPLORER					1200	2012-2014	FL/FR
TIGER EXPLORER XC					1200	2013-2014	FL/FR
WL4002	260	120	3,2	4	135	8,5	-
BETA							
RR					250	2005-2009	FL
RR 4T ENDURO					350	2011-2012	FL
RR 4T ENDURO					400	2005-2012	FL
RR 4T ENDURO					450	2005-2012	FL
RR 4T ENDURO					498	2012	FL
RR 4T ENDURO					520	2010-2011	FL
RR 4T ENDURO					525	2005-2006	FL
RR 4T ENDURO					525	2006-2009	FL

DISKS / DISCHI

I codici che terminano in D indicano sempre il disco Wave®
The codes that finish in D indicate always disc Wave®

FL > disco anteriore sinistro / front left disk
FR > disco anteriore destro / front right disk
R > disco posteriore / rear disk

CODICE P/N	Ø Esterno Ø Outer	Ø Interno Ø Inner	Spessore Tickness	Nr fori No. holes	Interasse fori Bolt pattern	Ø Fori Ø Holes	Campanatura Total height
WL4003	270	101,3	3,2	6	117	6,5	-
HONDA							
CR E					125	1995-2008	FL
CR R					125	2004-2008	FL
CR E					250	1995-2008	FL
CR R					250	2004-2008	FL
CRF R					250	2004-2014	FL
CRF X					250	2004-2012	FL
CRF R					450	2002-2014	FL
CRF X					450	2004-2012	FL
CR E					500	1995-2001	FL
CR R					500	1995-2001	FL
HONDA-HM							
CRF ENDURO					230	2004-2010	FL
CRE F					250	2004-2009	FL
CRE F 250 R					250	2004-2009	FL
CRE F 250 X					250	2008-2011	FL
CRE X					250	2004-2009	FL
CRF F					250	2004-2009	FL
CRF R					250	2008-2013	FL
CRE F 300 X					300	2008-2009	FL
CRE F 450 R ENDURO					450	2004-2008	FL
CRE F 450 X					450	2004-2009	FL
CRF R					450	2004-2014	FL
CRE F 490 X					490	2007	FL
CRE F 500 X					500	2008-2009	FL
CRM F 500 X					500	2011	FL

CODICE P/N	Ø Esterno Ø Outer	Ø Interno Ø Inner	Spessore Tickness	Nr fori No. holes	Interasse fori Bolt pattern	Ø Fori Ø Holes	Campanatura Total height
WL4005	260	120	3,2	4	135	6,5	-
HUSQVARNA							
CR					125	2000-2012	FL
SM S					125	2000-2012	FL
SMS4					125	2010-2011	FL
TE					125	2010-2013	FL
WR					125	2006-2012	FL
WR E					125	2000-2012	FL
CR					250	2000-2011	FL
TC					250	2004-2013	FL
TE					250	2004-2013	FL
TXC					250	2011	FL
WR					250	2000-2013	FL
WR					300	2009-2013	FL
TE					310	2009-2013	FL
TXC					310	2011	FL
WR					360	2000-2004	FL
TE					410	2000-2001	FL
TC					449	2011-2013	FL
TE					449	2011-2013	FL
TC					450	2002-2010	FL
TE					450	2002-2010	FL
TXC					450	2011-2012	FL
TXC					480	2013	FL
TC					510	2002-2009	FL
TE					510	2002-2005	FL
TE					510	2007-2010	FL
TXC					510	2009-2010	FL
TE					511	2011-2013	FL
TXC					511	2011-2013	FL
TC					570	2000-2003	FL
TE E					610	2007	FR
TE					630	2010-2012	FL

CODICE P/N	Ø Esterno Ø Outer	Ø Interno Ø Inner	Spessore Tickness	Nr fori No. holes	Interasse fori Bolt pattern	Ø Fori Ø Holes	Campanatura Total height
WL4007	270	127,5	3,2	6	143	6,5	-
HUSABERG							
TE					125	2012-2014	FL
FE					250	2013-2014	FL
TE					250	2011-2014	FL
TE					300	2011-2014	FL
FE					350	2013-2014	FL
FE					390	2010-2012	FL
FE					400	2000-2003	FL
FE E					400	2001-2003	FL
FE					450	2009-2014	FL
FX					450	2010	FL
FC					470	2001-2002	FL
FC					501	1999-2003	FL
FE E					501	1999-2004	FL
FE S					501	1999-2004	FL
FE					510	2013-2014	FL
FC					550	2001-2005	FL
FE E					550	2004-2008	FL
FE					570	2010-2012	FL
FC					600	1999-2003	FL
FE E					600	1999-2002	FL
FE E					650	2001-2008	FL
FX E					650	2001-2005	FL
HUSQVARNA							
TC					125	2014-2015	FL
TE					125	2014	FL
FC					250	2014	FL
FE					250	2014-2015	FL
TC					250	2014	FL
TE					250	2014	FL
TE					300	2014-2015	FL
FC					350	2014-2015	FL
FE					350	2014	FL
FC					450	2014-2015	FL
FE					450	2014-2015	FL
FE					510	2014	FL
KTM							
EXC					125	1998-2015	FL
EXC SIX DAYS					125	2009-2015	FL
GS					125	1993-1997	FL
MX					125	1992	FL
SX					125	1993-2015	FL
SXS					125	2000-2010	FL
SX					144	2007-2010	FL
SX					150	2008-2015	FL
EXC					200	1998-2015	FL
MXC					200	1998-2003	FL
SX					200	2003-2009	FL
XC W					200	2006-2009	FL
EXC					250	1998-2014	FL
EXC E					250	2015	FL
EXC F					250	2003-2015	FL
EXC F SIX DAYS					250	2009-2015	FL
EXC G					250	2004-2009	FL
EXC SIX DAYS					250	2009-2015	FL
GS					250	1993-1997	FL
MX					250	1992	FL
MXC					250	1998-2003	FL
SX					250	1993	FL
SX					250	1998-2015	FL
SX F					250	2003-2015	FL
SXS					250	2003-2010	FL
SXS F					250	2006-2009	FL
XC F					250	2007-2012	FL
XC W					250	2006-2012	FL
EXC					300	1997-2014	FL
EXC E					300	2015	FL
EXC SIX DAYS					300	2009-2015	FL
GS					300	1991-1996	FL
MX					300	1991-1992	FL
MXC					300	1998-2005	FL

CODICE P/N	Ø Esterno Ø Outer	Ø Interno Ø Inner	Spessore Tickness	Nr fori No. holes	Interasse fori Bolt pattern	Ø Fori Ø Holes	Campanatura Total height
WL4007	270	127,5	3,2	6	143	6,5	-
SX					300	1993	FL
SX					300	1997-2003	FL
XC					300	2006-2012	FL
XC W					300	2006-2012	FL
EXC F					350	2010-2015	FL
EXC F SIX DAYS					350	2011-2015	FL
GS					350	1993	FL
SX F					350	2011-2015	FL
EXC					380	1998-2002	FL
MXC					380	1998-2001	FL
SX					380	1998-2002	FL
EGS					400	1996-1999	FL
EXC					400	1994-2011	FL
EXC G					400	2004-2006	FL
SX					400	2000-2002	FL
XC W					400	2007-2009	FL
EXC					450	2003-2015	FL
EXC R					450	2008-2009	FL
EXC SIX DAYS					450	2009-2015	FL
MXC					450	2003-2006	FL
SX F					450	2003-2015	FL
SXS					450	2003-2010	FL
SXS F					450	2003-2010	FL
XC					450	2007-2009	FL
XC F					450	2007-2009	FL
XC G					450	2006	FL
XC W					450	2007-2009	FL
EXC					500	2011-2015	FL
EXC SIX DAYS					500	2011-2015	FL
MX					500	1992	FL
SX					500	1993-1995	FL
SX F					505	2007-2009	FL
XC F					505	2007-2009	FL
EXC					520	2000-2002	FL
MXC					520	2001-2002	FL
SX					520	2000-2002	FL
EXC					525	2003-2008	FL
MXC					525	2003-2005	FL
SX					525	2003-2006	FL
XC					525	2006-2008	FL
XC G					525	2006-2008	FL
XC W					525	2006-2008	FL
EXC					530	2010-2011	FL
EXC R					530	2008-2009	FL
EXC SIX DAYS					530	2009	FL
SXC					540	1999-2000	FL
SXS					540	2001-2006	FL
GS					600	1993	FL
LC4 ENDURO					600	1991-1992	FL
MX					600	1992	FL
LC4 SC SUPERCOMP					620	1998-2004	FL
LC4 SC SUPERCOMP					625	2002	FL
SXC					625	2003-2008	FL

CODICE P/N	Ø Esterno Ø Outer	Ø Interno Ø Inner	Spessore Tickness	Nr fori No. holes	Interasse fori Bolt pattern	Ø Fori Ø Holes	Campanatura Total height
WL4008	270	109,5	3,2	4	126	9,5	-
KAWASAKI							
KX					125	2006-2008	FL
KX					250	2006-2008	FL
KX F					250	2006-2015	FL
KLX R					450	2007-2014	FL
KX F					450	2006-2015	FL

CODICE P/N	Ø Esterno Ø Outer	Ø Interno Ø Inner	Spessore Tickness	Nr fori No. holes	Interasse fori Bolt pattern	Ø Fori Ø Holes	Campanatura Total height
WL4010	270	118	3,2	6	134	6,5	-
SUZUKI							
RM					125	1988-2009	FL
RM					250	1989-2012	FL
RMX S					250	1992-1998	FL
DRZ E					400	2000-2008	FL
DRZ S					400	2000-2009	FL
YAMAHA							
WR					125	1998-2007	FL
YZ					125	1998-2015	FL
WR					250	1998-2001	FL
WR					250	2003-2007	FL
WR F					250	2001-2013	FL
YZ					250	1998-2014	FL
YZ F					250	2001-2015	FL
WR F					400	1998-2000	FL
YZ F					400	1998-2000	FL
WR F					426	2001-2002	FL
YZ F					426	2000-2002	FL
WR F					450	2003-2014	FL
YZ F					450	2003-2015	FL

CODICE P/N	Ø Esterno Ø Outer	Ø Interno Ø Inner	Spessore Tickness	Nr fori No. holes	Interasse fori Bolt pattern	Ø Fori Ø Holes	Campanatura Total height
WL4012	270	118,3	3,2	4	134	9,2	-
SUZUKI							
RMZ					250	2007-2015	FL
RMX					450	2010-2012	FL
RMZ					450	2005-2015	FL

CODICE P/N	Ø Esterno Ø Outer	Ø Interno Ø Inner	Spessore Tickness	Nr fori No. holes	Interasse fori Bolt pattern	Ø Fori Ø Holes	Campanatura Total height
WL4014	270	70,5	3,2	6	89	6,5	-
TM							
EN					80	1998-2003	FL
MX JR					85	2003-2011	FL
EN					125	1998-2014	FL
MX					125	1998-2014	FL
SMR					125	2005-2011	FL
EN					144	2008-2014	FL
MX					144	2007-2014	FL
EN					250	1998-2014	FL
EN F					250	2004-2012	FL
EN Fi					250	2010-2014	FL
MX					250	1998-2014	FL
MX Fi					250	2010-2014	FL
EN					300	2005-2014	FL
MX					300	2005-2014	FL
MX					400	2003	FL
EN F					450	2005-2014	FL
MX F					450	2005-2014	FL
EN F					530	2005-2014	FL
MX F					530	2005-2014	FL

CODICE P/N	Ø Esterno Ø Outer	Ø Interno Ø Inner	Spessore Tickness	Nr fori No. holes	Interasse fori Bolt pattern	Ø Fori Ø Holes	Campanatura Total height
WL4016	260	127,5	3,2	6	143	6,5	-
BETA							
RR 2T ENDURO					250	2013-2014	FL
RR 2T RACING					250	2013-2014	FL
RR 2T ENDURO					300	2013-2014	FL
RR 2T RACING					300	2013-2014	FL
RR 4T ENDURO					350	2013-2014	FL
RR 4T RACING					350	2014	FL
RR 4T ENDURO					400	2013-2014	FL
RR 4T ENDURO					450	2013-2014	FL
RR 4T RACING					450	2013-2014	FL
RR 4T ENDURO					498	2013-2014	FL
RR 4T RACING					498	2013-2014	FL

I codici che terminano in D indicano sempre il disco Wave®
The codes that finish in D indicate always disc Wave®

FL > disco anteriore sinistro / front left disk
FR > disco anteriore destro / front right disk

R > disco posteriore / rear disk

CODICE P/N	Ø Esterno Ø Outer	Ø Interno Ø Inner	Spessore Tickness	Nr fori No. holes	Interasse fori Bolt pattern	Ø Fori Ø Holes	Campanatura Total height
WL702L/R	320	132	5	5	150	8,5	-
YAMAHA							
FZ1					1000	2006-2014	FL/FR
FZ1 FAZER					1000	2006-2012	FL/FR
FZ1 FAZER ABS					1000	2007-2012	FL/FR
WL703L/R	300	80,5	5	5	100	10,5	-
KAWASAKI							
ER6F					650	2006-2014	FL/FR
ER6N					650	2006-2014	FL/FR
Z 750					750	2007-2012	FL/FR
Z 750 R					750	2011-2012	FL/FR
Z 750 R - ABS					750	2011-2012	FL/FR
Z 1000					1000	2007-2013	FL/FR
Z 1000 - ABS					1000	2007-2013	FL/FR
Z 1000 SX					1000	2011-2014	FL/FR
Z 1000 SX ABS					1000	2011-2014	FL/FR
WL704L/R	300	132	5	5	150	8,5	-
YAMAHA							
FZ6					600	2004-2008	FL/FR
FZ6 Fazer					600	2004-2008	FL/FR
FZ6 FAZER S2					600	2007-2008	FL/FR
FZ6 S2					600	2007-2008	FL/FR
XJ6					600	2009-2011	FL/FR
XJ6 DIVERSION					600	2009-2011	FL/FR
MT03					660	2006-2011	FL/FR
WL705L/R	290	69	5	5	91	10,5	-
SUZUKI							
GSF BANDIT					650	2005-2006	FL/FR
SV					650	2003-2010	FL/FR
SV S					650	2003-2009	FL/FR
WL708L/R	310	132	5	5	150	8,5	-
YAMAHA							
FAZER 8					800	2010-2012	FL/FR
FZ8					800	2010-2013	FL/FR
WL709L/R	300	132	5	6	150	8,5	-
YAMAHA							
XJ N					600	1998-2003	FL/FR
XJ S DIVERSION					600	1998-2003	FL
XJR					1300	1999-2013	FL/FR
WL8001L/R	267	132	5	6	150	8,5	-
YAMAHA							
XP T-MAX					500	2008-2011	FL/FR
XP T-MAX ABS					500	2008-2011	FL/FR

CODICE P/N	Ø Esterno Ø Outer	Ø Interno Ø Inner	Spessore Tickness	Nr fori No. holes	Interasse fori Bolt pattern	Ø Fori Ø Holes	Campanatura Total height
WL8002R	260	58	4	5	80	10,5	-
KYMCO							
DOWNTOWN i					125	2009-2014	FR
K-XCT					125	2012-2014	FR
SUPER DINK					125	2009-2013	FR
DOWNTOWN i					200	2010-2014	FR
DOWNTOWN i					300	2009-2014	FR
DOWNTOWN i ABS					300	2010-2014	FR
SUPER DINK					300	2009-2012	FR
YA01RI	220	115	4	6	133	6,5	-
TM							
GS- MC					125	1990-1992	R
VOR							
MX- EN					503	2000-2002	FL
YAMAHA							
DT R					125	1988-2003	R
TDR (Italian model)					125	1989-1999	R
WR					125	1989-1997	R
YZ					125	1988-1997	R
WR R					200	1992-1995	R
TT R					250	1993	R
WR					250	1990-1997	R
YZ					250	1988-1997	R
YZ					360	1989	R
YZ RALLY					360	1990-1993	R
WR F					400	1998-2000	R
YZ F					400	1998-2000	R
WR Z					500	1992-1993	R
TT					600	1993-2001	R
TT R					600	1998-2007	R
YA01RID	220	115,5	4	6	133	6,5	-
TM							
GS- MC					125	1990-1992	R
VOR							
MX- EN					503	2000-2002	FL
YAMAHA							
DT R					125	1988-2003	R
TDR (Italian model)					125	1989-1999	R
WR					125	1989-1997	R
YZ					125	1988-1997	R
WR R					200	1992-1995	R
TT R					250	1993	R
WR					250	1990-1997	R
YZ					250	1988-1997	R
YZ					360	1989	R
YZ RALLY					360	1990-1993	R
WR F					400	1998-2000	R
YZ F					400	1998-2000	R
WR Z					500	1992-1993	R
TT					600	1993-2001	R
TT R					600	1998-2007	R
YA02FI	267	132	4	6	150	6,5	-
YAMAHA							
XT					600	1987-1990	FL
XT 4 VALVES					600	1986-1989	FL
XT E					600	1990-1994	FL
XT Z TENERE					600	1986-1991	FL

CODICE P/N	Ø Esterno Ø Outer	Ø Interno Ø Inner	Spessore Tickness	Nr fori No. holes	Interasse fori Bolt pattern	Ø Fori Ø Holes	Campanatura Total height
YA02RI	220	86	4,5	6	102	6,5	-
YAMAHA							
XT					600	1987-1990	R
XT 4 VALVES					600	1988-1989	R
XT E					600	1990-2003	R
XT Z TENERE					600	1987-1991	R
XTZ TENERE					660	1991-1998	R
YA03FI	245	115	4	6	133	6,5	-
YAMAHA							
TZR R					50	1993-2002	FR
YFM BEAR TRACKER					250	2001-2004	FL/FR
XTZ SUPER TENERE					750	1989-2000	FL/FR
YA03RI	245	115	5	6	133	6,5	-
YAMAHA							
RD LC					500	1984-1988	R
XTZ SUPER TENERE					750	1989-2000	R
YA05FI	282	132	5	6	150	8,5	-
YAMAHA							
TDR (Japanese model)					125	1989	FL
XV VIRAGO (Rear Drum Model)					125	1997-2001	FL
XVS DRAG STAR (Rear Drum Model)					125	1999-2004	FR
SRV (Rear Drum Model)					250	1992-1997	FL
XV VIRAGO					250	1995-2007	FL
XVS DRAG STAR					250	2001	FR
GTS					1000	1993-1996	R
FJ					1100	1984-1985	R
FJ					1100	1984-1985	FL/FR
XVS DRAG STAR					1100	1999-2006	R
FJ					1200	1986-1995	R
FJ					1200	1986-1987	FL/FR
FJ ABS					1200	1991-1993	R
V MAX					1200	1986-2006	R
V MAX					1200	1986-1992	FL/FR
FJR					1300	2001-2004	R
FJR ABS					1300	2003-2013	R
YA05FID	282	132	5	6	150	8,5	-
YAMAHA							
TDR (Japanese model)					125	1989	FL
XV VIRAGO (Rear Drum Model)					125	1997-2001	FL
XVS DRAG STAR (Rear Drum Model)					125	1999-2004	FR
SRV (Rear Drum Model)					250	1992-1997	FL
XV VIRAGO					250	1995-2007	FL
XVS DRAG STAR					250	2001	FR
GTS					1000	1993-1996	R
FJ					1100	1984-1985	R
FJ					1100	1984-1985	FL/FR
XVS DRAG STAR					1100	1999-2006	R
FJ					1200	1986-1995	R
FJ					1200	1986-1987	FL/FR
FJ ABS					1200	1991-1993	R
V MAX					1200	1986-2006	R
V MAX					1200	1986-1992	FL/FR
FJR					1300	2001-2004	R
FJR ABS					1300	2003-2013	R

CODICE P/N	Ø Esterno Ø Outer	Ø Interno Ø Inner	Spessore Tickness	Nr fori No. holes	Interasse fori Bolt pattern	Ø Fori Ø Holes	Campanatura Total height
YA06FI	230	85	3	6	102	6,5	-
TM							
GS- MC					125	1990-1992	FL
YAMAHA							
DT R					125	1988-2003	FL
DTZ TENERE					125	1989-1994	FL
WR					125	1989	FL
YZ					125	1985-1989	FL
YZ					250	1985-1989	FL
TT (Rear Drum Model)					350	1986-1995	FL
YZ					360	1989	FL
WR Z					500	1992-1993	FL
TT					600	1989-1992	FL
YA06FID	230	85,5	3	6	102	6,5	-
TM							
GS- MC					125	1990-1992	FL
DT R					125	1988-2003	FL
DTZ TENERE					125	1989-1994	FL
WR					125	1989	FL
YZ					125	1985-1989	FL
YZ					250	1985-1989	FL
TT (Rear Drum Model)					350	1986-1995	FL
YZ					360	1989	FL
WR Z					500	1992-1993	FL
TT					600	1989-1992	FL
YA08RI	245	115	4,5	6	133	8,5	-
DUCATI							
JUNIOR SS					350	1991-1993	R
MONSTER					400	1994-1999	R
MONSTER					400	2001-2006	R
SS SUPERSPORT					400	1992-1997	R
SS SUPERSPORT JUNIOR					400	1992-1997	R
MONSTER					600	1994-2002	R
SS SUPERSPORT					600	1994-2000	R
MONSTER					620	2002-2005	R
MONSTER double disk					620	2005-2006	R
MONSTER single disk					620	2005-2006	R
MULTISTRADA double disk					620	2005-2006	R
MULTISTRADA single disk					620	2005-2006	R
SPORT					620	2003-2004	R
SS SUPERSPORT					620	2002-2005	R
MONSTER					695	2006-2008	R
MONSTER					696	2008-2014	R
MONSTER ABS					696	2010-2014	R
MONSTER					750	1994-2001	R
SPORT					750	2000-2002	R
SS SUPERSPORT					750	1991-2002	R
MONSTER					800	2003-2004	R
SPORT					800	2003-2004	R
SS SUPERSPORT					800	2003-2005	R
851 STRADA - SP					851	1988-1991	R
888 DESMOQUATTRO					888	1993-1994	R
888 SP					888	1990-1993	R
PANIGALE 899					898	2014	R
MONSTER					900	1993-2004	R
SL 900 SUPERLIGHT					900	1991-1997	R
SPORT					900	2002	R
SS SUPERSPORT					900	1991-2002	R
PASO 906					904	1989-1990	R
PASO 907 I.E.					904	1990-1991	R
MONSTER S4					916	2001-2003	R
ST4					916	1998-2004	R

DISKS / DISCHI

I codici che terminano in D indicano sempre il disco Wave®
The codes that finish in D indicate always disc Wave®

FL > disco anteriore sinistro / front left disk
FR > disco anteriore destro / front right disk
R > disco posteriore / rear disk

CODICE P/N	Ø Esterno Ø Outer	Ø Interno Ø Inner	Spessore Tickness	Nr fori No. holes	Interasse fori Bolt pattern	Ø Fori Ø Holes	Campanatura Total height
YA08RI	245	115	4,5	6	133	8,5	-
ST2					944 1997-2003		R
ST4 S					996 2001-2005		R
ST4 S ABS					996 2003-2006		R
GT					1000 2006-2010		R
GT TOURING					1000 2009		R
MONSTER					1000 2003-2005		R
MONSTER S					1000 2003-2005		R
PAUL SMART LE					1000 2006-2007		R
SPORT					1000 2006-2008		R
SPORT S					1000 2007-2009		R
SS SUPERSPORT					1000 2003-2006		R
ST3					1000 2004-2006		R
ST3 S ABS					1000 2006-2007		R
LAVERDA							
GHOST					650 1996-1999		R
SPORT					650 1995-2001		R
S FORMULA					750 1998-2001		R
STRIKE					750 1998-2001		R
YAMAHA							
SRX					400 1991		R
XJR					400 1995-2000		R
FZR					600 1989		R
FZR R					600 1990-1995		R
FZS FAZER					600 1998-2003		R
XJ N					600 1991-2003		R
XJ S DIVERSION					600 1991-2003		R
YZF R THUNDERCAT					600 1996-2004		R
YZF R					750 1993-1997		R
YZF R7					750 1999-2001		R
YZF SP					750 1993-1997		R
TDM					850 1991-2001		R
TRX					850 1995-2000		R
TDM					900 2002-2014		R
YZF R THUNDERACE					1000 1996-1998		R
YZF R1					1000 1998-2001		R

CODICE P/N	Ø Esterno Ø Outer	Ø Interno Ø Inner	Spessore Tickness	Nr fori No. holes	Interasse fori Bolt pattern	Ø Fori Ø Holes	Campanatura Total height
YA08RID	245	115,5	4,5	6	133	8,5	-
DUCATI							
JUNIOR SS					350 1991-1993		R
MONSTER					400 1994-1999		R
MONSTER					400 2001-2006		R
SS SUPERSPORT					400 1992-1997		R
SS SUPERSPORT JUNIOR					400 1992-1997		R
MONSTER					600 1994-2002		R
SS SUPERSPORT					600 1994-2000		R
MONSTER					620 2002-2005		R
MONSTER double disk					620 2005-2006		R
MONSTER single disk					620 2005-2006		R
MULTISTRADA double disk					620 2005-2006		R
MULTISTRADA single disk					620 2005-2006		R
SPORT					620 2003-2004		R
SS SUPERSPORT					620 2002-2005		R
MONSTER					695 2006-2008		R
MONSTER					696 2008-2014		R
MONSTER ABS					696 2010-2014		R
MONSTER					750 1994-2001		R
SPORT					750 2000-2002		R
SS SUPERSPORT					750 1991-2002		R
MONSTER					800 2003-2004		R
SPORT					800 2003-2004		R
SS SUPERSPORT					800 2003-2005		R
851 STRADA - SP					851 1988-1991		R
888 DESMOQUATTRO					888 1993-1994		R
888 SP					888 1990-1993		R
PANIGALE 899					898 2014		R
MONSTER					900 1993-2004		R

CODICE P/N	Ø Esterno Ø Outer	Ø Interno Ø Inner	Spessore Tickness	Nr fori No. holes	Interasse fori Bolt pattern	Ø Fori Ø Holes	Campanatura Total height
YA08RID	245	115,5	4,5	6	133	8,5	-
SL 900 SUPERLIGHT					900 1991-1997		R
SPORT					900 2002		R
SS SUPERSPORT					900 1991-2002		R
PASO 906					904 1989-1990		R
PASO 907 I.E.					904 1990-1991		R
MONSTER S4					916 2001-2003		R
ST4					916 1998-2004		R
ST2					944 1997-2003		R
ST4 S					996 2001-2005		R
ST4 S ABS					996 2003-2006		R
GT					1000 2006-2010		R
GT TOURING					1000 2009		R
MONSTER					1000 2003-2005		R
MONSTER S					1000 2003-2005		R
PAUL SMART LE					1000 2006-2007		R
SPORT					1000 2006-2008		R
SPORT S					1000 2007-2009		R
SS SUPERSPORT					1000 2003-2006		R
ST3					1000 2004-2006		R
ST3 S ABS					1000 2006-2007		R
LAVERDA							
GHOST					650 1996-1999		R
SPORT					650 1995-2001		R
S FORMULA					750 1998-2001		R
STRIKE					750 1998-2001		R
YAMAHA							
SRX					400 1991		R
XJR					400 1995-2000		R
FZR					600 1989		R
FZR R					600 1990-1995		R
FZS FAZER					600 1998-2003		R
XJ N					600 1991-2003		R
XJ S DIVERSION					600 1991-2003		R
YZF R THUNDERCAT					600 1996-2004		R
YZF R					750 1993-1997		R
YZF R7					750 1999-2001		R
YZF SP					750 1993-1997		R
TDM					850 1991-2001		R
TRX					850 1995-2000		R
TDM					900 2002-2014		R
YZF R THUNDERACE					1000 1996-1998		R
YZF R1					1000 1998-2001		R

CODICE P/N	Ø Esterno Ø Outer	Ø Interno Ø Inner	Spessore Tickness	Nr fori No. holes	Interasse fori Bolt pattern	Ø Fori Ø Holes	Campanatura Total height
YA09RI	267	132	5	6	150	8,5	-
YAMAHA							
SR					125 1997-2002		FL
RD LC					350 1983-1993		FL/FR
RD LC					350 1983-1993		R
RD LC					500 1984-1988		FL/FR
XJ					600 1983-1991		R
XJ					600 1983-1991		FL/FR
FZ GENESIS					750 1987-1992		R
FZ GENESIS					750 1987-1988		FL/FR
FZX FAZER					750 1986-1990		R
FZX FAZER					750 1986-1990		FL/FR
XV VIRAGO (Rear Drum Model)					750 1990-1993		FL/FR
XJ S DIVERSION					900 1994-1996		R
FZR EXUP					1000 1990-1995		R
FZR GENESIS					1000 1987-1989		R
FZS FAZER					1000 2001-2005		R
BT BULLDOG					1100 2002-2006		R
XV VIRAGO (Rear Drum Model)					1100 1986-1993		FL/FR
XJR					1200 1995-1997		R
XJR					1300 1998-2013		R
MT01					1670 2005-2011		R

CODICE P/N	Ø Esterno Ø Outer	Ø Interno Ø Inner	Spessore Tickness	Nr fori No. holes	Interasse fori Bolt pattern	Ø Fori Ø Holes	Campanatura Total height
YA09RID	267	132,5	5	6	150	8,5	-
YAMAHA							
SR					125 1997-2002		FL
RD LC					350 1983-1993		FL/FR
RD LC					350 1983-1993		R
RD LC					500 1984-1988		FL/FR
XJ					600 1983-1991		R
XJ					600 1983-1991		FL/FR
FZ GENESIS					750 1987-1992		R
FZ GENESIS					750 1987-1988		FL/FR
FZX FAZER					750 1986-1990		R
FZX FAZER					750 1986-1990		FL/FR
XV VIRAGO (Rear Drum Model)					750 1990-1993		FL/FR
XJ S DIVERSION					900 1994-1996		R
FZR EXUP					1000 1990-1995		R
FZR GENESIS					1000 1987-1989		R
FZS FAZER					1000 2001-2005		R
BT BULLDOG					1100 2002-2006		R
XV VIRAGO (Rear Drum Model)					1100 1986-1993		FL/FR
XJR					1200 1995-1997		R
XJR					1300 1998-2013		R
MT01					1670 2005-2011		R

CODICE P/N	Ø Esterno Ø Outer	Ø Interno Ø Inner	Spessore Tickness	Nr fori No. holes	Interasse fori Bolt pattern	Ø Fori Ø Holes	Campanatura Total height
YA10FI	245	118	3	6	134	6,5	-
HRD							
GS 97					125 1997		FL
GS 97					250 1997		FL
YAMAHA							
WR					125 1998-2000		FL
YZ					125 1998-2000		FL
WR					250 1992-2000		FL
YZ					250 1998-2000		FL
WR F					400 1998-2000		FL
YZ F					400 1998-2000		FL
YZ F					426 2000		FL

CODICE P/N	Ø Esterno Ø Outer	Ø Interno Ø Inner	Spessore Tickness	Nr fori No. holes	Interasse fori Bolt pattern	Ø Fori Ø Holes	Campanatura Total height
YA10RI	240	115	4	6	133	6,5	-
HRD							
GS 97					250 1997		R
YAMAHA							
WR					125 1998-2001		R
YZ					125 1998-2001		R
WR					250 1998-2001		R
WR F					250 2001		R
YZ					250 1998-2001		R
YZ F					250 2001		R
WR F					426 2001		R
YZ F					426 2000-2001		R

CODICE P/N	Ø Esterno Ø Outer	Ø Interno Ø Inner	Spessore Tickness	Nr fori No. holes	Interasse fori Bolt pattern	Ø Fori Ø Holes	Campanatura Total height
YA10RID	240	115,5	4,5	6	133	6,5	-
HRD							
GS 97					250 1997		R
YAMAHA							
WR					125 1998-2001		R
YZ					125 1998-2001		R
WR					250 1998-2001		R
WR F					250 2001		R
YZ					250 1998-2001		R
YZ F					250 2001		R
WR F					426 2001		R
YZ F					426 2000-2001		R

CODICE P/N	Ø Esterno Ø Outer	Ø Interno Ø Inner	Spessore Tickness	Nr fori No. holes	Interasse fori Bolt pattern	Ø Fori Ø Holes	Campanatura Total height
YA12FI	155	41	3,5	3	66	10,5	-
AGRATI G.							
BIG-WHEELS					50 1991-1994		FL
BIP-RACING					50 1994		FL
GRINTA					50 1995		FL
PONY SR					50 1992-1995		FL
QUEENIE					50 1995		FL
APRILIA							
AMICO SPORT LX					50 1992		FL
SONIC (Rear Drum Model)					50 1998-2008		FL
SONIC GP (Rear Drum Model)					50 1998-2008		FL
FANTIC M.							
BIG WHEELS					50 1991-1994		FL
GRINTA					50 1995-2000		FL
GILERA							
EASY MOVING					50 1996		FL
ITALJET							
BAZOOKA 2					50 1992-1997		FL
PISTA 2					50 1992		FL
YANKEE					50 1994		FL
MBK							
BOOSTER R					50 1993-1995		FL
BOOSTER SPIRIT					50 1996-1998		FL
EVOLIS					50 1992-1994		FL
FIZZ					50 1994-1997		FL
FORTE (Rear Drum Model)					50 1994-1995		FL
TARGET					50 1992-1994		FL
EVOLIS					80 1994-1997		FL
PGO							
BIG MAX (Rear Drum Model)					50 1994-2006		FL
MEGA FIFTY					50 1999		FL
PMX					50 1997		FL
BIG MAX (Rear Drum Model)					80 1995-1996		FL
PIAGGIO							
ZIP FAST RIDER 2T					50 1993-2000		FL
ZIP RST					50 1996-1999		FL
VILLA							
AX (Rear Drum Model)					50 1993		FL
GZ (Rear Drum Model)					50 1993		FL
YAMAHA							
AXIS					50 1994-1996		FL
BWS (Rear Drum Model)					50 1993-1998		FL
CR Z					50 1992-1995		FL
JOG Z					50 1991		FL
YM BREEZE (Rear Drum Model)					50 1994-1998		FL

CODICE P/N	Ø Esterno Ø Outer	Ø Interno Ø Inner	Spessore Tickness	Nr fori No. holes	Interasse fori Bolt pattern	Ø Fori Ø Holes	Campanatura Total height
YA12FID	155	43	3,5	3	66	10,5	-
AGRATI G.							
BIG-WHEELS					50 1991-1994		FL
BIP-RACING					50 1994		FL
GRINTA					50 1995		FL
PONY SR					50 1992-1995		FL
QUEENIE					50 1995		FL
APRILIA							
AMICO SPORT LX					50 1992		FL
SONIC (Rear Drum Model)					50 1998-2008		FL
SONIC GP (Rear Drum Model)					50 1998-2008		FL
FANTIC M.							
BIG WHEELS					50 1991-1994		FL
GRINTA					50 1995-2000		FL
GILERA							
EASY MOVING					50 1996		FL
ITALJET							
BAZOOKA 2					50 1992-1997		FL
PISTA 2					50 1992		FL
YANKEE					50 1994		FL

DISKS / DISCHI

I codici che terminano in D indicano sempre il disco Wave®
The codes that finish in D indicate always disc Wave®

FL > disco anteriore sinistro / front left disk
FR > disco anteriore destro / front right disk
R > disco posteriore / rear disk

CODICE P/N	Ø Esterno Ø Outer	Ø Interno Ø Inner	Spessore Tickness	Nr fori No. holes	Interasse fori Bolt pattern	Ø Fori Ø Holes	Campanatura Total height
YA12FID	155	43	3,5	3	66	10,5	-
MBK							
BOOSTER R					50	1993-1995	FL
BOOSTER SPIRIT					50	1996-1998	FL
EVOLIS					50	1992-1994	FL
FIZZ					50	1994-1997	FL
FORTE (Rear Drum Model)					50	1994-1995	FL
TARGET					50	1992-1994	FL
EVOLIS					80	1994-1997	FL
PGO							
BIG MAX (Rear Drum Model)					50	1994-2006	FL
MEGA FIFTY					50	1999	FL
PMX					50	1997	FL
BIG MAX (Rear Drum Model)					80	1995-1996	FL
PIAGGIO							
ZIP FAST RIDER 2T					50	1993-2000	FL
ZIP RST					50	1996-1999	FL
VILLA							
AX (Rear Drum Model)					50	1993	FL
GZ (Rear Drum Model)					50	1993	FL
YAMAHA							
AXIS					50	1994-1996	FL
BWS (Rear Drum Model)					50	1993-1998	FL
CR Z					50	1992-1995	FL
JOG Z					50	1991	FL
YM BREEZE (Rear Drum Model)					50	1994-1998	FL
YA17FI	282	132	4	6	150	8,5	-
YAMAHA							
XT E					600	1995-2003	FL
XTZ TENERE					660	1991-1998	FR
XV VIRAGO (Rear Drum Model)					750	1994-2000	FR
YA18FID	267	118	4	6	134	6,5	-
YAMAHA							
TT					600	1993-2001	FL
TT R					600	1998-2007	FL
YA19FI	320	198	5	6	216	8,5	-
YAMAHA							
XJ N					600	1991-1997	FL
XJ S DIVERSION					600	1991-1997	FL
XVZ ROYAL STAR					1300	1996-2007	R
YA21FL	298	132	5	6	150	8,5	-
YAMAHA							
XVS VIRAGO (Rear Drum Model)					535	1996-2000	FR
XJ N					600	1998-2003	FL/FR
XJ S DIVERSION					600	1998-2003	FL
XVS DRAG STAR (Rear Drum Model)					650	1997-2004	FR
XVS DRAG STAR CLASSIC (Rear Drum Model)					650	1998-2007	FR
XVS DRAG STAR					1100	1999-2006	FL/FR
V MAX					1200	1993-2006	FL/FR
XVZ ROYAL STAR					1300	1996-2007	FL/FR
WILD STAR					1600	1999-2007	FL/FR
XV ROADLINER					1900	2006	FL/FR

CODICE P/N	Ø Esterno Ø Outer	Ø Interno Ø Inner	Spessore Tickness	Nr fori No. holes	Interasse fori Bolt pattern	Ø Fori Ø Holes	Campanatura Total height
YA22FID	220	100,5	3	6	120	6,5	-
SUZUKI							
RM					85	2005-2011	FL
YAMAHA							
YZ					80	1993-2001	FL
YZ					85	2002-2015	FL
YA22RID	190	85	3	6	100	6,5	-
YAMAHA							
YZ					80	1993-2001	R
YZ					85	2002-2015	R
YA23RI	230	84	5	3	102	8,5	-
YAMAHA							
YP MAJESTY DX					250	1998-1999	R
YP MAJESTY DX/ABS					250	1999	R
YA23RID	230	85,5	5	3	102	8,5	-
YAMAHA							
YP MAJESTY DX					250	1998-1999	R
YP MAJESTY DX/ABS					250	1999	R
YA24RI	220	115	4	6	133	8,5	-
YAMAHA							
TT					250	2000	R
YZF R6					600	1999-2002	R
YZF R1					1000	2002-2003	R
YA24RID	220	116	5	6	133	8,5	-
YAMAHA							
TT					250	2000	R
YZF R6					600	1999-2002	R
YZF R1					1000	2002-2003	R
YA25FI	282	132	4	6	150	8,5	-
YAMAHA							
XP T-MAX					500	2001-2003	FL
YA25FID	282	132,5	4	6	150	8,5	-
YAMAHA							
XP T-MAX					500	2001-2003	FL
YA30FI	161	48	3,5	4	66	10,5	-
YAMAHA							
YFS R BLASTER					200	2003-2006	FL/FR
YFM RAPTOR					250	2008-2009	FL/FR
YFM R RAPTOR					350	2004-2008	FL/FR

CODICE P/N	Ø Esterno Ø Outer	Ø Interno Ø Inner	Spessore Tickness	Nr fori No. holes	Interasse fori Bolt pattern	Ø Fori Ø Holes	Campanatura Total height
YA30FI	161	48	3,5	4	66	10,5	-
YFM X WARRIOR					350	1987-2003	FL/FR
YFZ BANSHEE					350	1987-2009	FL/FR
YFZ S					450	2004-2009	FL/FR
YFM RN RAPTOR					660	2001-2005	FL/FR
YFM RN RAPTOR					700	2006-2009	FL/FR
YA30FID	160	48,5	3,5	4	66	10,5	-
YAMAHA							
YFS R BLASTER					200	2003-2006	FL/FR
YFM BEAR TRACKER					250	2001-2004	FL/FR
YFM RAPTOR					250	2008-2009	FL/FR
YFM R RAPTOR					350	2004-2008	FL/FR
YFM X WARRIOR					350	1987-2003	FL/FR
YFZ BANSHEE					350	1987-2009	FL/FR
YFZ S					450	2004-2009	FL/FR
YFM RN RAPTOR					660	2001-2005	FL/FR
YFM RN RAPTOR					700	2006-2009	FL/FR
YA30RI	220	58,3	4	4	76	8,5	-
YAMAHA							
YFS BLASTER					200	1988-2002	R
YFS R BLASTER					200	2003-2006	R
YFZ BANSHEE					350	1987-2009	R
YFM RN RAPTOR					660	2001-2005	R
YA30RID	220	58,8	4	4	76	8,5	-
YAMAHA							
YFS BLASTER					200	1988-2002	R
YFS R BLASTER					200	2003-2006	R
YFZ BANSHEE					350	1987-2009	R
YFM RN RAPTOR					660	2001-2005	R
YA31RID	245	58	4	4	76	8,5	-
YAMAHA							
YFM X WARRIOR					350	1987-2003	R
YA32FID	245	115,5	4	6	133	8,5	-
MBK							
SKYLINER					250	2000-2003	FR
SKYLINER ABS					250	2003	FR
YAMAHA							
YP MAJESTY (Rear Drum Model)					250	1996-1997	FR
YP MAJESTY DX					250	1998-1999	FR
YP MAJESTY DX/ABS					250	1999-2005	FR
YA32RI	230	116	5	3	136	8,5	-
MBK							
SKYLINER					250	2000-2003	R
SKYLINER ABS					250	2003	R
YAMAHA							
YP MAJESTY DX/ABS					250	2000-2005	R

CODICE P/N	Ø Esterno Ø Outer	Ø Interno Ø Inner	Spessore Tickness	Nr fori No. holes	Interasse fori Bolt pattern	Ø Fori Ø Holes	Campanatura Total height
YA32RID	230	116	5	3	136	8,5	-
MBK							
SKYLINER					250	2000-2003	R
SKYLINER ABS					250	2003	R
YAMAHA							
YP MAJESTY DX/ABS					250	2000-2005	R
YA34RI	220	105	4	5	125	10,5	-
YAMAHA							
YZF R6					600	2003-2014	R
YZF R1					1000	2004-2014	R
YA34RID	220	106	4	5	125	10,5	-
YAMAHA							
YZF R6					600	2003-2014	R
YZF R1					1000	2004-2014	R
YA39FI	220	87	4	6	102	6,5	-
YAMAHA							
TW (Rear Drum Model)					125	1999-2004	FL
SEROW					225	2005-2006	FL
TW					225	2005-2006	FL
TRICKER					250	2005-2006	FL
YA39FID	220	87	4	6	102	6,5	-
YAMAHA							
TW (Rear Drum Model)					125	1999-2004	FL
SEROW					225	2005-2006	FL
TW					225	2005-2006	FL
TRICKER					250	2005-2006	FL
YA43RID	200	51	3,5	4	67	8,5	-
YAMAHA							
YFM RAPTOR					250	2008-2009	R
YFM R RAPTOR					350	2004-2008	R
YFZ S					450	2004-2005	R
YA44RI	245	105	5	5	125	10,5	-
YAMAHA							
FZ6					600	2004-2008	R
FZ6 Fazer					600	2004-2008	R
FZ6 FAZER S2					600	2007-2008	R
FZ6 S2					600	2007-2008	R
MT03					660	2006-2011	R
FZ1					1000	2006-2014	R
FZ1 FAZER					1000	2006-2012	R
FZ1 FAZER ABS					1000	2007-2012	R

F > kit anteriore / front kit
R > kit posteriore / rear kit

KIT2D

CODICE P/N	Ø Esterno Ø Outer	Ø Interno Ø Inner	Spessore Tickness	Nr fori No. holes	Interasse fori Bolt pattern	Ø Fori Ø Holes	Campanatura Total height
YA44RID	245	105	5	5	125	10,5	-
YAMAHA							
FZ6					600	2004-2008	R
FZ6 Fazer					600	2004-2008	R
FZ6 FAZER S2					600	2007-2008	R
FZ6 S2					600	2007-2008	R
MT03					660	2006-2011	R
FZ1					1000	2006-2014	R
FZ1 FAZER					1000	2006-2012	R
FZ1 FAZER ABS					1000	2007-2012	R
YA45FLD	267	132	4	5	150	9	-
YAMAHA							
X-MAX YP R					125	2014	FL
YP G GRAND MAJESTY [japan]					250	2004-2005	FL
X-MAX YP					400	2013-2014	FL
X-MAX YP ABS					400	2014	FL
YP MAJESTY					400	2004-2013	FL
YP MAJESTY ABS					400	2007-2013	FL
XP T-MAX					500	2004-2007	FL
XP T-MAX					530	2012-2014	FL
XP T-MAX ABS					530	2012-2014	FL
YA46FLD	267	132	4	5	150	9	-
YAMAHA							
X-MAX YP R					125	2006-2013	FR
X-MAX YP R ABS					125	2011-2014	FR
X-MAX YP R					250	2005-2014	FR
X-MAX YP R ABS					250	2011-2014	FR
X-MAX YP R SPORT					250	2011-2012	FR
X-MAX YP					400	2013-2014	FR
X-MAX YP ABS					400	2014	FR
YP MAJESTY					400	2005-2013	FR
YP MAJESTY ABS					400	2007-2013	FR
XP T-MAX					500	2004-2007	FR
XP T-MAX					530	2012-2014	FR
XP T-MAX ABS					530	2012-2014	FR
YA46RID	240	92,5	5	4	114	8,5	-
YAMAHA							
X-MAX YP R					125	2006-2013	R
X-CITY					250	2008-2014	R
X-MAX YP R					250	2005-2013	R
X-MAX YP R SPORT					250	2011-2012	R
YA47FLD	298	132	4,2	6	150	8,5	-
YAMAHA							
WR X					125	2009-2013	FL
XT R					660	2004-2014	FL
XTZ TENERE					660	2008-2013	FL/FR

CODICE P/N	Ø Esterno Ø Outer	Ø Interno Ø Inner	Spessore Tickness	Nr fori No. holes	Interasse fori Bolt pattern	Ø Fori Ø Holes	Campanatura Total height
YA47RID	245	115,5	5	6	133	8,5	-
YAMAHA							
XT R					660	2004-2014	R
XT X					660	2004-2014	R
XTZ TENERE					660	2008-2013	R
YA48RI	268	132	5	3	150	8,5	-
YAMAHA							
YP G GRAND MAJESTY [japan]					250	2004-2005	R
YP MAJESTY					400	2004-2013	R
YP MAJESTY ABS					400	2007-2013	R
YA48RID	268	132	5	3	150	8,5	-
YAMAHA							
YP G GRAND MAJESTY [japan]					250	2004-2005	R
YP MAJESTY					400	2004-2013	R
YP MAJESTY ABS					400	2007-2013	R
YA51RID	200	51,5	3,5	4	71	10,5	-
YAMAHA							
YFZ S					450	2006-2009	R
YFM RN RAPTOR					700	2006-2009	R
YA52RID	245	115	4	6	133	6,5	-
YAMAHA							
WR					125	2002-2007	R
YZ					125	2002-2015	R
WR					250	2002-2007	R
WR F					250	2002-2013	R
YZ					250	2002-2014	R
YZ F					250	2002-2015	R
WR F					426	2002	R
YZ F					426	2002	R
WR F					450	2003-2014	R
YZ F					450	2003-2015	R

KIT MINICROSS (DISCHI & PASTIGLIE) - MINICROSS KIT (DISKS & PADS)

Il kit è composto da:
coppia dischi W-FIX anteriori e posteriori + coppia di pastiglie anteriori e posteriori in mescola CM44.

The kit is composed by:
front and rear W-FIX disks + CM44 front and rear pads.

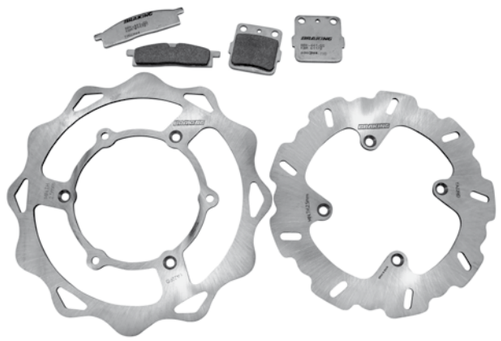

MODELLO MODEL	CC	ANNO YEAR	POSIZIONE POSITION
KS0004			
YAMAHA			
YZ	80	1993-2001	F-R
YZ	85	2002-2015	F-R
KS0005			
SUZUKI			
RM	85	2005-2011	F-R
KS0006			
KAWASAKI			
KX	65	2000-2015	F-R
SUZUKI			
RM	65	2003-2005	F-R
KS0007			
KAWASAKI			
KX	80	1997-1999	F-R
KX	85	2000-2015	F-R
KX	100	2005-2015	F-R
KS0008			
KTM			
SX	85	2003-2010	F-R
XC	85	2007-2009	F-R
SX	105	2004-2008	F-R
XC	105	2008	F-R
KS0009			
KTM			
SX	65	2009-2014	F-R
KS0010			
HONDA			
CRF R	150	2007-2013	F-R
CRF RB	150	2007-2013	F-R

F > kit anteriore / front kit
R > kit posteriore / rear kit

KIT MAGGIORAZIONE OFFROAD W-FLO - OFFROAD W-FLO OVERSIZE KIT

Il kit è composto da:
disco Wave® flottante + staffa per pinza originale + coppia di pastiglie in mescola sinterizzata CM44.

The kit is composed by:
floating Wave® disc + bracket for OEM caliper + set of syntered CM44 pads.

OKWL01 (Disc/Disco: Ø 270mm)

MODELLO MODEL	CC	ANNO YEAR	POSIZIONE POSITION
HONDA			
CR E	125	2004-2008	F
CR R	125	2004-2008	F
CR E	250	2004-2008	F
CR R	250	2004-2008	F
CRF R	250	2004-2014	F
CRF X	250	2004-2009	F
CRF X	250	2012	F
CRF R	450	2004-2014	F
CRF X	450	2004-2009	F
CRF X	450	2012	F
HONDA-HM			
CRE F	250	2004-2009	F
CRE X	250	2004-2009	F
CRF R	250	2008-2013	F
CRF R	450	2004-2014	F

OKWL03 (Disc/Disco: Ø 270mm)

MODELLO MODEL	CC	ANNO YEAR	POSIZIONE POSITION
HUSABERG			
FE	400	2000-2003	F
FE E	400	2001-2003	F
FC	470	2001-2002	F
FC	501	1999-2003	F
FE E	501	1999-2004	F
FE S	501	1999-2004	F
FC	550	2001-2005	F
FE E	550	2004-2008	F
FC	600	1999-2003	F
FE E	600	1999-2002	F
FE E	650	2001-2008	F
FX E	650	2001-2005	F
KTM			
EXC	125	2000-2009	F
GS	125	1993-1997	F
MX	125	1992	F
SX	125	1993-1997	F
SX	125	2000-2008	F
SXS	125	2000-2008	F
SX	144	2007-2008	F
EXC	200	2000-2009	F
MXC	200	1998-2003	F
SX	200	2003-2008	F
XC W	200	2006-2009	F
EXC	250	2000-2009	F
EXC F	250	2003-2009	F
EXC G	250	2004-2009	F
GS	250	1993-1997	F
MX	250	1992	F
MXC	250	1998-2003	F
SX	250	1993	F
SX	250	2000-2008	F
SX F	250	2003-2008	F
SXS	250	2003-2008	F
SXS F	250	2006-2008	F
XC F	250	2007-2009	F
XC W	250	2006-2009	F
EXC	300	2000-2009	F
GS	300	1993-1996	F
MX	300	1992	F
MXC	300	1998-2005	F
SX	300	1993	F
SX	300	2000-2003	F
XC	300	2006-2009	F
XC W	300	2006-2009	F
GS	350	1993	F
EXC	380	2000-2002	F
SX	380	1998-2002	F
EXC	400	1994-2009	F
EXC G	400	2004-2006	F
SX	400	2000-2002	F
XC W	400	2007-2009	F
EXC	450	2003-2009	F
EXC R	450	2008-2009	F
MXC	450	2003-2006	F
SX F	450	2003-2008	F
SXS	450	2003-2008	F
SXS F	450	2003-2008	F
XC	450	2007-2009	F
XC F	450	2007-2009	F
XC G	450	2006	F
XC W	450	2007-2009	F
MX	500	1992	F
SX	500	1993-1995	F
SX F	505	2007-2008	F
XC F	505	2007-2009	F

MODELLO MODEL	CC	ANNO YEAR	POSIZIONE POSITION
EXC	520	2000-2002	F
MXC	520	2001-2002	F
SX	520	2000-2002	F
EXC	525	2003-2008	F
MXC	525	2003-2005	F
SX	525	2003-2006	F
XC	525	2006-2008	F
XC G	525	2006-2008	F
XC W	525	2006-2008	F
EXC R	530	2008-2009	F
SXC	540	1999-2000	F
SXS	540	2001-2006	F
GS	600	1993	F
LC4 SC SUPERCOMP	625	2002	F
SXC	625	2003-2008	F

OKWL04 (Disc/Disco: Ø 270mm)

MODELLO MODEL	CC	ANNO YEAR	POSIZIONE POSITION
KAWASAKI			
KX	125	2006-2008	F
KX	250	2006-2008	F
KX F	250	2006-2015	F
KLX R	450	2007-2014	F
KX F	450	2006-2015	F

OKWL06 (Disc/Disco: Ø 270mm)

MODELLO MODEL	CC	ANNO YEAR	POSIZIONE POSITION
SUZUKI			
RM	125	1996-2009	F
RM	250	1996-2012	F
DRZ E	400	2000-2008	F
DRZ S	400	2000-2009	F

OKWL07 (Disc/Disco: Ø 270mm)

MODELLO MODEL	CC	ANNO YEAR	POSIZIONE POSITION
YAMAHA			
WR	125	1998-2007	F
YZ	125	1998-2007	F
WR	250	1998-2001	F
WR	250	2003-2007	F
WR F	250	2003-2013	F
YZ	250	1998-2002	F
YZ F	250	2001-2006	F
WR F	400	1998-2000	F
YZ F	400	1998-2000	F
WR F	426	2001-2002	F
YZ F	426	2000-2002	F
WR F	450	2003-2014	F
YZ F	450	2003-2007	F

OKWL08 (Disc/Disco: Ø 270mm)

MODELLO MODEL	CC	ANNO YEAR	POSIZIONE POSITION
YAMAHA			
YZ	125	2008-2015	F
YZ	250	2008-2014	F
YZ F	250	2007-2015	F
YZ F	450	2008-2015	F

OKWL12 (Disc/Disco: Ø 270mm)

MODELLO MODEL	CC	ANNO YEAR	POSIZIONE POSITION
SUZUKI			
RMZ	250	2007-2015	F
RMX	450	2010-2012	F
RMZ	450	2005-2015	F

OKWL14 (Disc/Disco: Ø 270mm)

MODELLO MODEL	CC	ANNO YEAR	POSIZIONE POSITION
HUSABERG			
TE	125	2012-2014	F
FE	250	2013-2014	F
TE	250	2011-2014	F
TE	300	2011-2014	F
FE	350	2013-2014	F
FE	390	2010	F

MODELLO MODEL	CC	ANNO YEAR	POSIZIONE POSITION
FE	390	2012	F
FE	450	2009-2014	F
FX	450	2010	F
FE	510	2013-2014	F
FE	570	2010-2012	F
HUSQVARNA			
TC	125	2014-2015	F
TE	125	2014	F
FC	250	2014	F
FE	250	2014-2015	F
TC	250	2014	F
TE	250	2014	F
TE	300	2014-2015	F
FC	350	2014-2015	F
FE	350	2014	F
FC	450	2014-2015	F
FE	450	2014-2015	F
FE	510	2014	F
KTM			
EXC	125	2010-2015	F
EXC SIX DAYS	125	2009-2015	F
SX	125	2009-2015	F
SXS	125	2009-2010	F
SX	144	2009-2010	F
SX	150	2008-2015	F
EXC	200	2010-2015	F
SX	200	2009	F
EXC	250	2010-2014	F
EXC E	250	2015	F
EXC F	250	2010-2015	F
EXC F SIX DAYS	250	2009-2015	F
EXC SIX DAYS	250	2009-2015	F
SX	250	2009-2015	F
SX F	250	2009-2015	F
SXS	250	2009-2010	F
SXS F	250	2009	F
XC W	250	2010-2012	F
EXC	300	2010-2014	F
EXC E	300	2015	F
EXC SIX DAYS	300	2009-2015	F
XC W	300	2010-2012	F
EXC F	350	2010-2015	F
EXC F SIX DAYS	350	2011-2015	F
SX F	350	2011-2015	F
EXC	400	2010-2011	F
EXC	450	2010-2015	F
EXC SIX DAYS	450	2009-2015	F
SX F	450	2009-2015	F
SXS	450	2009-2010	F
SXS F	450	2009-2010	F
EXC	500	2011-2015	F
EXC SIX DAYS	500	2011-2015	F
SX F	505	2009	F
EXC	530	2010-2011	F
EXC SIX DAYS	530	2009	F

OKI64 (Disc/Disco: Ø 240mm)

MODELLO MODEL	CC	ANNO YEAR	POSIZIONE POSITION
HONDA			
CR R	80	1996-2002	F
CR R	85	2003-2007	F
CRF R	150	2007-2013	F
CRF RB	150	2007-2013	F

F > kit anteriore / front kit
R > kit posteriore / rear kit

KIT MAGGIORAZIONE BATFLY ALUMINIUM OFFROAD - OFFROAD BATFLY ALUMINIUM OVERSIZE KIT

Il kit è composto da:
disco Wave® serie BATFLY ALUMINIUM flottante + staffa per pinza originale + coppia di pastiglie in mescola sinterizzata CM46.

The kit is composed by:
floating Wave® disk BATFLY ALUMINIUM series + bracket for OEM caliper + set of syntered CM46 pads.

MODELLO MODEL	CC	ANNO YEAR	POSIZIONE POSITION
OKBY17 * (Disc/Disco: Ø 280mm)			
YAMAHA			
YZ	250	2009-2014	F
YZ F	250	2007-2015	F
YZ F	450	2008-2015	F

*** Il kit è composto da:**
disco Wave® flottante serie BATFLY CROSS 2013 + staffa per pinza originale + coppia di pastiglie in mescola sinterizzata CM46.

*** The kit is composed by:**
floating Wave® disk BATFLY CROSS 2013 series + bracket for OEM caliper + set of syntered CM46 pads.

MODELLO MODEL	CC	ANNO YEAR	POSIZIONE POSITION
OKBY18 (Disc/Disco: Ø 270mm)			
HONDA			
CR E	125	2004-2008	F
CR R	125	2004-2008	F
CR E	250	2004-2008	F
CR R	250	2004-2008	F
CRF R	250	2004-2014	F
CRF X	250	2004-2009	F
CRF X	250	2012	F
CRF R	450	2004-2014	F
CRF X	450	2004-2009	F
CRF X	450	2012	F
HONDA-HM			
CRE F	250	2004-2009	F
CRE X	250	2004-2009	F
CRF R	250	2008-2013	F
CRF R	450	2004-2014	F

MODELLO MODEL	CC	ANNO YEAR	POSIZIONE POSITION
OKBY19 (Disc/Disco: Ø 270mm)			
HUSABERG			
FE	400	2000-2003	F
FE E	400	2001-2003	F
FC	470	2001-2002	F
FC	501	1999-2003	F
FE E	501	1999-2004	F
FE S	501	1999-2004	F
FC	550	2001-2005	F
FE E	550	2004-2008	F
FC	600	1999-2003	F
FE E	600	1999-2002	F
FE E	650	2001-2008	F
FX E	650	2001-2005	F
KTM			
EXC	125	2000-2009	F
GS	125	1993-1997	F
MX	125	1992	F
SX	125	1993-1997	F
SX	125	2000-2008	F
SXS	125	2000-2008	F
SX	144	2007-2008	F
EXC	200	2000-2009	F
MXC	200	1998-2003	F
SX	200	2003-2008	F
XC W	200	2006-2009	F
EXC	250	2000-2009	F
EXC F	250	2003-2009	F
EXC G	250	2004-2009	F
GS	250	1994-1997	F
MX	250	1992	F
MXC	250	1998-2003	F
SX	250	1993	F
SX	250	2000-2008	F
SX F	250	2003-2008	F
SXS	250	2003-2008	F
SXS F	250	2006-2008	F
XC F	250	2007-2009	F
XC W	250	2006-2009	F
EXC	300	2000-2009	F
GS	300	1993-1996	F
MX	300	1992	F
MXC	300	1998-2005	F
SX	300	1993	F
SX	300	2000-2003	F
XC	300	2006-2009	F
XC W	300	2006-2009	F
GS	350	1993	F
EXC	380	2000-2002	F
SX	380	1998-2002	F
EXC	400	1994-2009	F
EXC G	400	2004-2006	F
SX	400	2000-2002	F
XC W	400	2007-2009	F
EXC	450	2003-2009	F
EXC R	450	2008-2009	F
MXC	450	2003-2006	F
SX F	450	2003-2008	F
SXS	450	2003-2008	F
SXS F	450	2003-2008	F
XC	450	2007-2009	F
XC F	450	2007-2009	F
XC G	450	2006	F
XC W	450	2007-2009	F
SX	500	1993-1995	F
SX F	505	2007-2008	F
XC F	505	2007-2009	F
EXC	520	2000-2002	F
MXC	520	2001-2002	F

MODELLO MODEL	CC	ANNO YEAR	POSIZIONE POSITION
SX	520	2000-2002	F
EXC	525	2003-2008	F
MXC	525	2003-2005	F
SX	525	2003-2006	F
XC	525	2006-2008	F
XC G	525	2006-2008	F
XC W	525	2006-2008	F
EXC R	530	2008-2009	F
SXC	540	1999-2000	F
SXS	540	2001-2006	F
GS	600	1993	F
LC4 SC SUPERCOMP	625	2002	F
SXC	625	2003-2008	F
OKBY20 (Disc/Disco: Ø 270mm)			
KAWASAKI			
KX	125	2003-2005	F
KX	250	2003-2005	F
KX F	250	2004-2005	F
SUZUKI			
RMZ	250	2004-2006	F
OKBY21 (Disc/Disco: Ø 270mm)			
KAWASAKI			
KX	125	2006-2008	F
KX	250	2006-2008	F
KX F	250	2006-2015	F
KLX R	450	2007-2014	F
KX F	450	2006-2015	F
OKBY22 (Disc/Disco: Ø 270mm)			
YAMAHA			
WR	125	1998-2007	F
YZ	125	1998-2007	F
WR	250	1998-2001	F
WR	250	2003-2007	F
WR F	250	2001-2013	F
YZ	250	1998-2007	F
YZ F	250	2001-2006	F
WR F	400	1998-2000	F
YZ F	400	1998-2000	F
WR F	426	2001-2002	F
YZ F	426	2000-2002	F
WR F	450	2003-2014	F
YZ F	450	2003-2007	F
OKBY23 (Disc/Disco: Ø 270mm)			
YAMAHA			
YZ	125	2008-2015	F
YZ	250	2008-2014	F
YZ F	250	2007-2015	F
YZ F	450	2008-2015	F
OKBY24 (Disc/Disco: Ø 270mm)			
SUZUKI			
RMZ	250	2007-2015	F
RMX	450	2010-2012	F
RMZ	450	2005-2015	F
OKBY25 (Disc/Disco: Ø 270mm)			
HUSABERG			
TE	125	2012-2014	F
FE	250	2013-2014	F
TE	250	2011-2014	F
TE	300	2011-2014	F
FE	350	2013-2014	F
FE	390	2010	F
FE	390	2012	F

MODELLO MODEL	CC	ANNO YEAR	POSIZIONE POSITION
FE	450	2009-2014	F
FX	450	2010	F
FE	510	2013-2014	F
FE	570	2010-2012	F
HUSQVARNA			
TC	125	2014-2015	F
TE	125	2014	F
FC	250	2014	F
FE	250	2014-2015	F
TC	250	2014	F
TE	250	2014	F
TE	300	2014-2015	F
FC	350	2014-2015	F
FE	350	2014	F
FC	450	2014-2015	F
FE	450	2014-2015	F
FE	510	2014	F
KTM			
EXC	125	2010-2015	F
EXC SIX DAYS	125	2009-2015	F
SX	125	2009-2015	F
SXS	125	2009-2010	F
SX	144	2009-2010	F
SX	150	2008-2015	F
EXC	200	2010-2015	F
SX	200	2009	F
EXC	250	2010-2014	F
EXC E	250	2015	F
EXC F	250	2010-2015	F
EXC F SIX DAYS	250	2009-2015	F
EXC SIX DAYS	250	2009-2015	F
SX	250	2009-2015	F
SX F	250	2009-2015	F
SXS	250	2009-2010	F
SXS F	250	2009	F
XC W	250	2010-2012	F
EXC	300	2010-2014	F
EXC E	300	2015	F
EXC SIX DAYS	300	2009-2015	F
XC W	300	2010-2012	F
EXC F	350	2010-2015	F
EXC F SIX DAYS	350	2011-2015	F
SX F	350	2011-2015	F
EXC	400	2010-2011	F
EXC	450	2010-2015	F
EXC SIX DAYS	450	2009-2015	F
SX F	450	2009-2015	F
SXS	450	2009-2010	F
SXS F	450	2009-2010	F
EXC	500	2011-2015	F
EXC SIX DAYS	500	2011-2015	F
SX F	505	2009	F
EXC	530	2010-2011	F
EXC SIX DAYS	530	2009	F
OKBY26 (Disc/Disco: Ø 270mm)			
HUSQVARNA			
CR	125	2005-2010	F
CR	125	2012	F
TE	125	2010-2013	F
WR	125	2006-2012	F
CR	250	2005-2011	F
TC	250	2007-2013	F
TXC	250	2011	F
WR	250	2005-2013	F
WR	300	2009-2013	F
TXC	310	2011	F
TC	450	2007-2010	F
TE	450	2007-2010	F
TC	510	2007-2009	F
TE	510	2006-2010	F

F > kit anteriore / front kit
R > kit posteriore / rear kit

KIT MAGGIORAZIONE S3 BATFLY - S3 BATFLY OVERSIZE KIT

Il kit è composto da:
disco Wave® serie S3 BATFLY CROSS semiflottante + staffa per pinza originale + coppia di pastiglie in mescola sinterizzata CM46

The kit is composed by:
semifloating Wave® disk S3 BATFLY CROSS series + bracket for OEM caliper + set of syntered CM46 pads.

MODELLO MODEL	CC	ANNO YEAR	POSIZIONE POSITION
OKS301 (Disc/Disco: Ø 260mm)			
HONDA			
CR E	125	2004-2008	F
CR R	125	2004-2008	F
CR E	250	2004-2008	F
CR R	250	2004-2008	F
CRF R	250	2004-2014	F
CRF X	250	2004-2009	F
CRF X	250	2012	F
CRF R	450	2004-2014	F
CRF X	450	2004-2009	F
CRF X	450	2012	F
HONDA-HM			
CRF R	250	2008-2013	F
CRF R	450	2004-2014	F
OKS302 (Disc/Disco: Ø 270mm)			
HONDA			
CR E	125	2004-2008	F
CR R	125	2004-2008	F
CR E	250	2004-2008	F
CR R	250	2004-2008	F
CRF R	250	2004-2014	F
CRF X	250	2004-2009	F
CRF X	250	2012	F
CRF R	450	2004-2014	F
CRF X	450	2004-2009	F
CRF X	450	2012	F
HONDA-HM			
CRE F	250	2004-2009	F
CRE X	250	2004-2009	F
CRF R	250	2008-2013	F
CRF R	450	2004-2014	F

MODELLO MODEL	CC	ANNO YEAR	POSIZIONE POSITION
OKS303 (Disc/Disco: Ø 270mm)			
HUSABERG			
FE	400	2000-2003	F
FE E	400	2001-2003	F
FC	470	2001-2002	F
FC	501	1999-2003	F
FE E	501	1999-2004	F
FE S	501	1999-2004	F
FC	550	2001-2005	F
FE E	550	2004-2008	F
FC	600	1999-2003	F
FE E	600	1999-2002	F
FE E	650	2001-2008	F
FX E	650	2001-2005	F
KTM			
EXC	125	2000-2009	F
GS	125	1993-1997	F
MX	125	1992	F
SX	125	1993-1997	F
SX	125	2000-2008	F
SXS	125	2000-2008	F
SX	144	2007-2008	F
EXC	200	2000-2009	F
MXC	200	1998-2003	F
SX	200	2003-2008	F
XC W	200	2006-2009	F
EXC	250	2000-2009	F
EXC F	250	2003-2009	F
EXC G	250	2004-2009	F
GS	250	1994-1997	F
MX	250	1992	F
MXC	250	1998-2003	F
SX	250	1993	F
SX	250	2000-2008	F
SX F	250	2003-2008	F
SXS	250	2003-2008	F
SXS F	250	2006-2008	F
XC F	250	2007-2009	F
XC W	250	2006-2009	F
EXC	300	2000-2009	F
GS	300	1993-1996	F
MX	300	1992	F
MXC	300	1998-2005	F
SX	300	1993	F
SX	300	2000-2003	F
XC	300	2006-2009	F
XC W	300	2006-2009	F
GS	350	1993	F
EXC	380	2000-2002	F
SX	380	1998-2002	F
EXC	400	1994-2009	F
EXC G	400	2004-2006	F
SX	400	2000-2002	F
XC W	400	2007-2009	F
EXC	450	2003-2009	F
EXC R	450	2008-2009	F
MXC	450	2003-2006	F
SX F	450	2003-2008	F
SXS	450	2003-2008	F
SXS F	450	2003-2008	F
XC	450	2007-2009	F
XC F	450	2007-2009	F
XC G	450	2006	F
XC W	450	2007-2009	F
SX	500	1993-1995	F
SX F	505	2007-2008	F
XC F	505	2007-2009	F
EXC	520	2000-2002	F
MXC	520	2001-2002	F
SX	520	2000-2002	F
EXC	525	2003-2008	F
MXC	525	2003-2005	F
SX	525	2003-2006	F
XC	525	2006-2008	F
XC G	525	2006-2008	F
XC W	525	2006-2008	F
EXC R	530	2008-2009	F
SXC	540	1999-2000	F
SXS	540	2001-2006	F
GS	600	1993	F
LC4 SC SUPERCOMP	625	2002	F
SXC	625	2003-2008	F
OKS304 (Disc/Disco: Ø 270mm)			
KAWASAKI			
KX	125	2003-2005	F
KX	250	2003-2005	F
KX F	250	2004-2005	F
SUZUKI			
RMZ	250	2004-2006	F
OKS305 (Disc/Disco: Ø 270mm)			
KAWASAKI			
KX	125	2006-2008	F
KX	250	2006-2008	F
KX F	250	2006-2015	F
KLX R	450	2007-2014	F
KX F	450	2006-2015	F
OKS306 (Disc/Disco: Ø 270mm)			
YAMAHA			
WR	125	1998-2007	F
YZ	125	1998-2007	F
WR	250	1998-2001	F
WR	250	2003-2007	F
WR F	250	2001-2013	F
YZ	250	1998-2007	F
YZ F	250	2001-2006	F
WR F	400	1998-2000	F
YZ F	400	1998-2000	F
WR F	426	2001-2002	F
YZ F	426	2000-2002	F
WR F	450	2003-2014	F
YZ F	450	2003-2007	F
OKS307 (Disc/Disco: Ø 270mm)			
YAMAHA			
YZ	125	2008-2015	F
YZ	250	2008-2014	F
YZ F	250	2007-2015	F
YZ F	450	2008-2015	F
OKS308 (Disc/Disco: Ø 270mm)			
SUZUKI			
RMZ	250	2007-2015	F
RMX	450	2010-2012	F
RMZ	450	2005-2015	F
OKS309 (Disc/Disco: Ø 270mm)			
HUSABERG			
TE	125	2012-2014	F
FE	250	2013-2014	F
TE	250	2011-2014	F
TE	300	2011-2014	F
FE	350	2013-2014	F
FE	390	2010	F
FE	390	2012	F
FE	450	2009-2014	F
FX	450	2010	F
FE	510	2013-2014	F
FE	570	2010-2012	F
HUSQVARNA			
TC	125	2014-2015	F
TE	125	2014	F
FC	250	2014	F
FE	250	2014-2015	F
TC	250	2014	F
TE	250	2014	F
TE	300	2014-2015	F
FC	350	2014-2015	F
FE	350	2014	F
FC	450	2014-2015	F
FE	450	2014-2015	F
FE	510	2014	F
KTM			
EXC	125	2010-2015	F
EXC SIX DAYS	125	2009-2015	F
SX	125	2009-2015	F
SXS	125	2009-2010	F
SX	144	2009-2010	F
SX	150	2008-2015	F
EXC	200	2010-2015	F
SX	200	2009	F
EXC	250	2010-2014	F
EXC E	250	2015	F
EXC F	250	2010-2015	F
EXC F SIX DAYS	250	2009-2015	F
EXC SIX DAYS	250	2009-2015	F
SX	250	2009-2015	F
SX F	250	2009-2015	F
SXS	250	2009-2010	F
SXS F	250	2009	F
XC W	250	2010-2012	F
EXC	300	2010-2014	F
EXC E	300	2015	F
EXC SIX DAYS	300	2009-2015	F
XC W	300	2010-2012	F
EXC F	350	2010-2015	F
EXC F SIX DAYS	350	2011-2015	F
SX F	350	2011-2015	F
EXC	400	2010-2011	F
EXC	450	2010-2015	F
EXC SIX DAYS	450	2009-2015	F
SX F	450	2009-2015	F
SXS	450	2009-2010	F
SXS F	450	2009-2010	F
EXC	500	2011-2015	F
EXC SIX DAYS	500	2011-2015	F
SX F	505	2009	F
EXC	530	2010-2011	F
EXC SIX DAYS	530	2009	F
OKS310 (Disc/Disco: Ø 270mm)			
HUSQVARNA			
CR	125	2005-2010	F
CR	125	2012	F
TE	125	2010-2013	F
WR	125	2006-2012	F
CR	250	2005-2011	F
TC	250	2007-2013	F
TXC	250	2011	F
WR	250	2005-2013	F
WR	300	2009-2013	F
TXC	310	2011	F
TC	450	2007-2010	F
TE	450	2007-2010	F
TC	510	2007-2009	F
TE	510	2006-2010	F

F > kit anteriore / front kit
R > kit posteriore / rear kit

KIT MAGGIORAZIONE STRADALE - ONROAD OVERSIZE KIT

il kit è composto da:
coppia dischi Racing Wave® serie SK2 + distanziali in alluminio per pinze radiali originali + viti per montaggio pinze con distanziali.

The kit is composed by:
set of Racing Wave® disk SK2 series + aluminium spacers for originals radial callipers + screw for spaced calipers fitting.

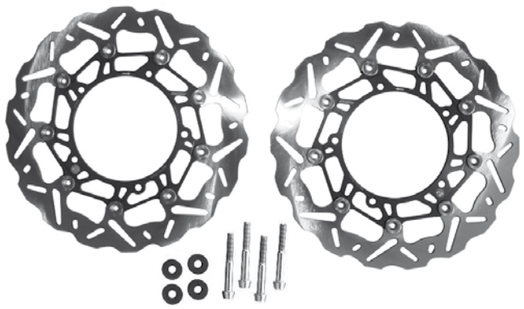

MODELLO MODEL	CC	ANNO YEAR	POSIZIONE POSITION
OKWK01			
KAWASAKI			
ZX-10R	1000	2008-2015	**F**
ZX-10R ABS	1000	2011-2015	**F**
OKWK02			
SUZUKI			
GSX R	600	2008-2010	**F**
GSX R	750	2008-2010	**F**
OKWK03			
SUZUKI			
B-KING	1300	2008-2010	**F**
GSX R HAYABUSA	1300	2008-2012	**F**
OKWK04			
SUZUKI			
GSX R	600	2004-2005	**F**
GSX R	750	2004-2005	**F**
GSX R	1000	2003-2004	**F**
OKWK05			
KAWASAKI			
ZX6R NINJA	600	2007-2013	**F**
ZX6RR NINJA	600	2005-2006	**F**
ZX6R NINJA	636	2005-2006	**F**
Z 750 R	750	2011-2012	**F**
Z 750 R-ABS	750	2011-2012	**F**
Z 1000	1000	2007-2009	**F**
Z 1000-ABS	1000	2007-2013	**F**
ZX-10R	1000	2004-2007	**F**
OKWK06			
SUZUKI			
GSX R	600	2006-2007	**F**
GSX R	750	2006-2007	**F**
OKWK07			
YAMAHA			
YZF R6	600	2005-2011	**F**
YZF R1	1000	2007-2011	**F**
OKWK08			
HONDA			
CBR RR	600	2005-2014	**F**
CBR RR-ABS	600	2009-2014	**F**
CB 1000 R	1000	2008-2013	**F**
CBR RR	1000	2004-2007	**F**

KIT MAGGIORAZIONE POSTERIORE CROSS - REAR CROSS OVERSIZE KIT

Kit maggiorazione posteriore cross - Ø240

Rear oversize kit - Ø240

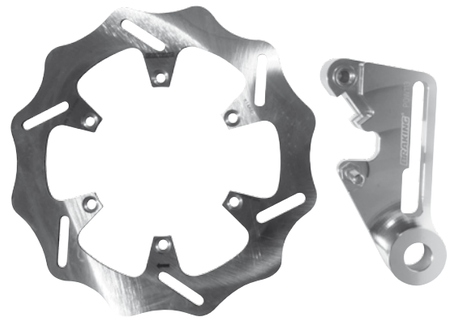

MODELLO MODEL	CC	ANNO YEAR	POSIZIONE POSITION
OKI80 (Disc/Disco: Ø 240mm)			
HUSQVARNA			
TC	125	2014-2015	**R**
TE	125	2014	**R**
FC	250	2014	**R**
TC	250	2014	**R**
TE	250	2014	**R**
TE	300	2014-2015	**R**
FC	350	2014-2015	**R**
FC	450	2014-2015	**R**
KTM			
EXC	125	2004-2015	**R**
EXC SIX DAYS	125	2009-2015	**R**
SX	125	2004-2012	**R**
SXS	125	2004-2010	**R**
SX	144	2007-2010	**R**
SX	150	2011-2012	**R**
EXC	200	2003-2015	**R**
SX	200	2003-2009	**R**
XC W	200	2006-2009	**R**
EXC	250	2004-2014	**R**
EXC E	250	2015	**R**
EXC F	250	2004-2015	**R**
EXC F SIX DAYS	250	2009-2015	**R**
EXC G	250	2004-2009	**R**
EXC SIX DAYS	250	2009-2015	**R**
SX	250	2003-2012	**R**
SX F	250	2003-2012	**R**
SXS	250	2003-2010	**R**
SXS F	250	2006-2009	**R**
XC F	250	2007-2009	**R**
XC W	250	2006-2012	**R**
EXC	300	2004-2014	**R**
EXC E	300	2015	**R**
EXC SIX DAYS	300	2009-2015	**R**
MXC	300	2004-2005	**R**
XC	300	2006-2012	**R**
XC W	300	2006-2012	**R**
EXC F	350	2010-2015	**R**
EXC F SIX DAYS	350	2011-2015	**R**
SX F	350	2011-2012	**R**
EXC	400	2004-2011	**R**
EXC G	400	2004-2006	**R**
XC W	400	2007-2009	**R**
EXC	450	2004-2015	**R**
EXC R	450	2008-2009	**R**
EXC SIX DAYS	450	2009-2015	**R**
MXC	450	2004-2006	**R**
SMR	450	2004-2013	**R**
SX F	450	2003-2012	**R**
SXS	450	2003-2010	**R**
SXS F	450	2003-2010	**R**
XC	450	2007-2009	**R**
XC F	450	2007-2009	**R**
XC G	450	2006	**R**
XC W	450	2007-2009	**R**
EXC	500	2011-2015	**R**
EXC SIX DAYS	500	2011-2015	**R**
SX F	505	2007-2009	**R**
XC F	505	2007-2009	**R**
EXC	525	2004-2008	**R**
MXC	525	2004-2005	**R**
SMR	525	2004-2005	**R**
SX	525	2004-2006	**R**
XC	525	2006-2008	**R**
XC G	525	2006-2008	**R**
XC W	525	2006-2008	**R**
EXC	530	2010-2011	**R**
EXC R	530	2008-2009	**R**
EXC SIX DAYS	530	2009	**R**
SXS	540	2003-2006	**R**
SMR	560	2006-2008	**R**
OKI89 (Disc/Disco: Ø 240mm)			
KTM			
SX	125	2013-2014	**R**
SX	125	2015	**R**
SX	150	2013-2015	**R**
SX	250	2013-2015	**R**
SX F	250	2013-2015	**R**
SX F	350	2013-2015	**R**
SX F	450	2013-2015	**R**

KIT MAGGIORAZIONE SCOOTER - SCOOTER OVERSIZE KIT

Il kit è composta da:
disco Wave® flottante + staffa distanziatrice per pinza originale + coppia di pastiglie a mescola semimetallica SM1.

The kit is composed by:
floating Wave® disc + bracket for original caliper + set of semimetallic SM1 pads.

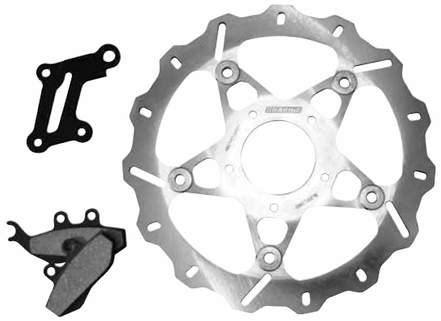

MODELLO MODEL	CC	ANNO YEAR	POSIZIONE POSITION
OKI87 (Disc/Disco: Ø 250mm)			
GILERA			
RUNNER FX	125	2000-2005	**R**
RUNNER FX SP (Grimeca)	125	2002-2005	**R**
RUNNER FXR SP 2t (Grimeca)	180	1999-2005	**R**
RUNNER VXR 4t (Grimeca)	180	2001-2005	**R**

KIT RICAMBIO DISCHI - DISKS REPLACEMENT KIT

KR0166
- Kit ricambio distanziali e viti per OKI43 - OKI44 - OKI81 - OKWK04
- Replacement kit spacer and screw for OKI43 - OKI44 - OKI81 - OKI84 - OKWK04 - OKWK08

KR0167
- Kit ricambio distanziali e viti per OKI82 - OKI83 - OKSK01 - OKSK02 - OKSK03 - OKWK01 - OKWK02 - OKWK03 - OKWK06 - OKWK07
- Replacement kit spacer and screw for OKI82 - OKI83 - OKSK01 - OKSK02 - OKSK03 - OKWK01 - OKWK02 - OKWK03 - OKWK06 - OKWK07

KR0168
- Kit ricambio componenti dischi BMW BW01FI - BW02FI
- Replacement kit components for BMW disks BW01FI - BW02FI

KR0169
- Kit ricambio componenti dischi BMW RH7005 - WK109L/R - SK109L/R
- Replacement kit components for BMW disks RH7005 - WK109L/R - SK109L/R

KR0170
- Kit ricambio componenti dischi BMW RH7001 - RH7002 - WH7001 - WH7002
- Replacement kit components for BMW disks RH7001 - RH7002 - WH7001 - WH7002

KR0171
- Kit ricambio componenti dischi BMW RH7003 - RH7004 - WH7003 - WH7004
- Replacement kit components for BMW disks RH7003 - RH7004 - WH7003 - WH7004

KR0182
- Kit ricambio distanziali e viti per OKI47 - OKI84 - OKWK08
- Replacement kit spacer and screw for OKI47 - OKI84 - OKWK08

KR0184
- Kit ricambio distanziali e viti per OKWK05
- Replacement kit spacer and screw for OKWK05

Tabella Dischi / Disk Table

CODICE DISCO P/N	Ø ESTERNO OUTER Ø	Ø INTERNO INNER Ø	SPESSORE THICKNESS	N° FORI NR of HOLES	INTERASSE FORI BOLT PATTERN	Ø FORI Ø HOLES	CAMPANATURA TOTAL HEIGHT
MA01FI	155	39,00	3,00	5	60,00	6,50	-
YA12FI	155	41,00	3,50	3	66,00	10,50	-
YA12FID	155	43,00	3,50	3	66,00	10,50	-
H017FI	160	58,00	3,20	3	80,00	10,50	-
H017FID	160	59,00	3,20	3	80,00	10,50	-
KT06RID	160	45,50	3,00	4	60,00	6,50	-
SZ43FID	160	48,50	3,00	3	68,00	10,50	-
YA30FID	160	48,50	3,50	4	66,00	10,50	-
YA30FI	161	48,00	3,50	4	66,00	10,50	-
SZ11FI	162	34,00	4,00	3	56,00	10,50	-
SZ27FI	162	48,00	3,50	3	67,50	10,50	-
WF9101	163	51,00	3,50	4	72,00	10,50	-
SZ16FI	170	48,00	3,50	3	68,00	10,50	-
SZ16FID	170	48,50	3,50	3	68,00	10,50	-
H041FID	174	53,50	3,00	3	72,00	10,50	-
GL06RI	175	73,00	4,00	5	86,00	6,50	-
GL06RID	175	73,00	4,00	5	86,00	6,50	-
PL04FID	178	64,50	4,00	4	82,50	8,60	-
KW32RID	179	79,50	3,00	4	95,00	9,50	-
KM01FI	180	58,50	3,80	3	80,00	10,50	-
KM01FID	180	58,50	3,80	3	80,00	10,50	-
MB02FI	180	48,00	3,50	4	66,00	10,50	-
MB02FID	180	48,50	3,50	4	66,00	10,50	-
PE02FI	180	58,00	3,50	3	80,00	11,50	-
PE02FID	180	58,50	3,50	3	80,00	11,50	-
KW18RID	184	84,00	3,00	4	100,00	9,50	-
SZ26RID	184	85,00	3,50	4	100,00	6,50	-
AP11FI	190	58,00	3,80	3	80,00	8,50	-
AP11FID	190	58,00	3,80	3	80,00	8,50	-
AP21RI	190	70,00	4,50	3	89,50	8,50	-
AP21RID	190	70,00	4,50	3	89,50	8,50	-
H006RID	190	80,50	4,00	4	94,00	6,50	-
H020FI	190	72,00	5,00	4	94,00	10,50	-
H020FID	190	72,50	5,00	4	94,00	10,50	-
H032FI	190	58,00	3,20	3	80,00	10,50	-
H032FID	190	58,50	3,80	3	80,00	10,50	-
H034RI	190	72,00	3,50	4	94,00	10,50	-
H053RID	190	72,50	4,00	3	90,00	10,50	-
PE01FI	190	58,00	3,80	3	80,00	8,50	-
PE01FID	190	58,50	3,80	3	80,00	8,50	-
RF8509	190	63,00	5,00	3	80,00	8,50	-
SZ43RID	190	78,50	3,80	3	98,00	10,50	-
WF8510	190	58,00	4,00	4	78,00	10.5	-
YA22RID	190	85,00	3,00	4	100,00	6,50	-
PL04RID	196	76,50	4,00	4	101,50	8,50	-
KM04RI	200	58,50	4,00	5	80,00	0,00	-
KM04RID	200	58,50	4,00	5	80,00	10,50	-
KT06FID	200	89,00	3,00	3	104,00	6,50	-
KT07RID	200	110,00	3,50	4	125,00	6,20	-
MA04FI	200	58,00	3,00	3	80,00	8,50	-
MA04FID	200	58,50	3,00	3	80,00	8,50	-
PI01FI	200	97,00	4,00	5	108,50	6,50	-
PI01FID	200	97,00	4,00	5	108,50	6,50	-
RF8131	200	58,50	4,00	3	80,00	10,50	-
RF8514	200	89,50	4,00	5	110,00	10,50	-
RF8517	200	73,00	4,00	3	95,00	10,50	-
SZ26FID	200	100,50	3,50	3	120,00	6,50	-
SZ38RID	200	84,50	3,00	4	100,00	6,50	-
WF8503	200	73,00	4,00	3	95,00	10,50	-
WF8507	200	89,50	4,00	5	110,00	10,55	-
WF9501	200	70,00	3,50	4	90,00	10,50	-
YA43RID	200	51,00	3,50	4	67,00	8,50	-
YA51RID	200	51,50	3,50	4	71,00	10,50	-
MV01RID	210	108,00	5,00	4	124,70	7,50	-
SZ24RI	210	109,00	5,00	5	132,00	10,50	-
SZ24RID	210	109,00	5,00	5	132,00	10,50	-
SZ42RI	210	89,50	5,00	5	110,00	10,50	-
SZ42RID	210	89,50	5,00	5	110,00	10,50	-
WF4509	210	109,00	4,00	4	125,00	6,20	-
WF7527	218	58,00	3.5	6	80,00	6.5	-
AP08RI	220	102,00	4,00	5	120,00	8,50	-
AP08RID	220	102,50	5,00	5	120,00	8,50	-
AP13RI	220	110,00	4,00	6	125,00	6,50	-
AP13RID	220	110,50	4,00	6	125,00	6,50	-

Tabella Dischi / Disk Table

CODICE DISCO P/N	Ø ESTERNO OUTER Ø	Ø INTERNO INNER Ø	SPESSORE THICKNESS	N° FORI NR of HOLES	INTERASSE FORI BOLT PATTERN	Ø FORI Ø HOLES	CAMPANATURA TOTAL HEIGHT
AP16FI	220	60,00	4,00	5	80,00	8,50	-
AP16FID	220	60,00	4,00	5	80,00	8,50	-
BY4505	220	110,00	4,00	6	125,00	6,50	-
DC02RI	220	108,00	5,00	4	125,00	8,50	-
DC02RID	220	108,50	5,00	4	125,00	8,50	-
GL06FI	220	58,00	3,00	5	80,00	6,50	-
GL06FID	220	58,50	3,00	5	80,00	6,50	-
HO02RI	220	122,00	4,00	4	140,00	10,50	-
HO03RI	220	105,00	4,00	4	125,00	6,50	-
HO09RI	220	105,00	4,00	4	125,00	10,50	-
HO09RID	220	105,50	4,00	4	125,00	10,50	-
HO14FI	220	89,00	3,00	3	110,00	10,50	-
HO15RI	220	88,00	4,00	3	110,00	10,50	-
HO22RI	220	105,00	5,00	4	125,00	10,50	-
HO22RID	220	105,50	5,00	4	125,00	10,50	-
HO24FID	220	88,00	3,00	4	106,00	6,50	-
HO34FI	220	104,00	4,00	3	124,00	10,50	-
HO40RI	220	58,00	4,00	3	80,00	8,50	-
HO40RID	220	59,00	4,00	3	80,00	8,50	-
HO47RID	220	105,50	4,00	4	125,00	10,50	-
HO49FI	220	105,00	3,50	4	125,00	10,50	-
HO49FID	220	105,50	4,00	4	125,00	10,50	-
HO50RID	220	105,50	5,00	4	125,00	10,50	-
HU09RID	220	112,50	4,10	4	130,00	9,50	-
KM04FI	220	58,50	4,00	5	80,00	0,00	-
KM04FID	220	58,50	4,00	5	80,00	10,50	-
KT07FID	220	95,00	3,00	4	110,00	6,20	-
KT11RI	220	110,00	4,00	6	125,00	6,50	-
KT11RID	220	110,00	4,00	6	125,00	6,50	-
KW01RID	220	101,00	4,50	6	116,00	6,50	-
KW04RID	220	100,30	4,50	6	116,00	10,50	-
KW18FID	220	97,00	3,00	6	112,00	9,50	-
KW30RI	220	100,00	4,00	4	120,00	10,50	-
KW30RID	220	100,50	4,50	4	120,00	10,50	-
MB03FI	220	54,00	4,00	4	76,50	8,50	-
MB03FID	220	55,00	4,00	4	76,50	8,50	-
RF7519	220	119,00	5,00	5	135,60	6,60	-
RF7526	220	102,00	4,00	5	120,00	8,50	-
RF7528	220	102,50	5,00	5	120,00	8,50	-
RF7530	220	87,50	5,00	4	105,00	10,50	-
RF8119	220	105,00	4,00	6	120,00	6,50	-
RF8121	220	89,00	4,00	3	110,00	10,50	-
RF8123	220	100,00	4,00	3	120,00	8,50	-
RF8125	220	100,00	4,00	5	120,00	11,00	-
RF8132	220	89,50	4,00	5	110,00	10,50	-
RF8133	220	105,00	4,00	5	120,00	6,50	-
RF8134	220	58,00	4,00	4	78,00	10,50	-
RF8508	220	64,50	4,00	4	86,00	10,50	-
RF8511	220	96,00	4,00	5	115,00	6,50	-
RF8516	220	110,00	5,00	5	131,50	10,50	-
SZ01RID	220	118,00	4,00	6	134,00	6,50	-
SZ05RI	220	118,00	4,00	4	142,00	8,50	-
SZ22RI	220	89,00	5,00	5	110,00	10,50	-
SZ22RID	220	89,50	5,00	5	110,00	10,50	-
SZ27RI	220	50,00	4,00	3	70,00	8,50	-
WF4505	220	110,00	4,00	6	125,00	6,50	-
WF4510	220	112,50	4,10	4	130,00	9,50	-
WF7503	220	100,00	4,00	3	120,00	10,50	-
WF7504	220	88,90	5,00	5	108,00	9,60	-
WF7508	220	119,00	5,00	5	135,60	6,60	-
WF7512	220	102,50	5,00	5	120,00	8,50	-
WF7518	220	108,00	5,00	4	125,00	8,50	-
WF7519	220	85,00	4,00	4	100,00	10,50	-
WF7522	220	105,50	5,00	4	125,00	10,50	-
WF8103	220	105,00	4,00	6	120,00	6,50	-
WF8104	220	89,00	4,00	3	110,00	10,50	-
WF8111	220	58,00	4,00	4	78,00	10,50	-
WF8112	220	89,50	4,00	5	110,00	10,50	-
WF8114	220	58,00	4,00	4	78,00	10.5	-
WF8502	220	110,00	5,00	5	131,50	10,50	-
YA01RI	220	115,00	4,00	6	133,00	6,50	-
YA01RID	220	115,50	4,00	6	133,00	6,50	-
YA02RI	220	86,00	4,50	6	102,00	6,50	-
YA22FID	220	100,50	3,00	6	120,00	6,50	-

Tabella Dischi / Disk Table

CODICE DISCO P/N	Ø ESTERNO OUTER Ø	Ø INTERNO INNER Ø	SPESSORE THICKNESS	N° FORI NR of HOLES	INTERASSE FORI BOLT PATTERN	Ø FORI Ø HOLES	CAMPANATURA TOTAL HEIGHT
YA24RI	220	115,00	4,00	6	133,00	8,50	-
YA24RID	220	116,00	5,00	6	133,00	8,50	-
YA30RI	220	58,30	4,00	4	76,00	8,50	-
YA30RID	220	58,80	4,00	4	76,00	8,50	-
YA34RI	220	105,00	4,00	5	125,00	10,50	-
YA34RID	220	106,00	4,00	5	125,00	10,50	-
YA39FI	220	87,00	4,00	6	102,00	6,50	-
YA39FID	220	87,00	4,00	6	102,00	6,50	-
RF8129	226	58,00	3,50	3	80,00	10,50	-
RF8142	226	59,00	4,00	5	90,00	10.5	-
RF8515	226	113,00	5,00	5	127,00	6,50	-
RF8520	226	128,00	4.5	5	140,00	6.5	-
WF8116	226	59,00	4,00	5	90,00	10.5	-
WF8504	226	113,00	5,00	5	127,00	6,50	-
WF8508	226	128,00	4.5	5	140,00	6.5	-
KW09RI	230	82,00	4,00	5	104,00	10,50	-
KW16RI	230	120,00	4,00	6	136,00	10,50	-
KW19RI	230	100,30	4,00	6	116,00	10,50	-
KW34RID	230	100,50	5,00	4	120,00	10,50	-
RF7540	230	102,00	4,00	5	120,00	8,50	-
WF7509	230	102,00	4,00	5	120,00	8,50	-
WF7514	230	104,00	4,00	6	124,00	10,50	-
YA06FI	230	85,00	3,00	6	102,00	6,50	-
YA06FID	230	85,50	3,00	6	102,00	6,50	-
YA23RI	230	84,00	5,00	3	102,00	8,50	-
YA23RID	230	85,50	5,00	3	102,00	8,50	-
YA32RI	230	116,00	5,00	3	136,00	8,50	-
YA32RID	230	116,00	5,00	3	136,00	8,50	-
AP22RID	240	102,00	4,00	5	120,00	10,50	-
BL01RI	240	105,00	4,50	4	125,00	10,50	-
BL01RID	240	105,50	4,50	4	125,00	10,50	-
BL02RID	240	70,40	5,00	6	101,70	8,00	-
BW05RI	240	110,00	5,00	6	124,00	6,50	-
BW05RID	240	110,00	5,00	6	124,00	6,50	-
BY4501	240	121,50	4,00	4	140,00	6,50	-
BY4502	240	116,00	4,00	4	133,00	10,50	-
BY4503	240	122,00	4,00	4	140,00	10,50	-
BY4504	240	112,50	4,00	4	130,00	9,50	-
DC04RI	240	107,50	4,00	5	125,00	8,50	-
DC04RID	240	107,50	5,00	5	125,00	8,50	-
GL01RID	240	125,00	4,00	5	140,00	6,50	-
HO05RI	240	105,00	5,00	4	125,00	10,50	-
HO05RID	240	105,50	5,00	4	125,00	10,50	-
HO07FI	240	114,00	4,00	6	134,00	10,50	-
HO09FI	240	118,00	4,00	4	134,00	6,50	-
HO09FID	240	118,50	4,00	4	134,00	6,50	-
HO13FI	240	118,00	3,00	4	134,00	6,50	-
HO13RID	240	106,00	4,00	4	125,00	6,50	-
HO21RID	240	105,50	5,00	4	125,00	10,50	-
HO25FID	240	102,00	3,00	6	117,00	6,50	-
HO25RID	240	122,50	4,50	4	140,00	10,50	-
HO50FID	240	105,50	4,00	4	125,00	10,50	-
HO55RID	240	116,50	5,00	4	135,00	10,50	-
HO60RID	240	121,50	4,00	4	140,00	6,50	-
KM05RI	240	125,50	5,00	5	150,00	10,50	-
KM05RID	240	125,50	5,00	5	150,00	10,50	-
KT09RID	240	107,50	5,00	5	130,00	8,50	-
KT10RID	240	111,00	4,00	6	125,00	6,50	-
KW15RID	240	100,50	4,50	4	120,00	10,50	-
KW41RID	240	116,00	4,00	4	133,00	10,50	-
MA03FI	240	90,00	4,00	6	101,00	6,50	-
MB04RID	240	92,50	5,00	4	114,00	8,50	-
PI03FI	240	125,20	5,00	5	140,00	6,50	-
PI03FID	240	125,50	5,00	5	140,00	6,50	-
RF7529	240	70,40	5,00	6	101,70	8,00	-
RF7531	240	116,50	5,00	4	135,00	10,50	-
RF7535	240	120,50	5,00	5	141,00	10,50	-
RF7544	240	107,50	5,00	5	130,00	8,50	-
RF7545	240	110,00	5,00	6	125,00	6,50	-
RF7546	240	118,00	5,00	5	136,00	10.5	-
RF7548	240	102.5	5,00	5	120,00	8.5	-
RF8114	240	105,50	4,00	4	125,00	10,50	-
RF8124	240	89,00	4,50	3	110,00	10,50	-
RF8126	240	105,00	4,00	5	120,00	6,50	-

Tabella Dischi / Disk Table

CODICE DISCO P/N	Ø ESTERNO OUTER Ø	Ø INTERNO INNER Ø	SPESSORE THICKNESS	N° FORI NR of HOLES	INTERASSE FORI BOLT PATTERN	Ø FORI Ø HOLES	CAMPANATURA TOTAL HEIGHT
RF8127	240	105,00	4,00	6	120,00	6,50	-
RF8138	240	98,50	4,00	5	125,00	10,50	-
RF8502	240	92,50	5,00	4	114,00	8,50	-
RF8505	240	105,50	5,00	4	125,00	10,50	-
RF8510	240	125,20	4,00	5	140,00	6,50	-
RF8513	240	105,50	6,00	4	125,00	10,50	-
RF8518	240	128,00	5,00	5	140,00	6,50	-
RF8519	240	128,00	5,00	5	140,00	6.5	-
RF8521	240	129.5	6,00	5	141,00	6.5	-
RF8523	240	117,00	5,00	3	132,00	8.5	-
S38005	240	105,50	4,00	4	125,00	10,50	-
SZ08RI	240	89,00	5,00	5	110,00	10,50	-
SZ08RID	240	89,50	5,00	5	110,00	10,50	-
SZ21RID	240	119,00	4,00	6	134,00	6,50	-
SZ40RID	240	119,00	4,00	6	134,00	6,50	-
SZ41RID	240	120,50	5,00	5	141,00	10,50	-
SZ44RID	240	122,20	4,00	4	140,00	10,50	-
WF4102	240	95,00	3,00	4	110,00	6,20	-
WF4501	240	112,50	4,00	4	130,00	9,50	-
WF4506	240	112,50	4,00	4	130,00	9,50	-
WF4508	240	122,20	4,00	4	140,00	6,50	-
WF7520	240	110,00	5,00	6	125,00	6,50	-
WF7521	240	102,50	5,00	5	120,00	8,50	-
WF7523	240	118,00	5,00	4	136,00	10,50	-
WF7524	240	118,00	5,00	5	136,00	10.5	-
WF8101	240	98,50	4,00	5	125,00	10,50	-
WF8106	240	105,00	4,00	6	120,00	6,50	-
WF8506	240	105,50	6,00	4	125,00	10,50	-
WF8509	240	129.5	6,00	5	141,00	6.5	-
WF8512	240	117,00	5,00	3	132,00	6.5	-
YA10RI	240	115,00	4,00	6	133,00	6,50	-
YA10RID	240	115,50	4,50	6	133,00	6,50	-
YA46RID	240	92,50	5,00	4	114,00	8,50	-
SZ02FI	242	121,00	4,00	4	142,00	10,50	-
BY4506	245	115,50	4,00	6	133,00	6,50	-
DC05RI	245	108,30	5,00	4	125,00	8,50	-
DC05RID	245	108,30	5,00	4	125,00	8,50	-
DC06RID	245	83,50	5,00	4	102,00	9,50	-
RF7520	245	83,50	5,00	4	102,00	9,50	-
RF7524	245	83,50	5,00	4	102,00	8,50	-
RF7541	245	115,50	5,00	6	133,00	8,50	-
RF7549	245	132,00	5,00	5	150,00	10.5	-
RF8135	245	115,50	4,00	6	133,00	8,50	-
WF4507	245	115,50	4,00	6	133,00	6,50	-
WF7516	245	83,50	5,00	4	102,00	8,50	-
WF7526	245	132,00	5,00	5	150,00	10.5	-
YA03FI	245	115,00	4,00	6	133,00	6,50	-
YA03RI	245	115,00	5,00	6	133,00	6,50	-
YA08RI	245	115,00	4,50	6	133,00	8,50	-
YA08RID	245	115,50	4,50	6	133,00	8,50	-
YA10FI	245	118,00	3,00	6	134,00	6,50	-
YA31RID	245	58,00	4,00	4	76,00	8,50	-
YA32FID	245	115,50	4,00	6	133,00	8,50	-
YA44RI	245	105,00	5,00	5	125,00	10,50	-
YA44RID	245	105,00	5,00	5	125,00	10,50	-
YA47RID	245	115,50	5,00	6	133,00	8,50	-
YA52RID	245	115,00	4,00	6	133,00	6,50	-
IT03FI	248	110,00	4,00	6	129,00	8,50	-
GL07FLOWD	250	58,00	4,00	5	80,00	6,50	-
KW01FID	250	100,50	3,00	4	116,00	6,50	-
KW05FI	250	130,00	4,00	9	146,00	10,50	-
KW22RI	250	100,00	5,00	4	120,00	10,50	-
KW35FID	250	100,50	3,00	4	116,00	9,50	-
KW36RID	250	100,20	5,00	5	120,00	10,50	-
KW39FID	250	109,50	3,00	4	126,00	9,50	-
KW40RID	250	110,50	6,00	4	130,00	10,50	-
RF7521	250	110,50	6,00	4	130,00	10,50	-
RF8506	250	117,00	5,00	4	138,00	10,50	-
RF8507	250	117,00	5,00	5	138,00	10,50	-
SZ01FID	250	119,00	3,00	6	134,00	6,50	-
SZ04RI	250	134,00	5,00	6	156,00	10,50	-
SZ14RI	250	84,00	4,00	4	100,00	8,50	-
SZ33RID	250	117,00	5,00	4	138,00	10,50	-
SZ35RID	250	117,00	5,00	5	138,00	10,50	-

Tabella Dischi / Disk Table

CODICE DISCO P/N	Ø ESTERNO OUTER Ø	Ø INTERNO INNER Ø	SPESSORE THICKNESS	N° FORI NR of HOLES	INTERASSE FORI BOLT PATTERN	Ø FORI Ø HOLES	CAMPANATURA TOTAL HEIGHT
SZ37FID	250	118,00	3,00	4	134,00	9,20	-
RF7522	255	106,00	6,00	4	124,50	10,50	-
RF7539	255	105,00	5,00	4	125,00	10,50	-
TR03RID	255	105,00	5,00	4	125,00	10,50	-
WF7515	255	106,00	6,00	4	124,50	10,50	-
H003FI	256	144,00	4,00	4	166,00	10,50	-
H018RI	256	144,00	5,00	4	166,00	10,50	-
H021FI	256	144,00	5,00	6	166,00	10,50	-
H021FID	256	145,00	5,00	6	166,00	10,50	-
H023RI	256	94,00	5,00	4	110,00	8,50	-
H023RID	256	94,00	5,00	4	110,00	8,50	-
H051RID	256	145,00	5,00	6	166,00	10,50	-
RF7532	256	70,00	5,00	4	110,00	8,50	-
RF7533	256	145,00	5,00	6	166,00	10,50	-
RF8118	256	144,00	4,50	6	166,00	10,50	-
S38003	256	145,00	5,00	6	166,00	10,50	-
WF4103	256	102,00	3.5	6	117,00	6.5	-
WF4504	256	144,00	5,00	4	166,00	10,50	-
WF7102	256	144,00	4,00	4	166,00	10,50	-
WF7502	256	70,00	5,00	4	110,00	8,50	-
WF7506	256	56,30	5,00	5	82,50	10,50	-
AP10FI	260	60,00	4,00	5	80,00	8,50	-
AP10FID	260	61,00	4,00	5	80,00	8,50	-
BW01FI	260	145,00	5,00	10	160,00	13,90	-
GA04FLD	260	108,50	3,00	6	125,00	6,50	-
KM05FI	260	105,50	5,00	5	130,00	10,50	-
KT02FID	260	127,00	3,20	6	143,00	6,50	-
KW38RID	260	141,00	5,00	4	162,00	10,50	-
PI04FI	260	125,20	4,00	5	140,00	6,50	-
PI04FID	260	125,00	4,00	5	140,00	6,50	-
RF7536	260	141,00	5,00	4	162,00	10,50	-
RF7537	260	140,00	5,00	6	161,00	10,50	-
RF7538	260	105,50	5,00	5	126,00	10,50	-
RF7543	260	102,00	5,00	5	120,00	8,50	-
RF8117	260	88,00	4,00	5	110,00	10,50	-
RF8120	260	58,00	4,00	5	80,00	10,50	-
RF8128	260	101,00	5,00	5	120,00	8,50	-
RF8137	260	121,00	4,50	4	142,00	10,50	-
RF8139	260	125,20	5,00	5	140,00	6,50	-
S34001	260	101,30	3,20	6	117,00	6,50	-
S34003	260	120,00	3,20	4	135,00	6,50	-
S34005	260	127,50	3,20	6	143,00	6,50	-
S34011	260	120,00	3,20	4	135,00	8,50	-
S34012	260	143,00	3,20	6	143,00	6,50	-
S34013	260	95,00	3.22	4	110,00	6.5	-
S38001	260	61,00	4,00	5	80,00	8,50	-
S38006	260	105,50	5,00	5	130,00	10,50	-
S38007	260	88,00	4,00	5	110,00	10,50	-
S38009	260	125,00	4,00	5	140,00	6,50	-
S38010	260	121,00	4,00	6	142,00	10,50	-
S38011	260	121,00	4,50	4	142,00	10,50	-
S38012	260	121,50	4,00	5	142,00	10,50	-
SZ24FI	260	121,00	5,00	6	142,00	10,50	-
SZ30FID	260	121,00	4,50	4	142,00	10,50	-
SZ32FI	260	121,50	4,30	5	142,00	10,50	-
WF3501	260	56.3	6,00	5	82.5	10.5	-
WF7501	260	140,00	5,00	6	161,00	10,50	-
WL4002	260	120,00	3,20	4	135,00	8,50	-
WL4005	260	120,00	3,20	4	135,00	6,50	-
WL4016	260	127,50	3,20	6	143,00	6,50	-
WL8002R	260	58,00	4,00	5	80,00	10.5	-
WF8118	263	101,00	5,00	5	120,00	8.5	-
BW06RI	265	136,50	5,00	5	160,00	10,50	-
BW06RID	265	136,50	5,00	5	160,00	10,50	-
BY1501	265	136,50	5,00	5	160,00	10,50	-
RF7525	265	83,50	6,00	4	102,00	8,50	-
WF7517	265	83,50	6,00	4	102,00	8,50	-
RF7542	267	132,00	5,00	5	150,00	8,50	-
RF8115	267	132,00	4,00	6	150,00	8,50	-
RF8116	267	132,00	4,00	5	150,00	9,00	-
RF8141	267	115,00	4,00	5	133,00	8.5	-
RF8503	267	132,50	5,00	6	150,00	8,50	-
RF8522	267	136,00	5,00	3	150,00	8.5	-
RL8001	267	132,00	5,00	6	150,00	8,50	-

Tabella Dischi / Disk Table

CODICE DISCO P/N	Ø ESTERNO OUTER Ø	Ø INTERNO INNER Ø	SPESSORE THICKNESS	N° FORI NR of HOLES	INTERASSE FORI BOLT PATTERN	Ø FORI Ø HOLES	CAMPANATURA TOTAL HEIGHT
RL8002	267	132,00	4,00	5	150,00	9,00	-
S38016	267	132,00	4,00	5	150,00	9,00	-
S38017	267	132,00	4,00	6	150,00	8,50	-
S38020	267	132,00	4,00	5	150,00	9,00	-
WF7511	267	132,00	5,00	5	150,00	8,50	-
WF8115	267	115,00	4,00	5	133,00	8.5	-
WF8501	267	132,50	5,00	6	150,00	8,50	-
WL1001	267	108.5	5,00	6	125,00	6.5	-
WL8001L	267	132,00	5,00	6	150,00	8,50	-
WL8001R	267	132,00	5,00	6	150,00	8,50	-
YA02FI	267	132,00	4,00	6	150,00	6,50	-
YA09RI	267	132,00	5,00	6	150,00	8,50	-
YA09RID	267	132,50	5,00	6	150,00	8,50	-
YA18FID	267	118,00	4,00	6	134,00	6,50	-
YA45FLD	267	132,00	4,00	5	150,00	9,00	-
YA46FLD	267	132,00	4,00	5	150,00	9,00	-
YA48RI	268	132,00	5,00	3	150,00	8,50	-
YA48RID	268	132,00	5,00	3	150,00	8,50	-
BY4122	270	101,00	3,20	6	117,00	6,50	-
BY4123	270	120,00	3,20	4	135,00	6,50	-
BY4124	270	127,50	3,20	6	143,00	6,50	-
BY4125	270	100,50	3,20	4	116,00	9,50	-
BY4126	270	109,00	3,20	4	126,00	9,50	-
BY4127	270	118,00	3,20	6	134,00	6,50	-
BY4128	270	118,00	3,20	4	134,00	9,50	-
KW02FI	270	130,00	5,00	6	150,00	10,50	-
MB04FID	270	129,00	5,00	5	146,00	8,50	-
RF8122	270	129,00	5,00	6	146,00	8,50	-
RF8136	270	129,00	5,00	5	146,00	8,50	-
RF8140	270	152,00	5,00	5	174,00	10,50	-
S34002	270	101,30	3,20	6	117,00	6,50	-
S34004	270	120,00	3,20	4	135,00	6,50	-
S34006	270	127,50	3,20	6	143,00	6,50	-
S34007	270	100,50	3,20	4	116,00	9,50	-
S34008	270	109,50	3,20	4	126,00	9,50	-
S34009	270	118,00	3,20	6	134,00	6,50	-
S34010	270	118,30	3,20	4	134,00	9,25	-
WF8105	270	129,00	5,00	6	146,00	8,50	-
WF8113	270	152,00	5,00	5	174,00	10,50	-
WL4003	270	101,30	3,20	6	117,00	6,50	-
WL4007	270	127,50	3,20	6	143,00	6,50	-
WL4008	270	109,50	3,20	4	126,00	9,50	-
WL4010	270	118,00	3,20	6	134,00	6,50	-
WL4012	270	118,30	3,20	4	134,00	9,20	-
WL4014	270	70,50	3,20	6	89,00	6,50	-
AP20RID	272	140,50	5,00	6	158,00	8,50	-
RF7527	272	140,00	5,00	6	158,00	8,50	-
WF8102	273	173,00	4,00	5	250,50	10,50	-
SZ15RI	275	57,00	5,00	6	78,00	10,50	-
WF8511	275	127.5	5,00	5	150,00	10.5	-
BW03RI	276	174,00	5,00	5	198,00	10,50	-
BW03RID	276	173,00	5,00	5	198,00	10,50	-
HO04FI	276	144,00	4,00	6	166,00	10,50	-
HO18FI	276	144,00	4,00	4	166,00	10,50	-
HO18FID	276	144,50	4,00	4	166,00	10,50	-
HO22FI	276	144,00	5,00	6	166,00	10,50	-
HO22FID	276	144,00	5,00	6	166,00	10,50	-
HO31RI	276	144,00	5,00	6	166,00	10,50	-
RF7534	276	171,00	6,00	5	190,00	10,50	-
RF7547	276	136.5	5,00	5	160,00	10.5	-
RF8130	276	144,00	6,00	6	166,00	10,50	-
S38004	276	144,00	5,00	6	166,00	10,50	-
WF7108	276	144,00	4,00	5	166,00	10.5	-
WF7513	276	171,00	6,00	5	190,00	10,50	-
WF7525	276	136.5	5,00	5	160,00	10.5	-
WF8117	276	144,00	6,00	6	166,00	10.5	-
RH8103	278	60.5	5,00	5	80.1	14.1	-
KW07FI	280	130,00	5,00	6	150,00	10,50	-
RH8501	280	140,00	5,00	5	161,00	13.8	-
WF7103	280	61,50	4,00	6	80,00	10,50	-
WH8501	280	140,00	5,00	5	161,00	13,80	-
WK048L	280	80,50	5,00	5	100,00	10,50	-
WK048R	280	80,50	5,00	5	100,00	10,50	-
RF7523	282	132,00	5,00	6	150,00	8,50	-

Tabella Dischi / Disk Table

CODICE DISCO P/N	Ø ESTERNO OUTER Ø	Ø INTERNO INNER Ø	SPESSORE THICKNESS	N° FORI NR of HOLES	INTERASSE FORI BOLT PATTERN	Ø FORI Ø HOLES	CAMPANATURA TOTAL HEIGHT
RF8512	282	132,00	5,00	5	165,00	10,75	-
S38014	282	132,50	4,00	6	150,00	8,50	-
WF7510	282	132,50	5,00	6	150,00	8,50	-
WF8505	282	132,00	5,00	5	165,00	10,75	-
YA05FI	282	132,00	5,00	6	150,00	8,50	-
YA05FID	282	132,00	5,00	6	150,00	8,50	-
YA17FI	282	132,00	4,00	6	150,00	8,50	-
YA25FI	282	132,00	4,00	6	150,00	8,50	-
YA25FID	282	132,50	4,00	6	150,00	8,50	-
BW02FI	285	165,00	5,00	10	180,00	13,90	-
STX125	290	64,00	5,00	5	86,00	10.5	19.5
STX13	290	64,00	5,00	5	86,00	10,50	19,50
STX69	290	69,00	5,00	5	91,00	10,50	-
STX93	290	121,50	5,00	5	142,00	10,50	-
SZ06FL	290	121,00	5,00	6	142,00	10,50	-
WF7104	290	130,00	5,00	5	150,00	10,50	-
WK013L	290	64,00	5,00	5	86,00	10,50	19,50
WK013R	290	64,00	5,00	5	86,00	10,50	19,50
WK069L	290	69,00	5,00	5	91,00	10,50	-
WK069R	290	69,00	5,00	5	91,00	10,50	-
WK093L	290	121,50	5,00	5	142,00	10,50	-
WK093R	290	121,50	5,00	5	142,00	10,50	-
WK103R	290	130,00	5,00	6	150,00	10,50	-
WK125L	290	64,00	5,00	5	86,00	10.5	19.5
WK125R	290	64,00	5,00	5	86,00	10.5	19.5
WL705L	290	69,00	5,00	5	91,00	10,50	-
WL705R	290	69,00	5,00	5	91,00	10,50	-
HD01FI	292	56,00	5,00	5	82,50	8,50	-
HD01FL	292	56,30	5,00	5	82,50	8,50	-
HD01RI	292	56,00	5,00	5	82,50	10,50	-
HD01RL	292	56,30	5,00	5	82,50	10,50	-
HD03FLD	292	50,50	5,00	5	82,50	8,50	-
HD03RLD	292	50,50	5,00	5	82,50	10,50	-
HD05FLD	292	56,00	5,00	5	82,50	8,50	-
HD05RLD	292	56,00	5,00	5	82,50	10,50	-
HD07FLD	292	50,50	5,00	5	82,50	8,50	-
HD09FLD	292	56,00	5,00	5	82,50	8,50	-
HD292R	292	50,50	5,00	5	82,50	8,50	-
HD292RFL	292	50,50	5,00	5	82,50	8,50	-
HD292SFL	292	50,50	5,00	5	82,50	10,50	-
HDF	292	50,50	5,00	5	82,50	8,50	-
HDFFL	292	50,50	5,00	5	82,50	8,50	-
HDR	292	50,50	5,00	5	82,50	10,50	-
HDRFL	292	50,50	5,00	5	82,50	8,50	-
RF7112	292	156,00	4,00	5	170,00	8,60	-
WF7101	292	156,00	4,00	5	170,00	8,60	-
WF7507	292	56,30	5,00	5	82,50	10,50	-
WK106L	292	56,30	5,00	5	82,50	8,50	-
WK106R	292	56,30	5,00	5	82,50	8,50	-
SZ15FL	295	57,00	5,00	6	78,00	10.5	-
HO05FI	296	144,00	4,00	6	166,00	10,50	-
HO23FI	296	144,00	5,00	6	166,00	10,50	-
HO23FID	296	144,50	5,00	6	166,00	10,50	-
HO33FI	296	184,50	6,00	6	206,00	10,50	-
STX04	296	58,00	5,00	6	74,00	6,50	17,00
STX05	296	62,00	5,00	6	78,00	6,50	17,00
STX16	296	62,00	5,00	6	78,00	6,50	22,50
STX40	296	94,00	5,00	6	110,00	6,50	12,50
STX43	296	58,00	5,00	6	74,00	6,50	22,70
STX96	296	94,00	5,00	6	110,00	6,50	14,50
WK004L	296	58,00	5,00	6	74,00	6,50	17,00
WK004R	296	58,00	5,00	6	74,00	6,50	17,00
WK005L	296	62,00	5,00	6	78,00	6,50	17,00
WK005R	296	62,00	5,00	6	78,00	6,50	17,00
WK016L	296	62,00	5,00	6	78,00	6,50	22,50
WK016R	296	62,00	5,00	6	78,00	6,50	22,50
WK031L	296	61,00	5,00	5	81,00	10,50	13,50
WK031R	296	61,00	5,00	5	81,00	10,50	13,50
WK040L	296	94,00	5,00	6	110,00	6,50	12,50
WK040R	296	94,00	5,00	6	110,00	6,50	12,50
WK043L	296	58,00	5,00	6	74,00	6,50	22,70
WK043R	296	58,00	5,00	6	74,00	6,50	22,70
WK096L	296	94,00	5,00	6	110,00	6,50	14,50
WK096R	296	94,00	5,00	6	110,00	6,50	14,50

Tabella Dischi / Disk Table

CODICE DISCO P/N	Ø ESTERNO OUTER Ø	Ø INTERNO INNER Ø	SPESSORE THICKNESS	N° FORI NR of HOLES	INTERASSE FORI BOLT PATTERN	Ø FORI Ø HOLES	CAMPANATURA TOTAL HEIGHT
WK123R	296	94,00	5,00	6	110,00	6,50	17,80
RL7009	298	132,50	4,20	6	150,00	8,50	-
YA21FL	298	132,00	5,00	6	150,00	8,50	-
YA47FLD	298	132,00	4,20	6	150,00	8,50	-
AP13FL	300	105,00	5,00	6	120,00	6,50	-
AP19FL	300	140,00	5,00	6	158,00	8,50	-
AP19FLD	300	140,00	5,00	6	158,00	8,50	-
BY102L	300	105,00	5,00	6	120,00	6,50	-
BY102R	300	105,00	5,00	6	120,00	6,50	-
BY770L	300	80,50	5,00	5	100,00	10,50	-
BY770R	300	80,50	5,00	5	100,00	10,50	-
KT03FL	300	127,00	4,00	6	143,00	6,50	-
KT03FLD	300	127,00	4,00	6	143,00	6,50	-
KT08FLD	300	127,00	4,00	6	143,00	6,50	-
KW13FID	300	130,00	5,00	9	146,00	10,50	-
RF3104	300	56,30	5,00	5	82,50	8,50	-
RF3105	300	172,50	5,00	5	172,50	13,50	-
RF3503	300	56,30	5,00	5	82,50	10,50	-
RF3504	300	56,30	6,00	5	82,50	10,50	-
RH8101L	300	145,00	5,00	5	168,00	13.8	-
RH8101R	300	145,00	5,00	5	168,00	13.8	-
RH8102	300	100.5	5,00	6	119.5	15.3	-
RL3005	300	56,00	5,00	5	82,50	8,50	-
RL3006	300	56,00	5,00	5	82,50	10,50	-
RL3007	300	56,00	6,00	5	82,50	10,50	-
RL7006	300	105,00	5,00	6	120,00	6,50	-
STX08	300	61,00	5,00	5	81,00	10,50	13,50
STX11	300	64,00	5,00	5	86,00	10,50	19,50
STX120	300	124,00	5,00	6	142,50	6,50	-
STX121	300	124,00	5,00	6	142,50	6,50	-
STX15	300	64,00	5,00	6	80,00	8,50	10,00
STX21	300	132,00	5,00	6	150,00	8,50	-
STX39	300	61,00	5,00	6	80,00	8,50	11,00
STX46	300	132,00	5,00	5	150,00	8,50	-
STX67	300	69,00	5,00	5	91,00	10,50	-
STX70	300	80,50	5,00	5	100,00	10,50	-
STX80	300	64,15	5,00	6	80,00	8,50	-
SZ09FI	300	121,00	4,00	6	142,00	10,50	-
WF7107	300	61,00	5,00	6	74,00	10.5	-
WF7109	300	91,00	4,00	6	102,00	6.5	-
WH8101L	300	145,00	5,00	5	168,00	13,80	-
WH8101R	300	145,00	5,00	5	168,00	13,80	-
WH8102	300	100.5	5,00	6	119.5	15.3	-
WK008L	300	61,00	5,00	5	81,00	10,50	13,50
WK008R	300	61,00	5,00	5	81,00	10,50	13,50
WK015L	300	64,00	5,00	6	80,00	8,50	10,00
WK015R	300	64,00	5,00	6	80,00	8,50	10,00
WK021L	300	132,00	5,00	6	150,00	8,50	-
WK021R	300	132,00	5,00	6	150,00	8,50	-
WK039L	300	61,00	5,00	6	80,00	8,50	10,70
WK039R	300	61,00	5,00	6	80,00	8,50	10,70
WK046L	300	132,00	5,00	5	150,00	8,50	-
WK046R	300	132,00	5,00	5	150,00	8,50	-
WK067L	300	69,00	5,00	5	91,00	10,50	-
WK067R	300	69,00	5,00	5	91,00	10,50	-
WK070L	300	80,50	5,00	5	100,00	10,50	-
WK070R	300	80,50	5,00	5	100,00	10,50	-
WK120L	300	124,00	5,00	6	142,50	6,50	-
WK121R	300	124,00	5,00	6	142,50	6,50	-
WL101L	300	105,00	5,00	6	120,00	6,50	-
WL101R	300	105,00	5,00	6	120,00	6,50	-
WL703L	300	80,50	5,00	5	100,00	10,50	-
WL703R	300	80,50	5,00	5	100,00	10,50	-
WL704L	300	132,00	5,00	5	150,00	8,50	-
WL704R	300	132,00	5,00	5	150,00	8,50	-
WL709L	300	132,00	5,00	6	150,00	8,50	-
WL709R	300	132,00	5,00	6	150,00	8,50	-
BY101L	305	181,00	4,60	5	203,30	13,80	-
BY101R	305	181,00	4,60	5	203,30	13,80	-
BY103L	305	82,50	5,00	5	100,50	10,50	-
BY103R	305	82,50	5,00	5	100,50	10,50	-
RH7003	305	181,00	4,60	5	203,15	16,80	-
RL7005	305	118,00	5,00	6	134,00	9,00	-
RL7007	305	83,00	5,00	5	100,50	10,50	-

Tabella Dischi / Disk Table

CODICE DISCO P/N	Ø ESTERNO OUTER Ø	Ø INTERNO INNER Ø	SPESSORE THICKNESS	N° FORI NR of HOLES	INTERASSE FORI BOLT PATTERN	Ø FORI Ø HOLES	CAMPANATURA TOTAL HEIGHT
STX112	305	64,00	5,00	6	80,00	8,50	-
STX97	305	72,00	5,00	5	90,00	8,50	10,00
WH7003	305	181,00	4,60	5	203,15	13,80	-
WK097L	305	72,00	5,00	5	90,00	8,50	10,00
WK097R	305	72,00	5,00	5	90,00	8,50	10,00
WK112L	305	64,00	5,00	6	80,00	8,50	10,00
WK112R	305	64,00	5,00	6	80,00	8,50	10,00
WL108L	305	82,50	5,00	5	100,50	10,50	-
WL108R	305	82,50	5,00	5	100,00	10,50	-
BY105L	310	132,00	5,00	5	150,00	8,50	-
BY105R	310	132,00	5,00	5	150,00	8,50	-
BY106L	310	121,50	5,00	5	142,00	10,50	-
BY106R	310	121,50	5,00	5	142,00	10,50	-
BY701L	310	102,00	5,00	6	120,00	8,15	-
BY701R	310	102,00	5,00	6	120,00	8,15	-
BY711L	310	132,00	5,00	5	150,00	8,50	-
BY711R	310	132,00	5,00	5	150,00	8,50	-
BY747L	310	94,00	5,00	6	110,00	6,50	12,50
BY747R	310	94,00	5,00	6	110,00	6,50	12,50
BY778L	310	132,00	5,00	5	150,00	8,50	-
BY778R	310	132,00	5,00	5	150,00	8,50	-
BY790L	310	80,50	5,00	5	100,00	10,50	-
BY790R	310	80,50	5,00	5	100,00	10,50	-
RH7006	310	165.5	5,00	5	194,00	20.5	-
RL7008	310	144,00	5,00	6	166,00	8,50	-
RL7010	310	121,50	5,00	5	142,00	10,50	-
STX06	310	61,00	5,00	5	81,00	10,50	13,50
STX10	310	64,00	5,00	5	86,00	10,50	22,50
STX101	310	102,00	5,00	6	120,00	8,15	-
STX12	310	64,00	5,00	5	86,00	10,50	19,50
STX17	310	58,00	5,00	6	74,00	6,50	17,00
STX30	310	62,00	5,00	6	78,00	6,50	21,50
STX38	310	62,00	5,00	6	78,00	6,50	18,50
STX47	310	94,00	5,00	6	110,00	6,50	12,50
STX68	310	69,00	5,00	5	91,00	10,50	-
STX76	310	100,00	5,00	5	120,00	10,50	-
STX78	310	132,00	5,00	5	150,00	8,50	-
STX90	310	80,50	5,00	5	100,00	10,50	-
STX94	310	84,50	5,00	5	100,50	10,50	-
TR03FLD	310	144,00	5,00	6	166,00	8,50	-
WH7005L	310	165.5	5,00	5	194,00	20.5	-
WH7005R	310	165.5	5,00	5	194,00	20.5	-
WK006L	310	61,00	5,00	5	81,00	10,50	13,50
WK006R	310	61,00	5,00	5	81,00	10,50	13,50
WK010L	310	64,00	5,00	5	86,00	10,50	22,50
WK010R	310	64,00	5,00	5	86,00	10,50	22,50
WK012L	310	64,00	5,00	5	86,00	10,50	19,50
WK012R	310	64,00	5,00	5	86,00	10,50	19,50
WK030L	310	62,00	5,00	6	78,00	6,50	21,50
WK030R	310	62,00	5,00	6	78,00	6,50	21,50
WK038L	310	62,00	5,00	6	78,00	6,50	18,50
WK038R	310	62,00	5,00	6	78,00	6,50	18,50
WK047L	310	94,00	5,00	6	110,00	6,50	12,50
WK047R	310	94,00	5,00	6	110,00	6,50	12,50
WK068L	310	69,00	5,00	5	91,00	10,50	-
WK068R	310	69,00	5,00	5	91,00	10,50	-
WK076L	310	100,00	5,00	5	120,00	10,50	-
WK076R	310	100,00	5,00	5	120,00	10,50	-
WK078L	310	132,00	5,80	5	150,00	8,50	-
WK078R	310	132,00	5,80	5	150,00	8,50	-
WK079L	310	127,00	5,00	6	143,00	6,50	-
WK085L	310	78,00	5,00	5	100,50	10,50	14,50
WK085R	310	78,00	5,00	5	100,50	10,50	14,50
WK086L	310	118,00	5,00	6	134,00	6,50	-
WK089L	310	121,50	5,00	5	142,00	10,50	-
WK089R	310	121,50	5,00	5	142,00	10,50	-
WK090L	310	80,50	5,00	5	100,00	10,50	-
WK090R	310	80,50	5,00	5	100,00	10,50	-
WK094L	310	84,50	5,00	5	100,50	10,50	14,00
WK094R	310	84,50	5,00	5	100,50	10,50	14,00
WK101L	310	102,00	5,00	6	120,00	8,15	-
WK101R	310	102,00	5,00	6	120,00	8,15	-
WK111L	310	132,00	5,00	5	150,00	8,50	-
WK111R	310	132,00	5,00	5	150,00	8,50	-

Tabella Dischi / Disk Table

CODICE DISCO P/N	Ø ESTERNO OUTER Ø	Ø INTERNO INNER Ø	SPESSORE THICKNESS	N° FORI NR of HOLES	INTERASSE FORI BOLT PATTERN	Ø FORI Ø HOLES	CAMPANATURA TOTAL HEIGHT
WK122L	310	82,50	5,00	5	102,00	10,50	-
WK122R	310	82.5	5,00	5	102,00	10.5	-
WK124L	310	78,00	5,00	5	100,50	10,50	-
WK128L	310	144,00	5,00	6	166,00	10.5	-
WK128R	310	144,00	5,00	6	166,00	10.5	-
WL104L	310	132,00	5,00	5	150,00	8,50	-
WL104R	310	132,00	5,00	5	150,00	8,50	-
WL105L	310	121,50	5,00	5	142,00	10,50	-
WL105R	310	121,50	5,00	5	142,00	10,50	-
WL708L	310	132,00	5,00	5	150,00	8,50	-
WL708R	310	132,00	5,00	5	150,00	8,50	-
HO33RI	316	184,50	6,00	6	206,00	10,50	-
HO26FL	318	144,00	5,00	6	166,00	10,50	-
HO26FLD	318	144,00	5,00	6	166,00	10,50	-
BY104L	320	127,00	5,00	6	143,00	6,50	-
BY709L	320	176,00	5,00	5	203,30	8,60	-
BY709R	320	176,00	5,00	5	203,30	8,60	-
BY773L	320	64,00	5,00	6	80,00	8,50	10,00
BY773R	320	64,00	5,00	6	80,00	8,50	10,00
BY798L	320	94,00	5,00	6	110,00	6,50	15,25
BY798R	320	94,00	5,00	6	110,00	6,50	15,25
DC05FID	320	176,70	4,60	6	200,00	13,85	-
RF7111	320	176,70	4,60	6	200,03	13,85	-
RF7113	320	211,00	5,00	5	230,00	10.5	-
RH7004	320	181,00	4,60	5	203,15	16,80	-
RH7005	320	181,00	5,00	5	100,15	13,80	-
RL7011	320	150,00	5,00	5	166,00	10,50	-
STX01	320	64,00	5,00	6	80,00	8,50	10,00
STX09	320	61,00	5,00	5	81,00	10,50	13,50
STX110	320	72,00	5,00	5	90,00	8,50	10,00
STX113	320	94,00	5,00	5	110,00	6,50	12,50
STX118	320	72,00	5,00	5	90,00	8,50	15,00
STX20	320	69,00	5,00	5	91,00	10,50	-
STX29	320	78,00	5,00	6	100,00	10,50	10,30
STX33	320	132,00	5,00	6	150,00	8,50	-
STX41	320	94,00	5,00	6	110,00	6,50	12,50
STX50	320	118,00	5,00	4	134,00	6,50	-
STX61	320	78,00	5,00	5	100,50	10,50	14,50
STX62	320	64,00	5,00	6	80,00	8,50	15,00
STX66	320	72,00	5,00	5	90,00	8,50	15,00
STX71	320	132,00	5,00	5	150,00	8,50	-
STX73	320	64,00	5,00	6	80,00	8,50	10,00
STX74	320	132,00	5,00	6	150,00	8,50	14,25
STX83	320	78,00	5,00	5	100,50	10,50	17,50
STX98	320	94,00	5,00	6	109,00	6,50	15,25
WF7105	320	211,00	5,00	6	230,00	10,50	-
WF7106	320	211,00	5,00	5	230,00	10.5	-
WH7004	320	181,00	4,60	5	203,15	13,80	-
WK001L	320	64,00	5,00	6	80,00	8,50	10,00
WK001R	320	64,00	5,00	6	80,00	8,50	10,00
WK009L	320	61,00	5,00	5	81,00	10,50	13,50
WK009R	320	61,00	5,00	5	81,00	10,50	13,50
WK020L	320	69,00	5,00	5	91,00	10,50	-
WK020R	320	69,00	5,00	5	91,00	10,50	-
WK029L	320	78,00	5,00	6	100,50	10,50	10,30
WK029R	320	78,00	5,00	6	100,50	10,50	-
WK033L	320	132,00	5,00	6	150,00	8,50	-
WK033R	320	132,00	5,00	6	150,00	8,50	-
WK041L	320	94,00	5,00	6	110,00	6,50	12,50
WK041R	320	94,00	5,00	6	110,00	6,50	12,50
WK050L	320	118,00	5,00	4	134,00	6,50	-
WK051L	320	101,00	5,00	6	117,00	6,50	-
WK053L	320	120,00	5,00	6	135,00	6,50	-
WK054L	320	127,00	5,00	6	143,00	6,50	-
WK055L	320	118,00	5,00	6	134,00	6,50	-
WK059L	320	120,00	5,00	4	135,00	8,00	9,50
WK061L	320	78,00	5,00	5	100,50	10,50	14,50
WK061R	320	78,00	5,00	5	100,50	10,50	14,50
WK062L	320	64,00	5,00	6	80,00	8,50	15,00
WK062R	320	64,00	5,00	6	80,00	8,50	15,00
WK066L	320	72,00	5,00	5	90,00	8,50	15,00
WK066R	320	72,00	5,00	5	90,00	8,50	15,00
WK071L	320	132,00	5,00	5	150,00	8,50	-
WK071R	320	132,00	5,00	5	150,00	8,50	-

Tabella Dischi / Disk Table

CODICE DISCO P/N	Ø ESTERNO OUTER Ø	Ø INTERNO INNER Ø	SPESSORE THICKNESS	N° FORI NR of HOLES	INTERASSE FORI BOLT PATTERN	Ø FORI Ø HOLES	CAMPANATURA TOTAL HEIGHT
WK073L	320	64,00	5,00	6	80,00	8,50	10,00
WK073R	320	64,00	5,00	6	80,00	8,50	10,00
WK074L	320	132,00	5,00	6	150,00	8,50	14,25
WK077L	320	118,30	5,00	4	134,00	9,20	-
WK083L	320	78,00	5,00	5	100,50	10,50	17,50
WK083R	320	78,00	5,00	5	100,50	10,50	17,50
WK087L	320	120,00	5,00	4	135,00	8,50	-
WK092L	320	80,00	5,00	5	101,50	8,50	10,00
WK092R	320	80,00	5,00	5	101,50	8,50	10,00
WK098L	320	94,00	5,00	6	110,00	6,50	15,25
WK098R	320	94,00	5,00	6	110,00	6,50	15,25
WK102L	320	150,00	5,00	5	165,00	10,50	-
WK102R	320	150,00	5,00	5	165,00	10,50	-
WK104L	320	64,00	5,00	6	80,00	8,50	10,00
WK104R	320	64,00	5,00	6	80,00	8,50	10,00
WK107R	320	64,00	5,00	6	80,00	8,50	10,00
WK109L	320	181,00	5,00	5	203,30	13,80	-
WK109R	320	181,00	5,00	5	203,30	13,80	-
WK110L	320	72,00	5,00	5	90,00	8,50	10,00
WK110R	320	72,00	5,00	5	90,00	8,50	10,00
WK113L	320	94,00	5,00	5	110,00	6,50	12,50
WK113R	320	94,00	5,00	5	110,00	6,50	12,50
WK114L	320	64,00	5,00	6	80,00	8,50	10,00
WK114R	320	64,00	5,00	6	80,00	8,50	10,00
WK115L	320	127,00	5,00	6	143,00	6,50	-
WK116L	320	80,00	5,00	5	101,50	8,50	-
WK116R	320	80,00	5,00	5	101,50	8,50	-
WK117L	320	64,00	5,00	6	80,00	8,50	-
WK117R	320	64,00	5,00	6	80,00	8,50	-
WK118L	320	72,00	5,00	5	90,00	8,50	15,00
WK118R	320	72,00	5,00	5	90,00	8,50	15,00
WK119L	320	78,00	5,00	5	100,00	10,50	12,00
WK119R	320	78,00	5,00	5	100,00	10,50	12,00
WK126L	320	109,00	5,00	4	126,00	9.5	-
WK129L	320	144,00	5,00	6	166,00	10.5	-
WK129R	320	144,00	5,00	6	166,00	10.5	-
WK130L	320	138,00	5,00	6	154,00	6.5	-
WK130R	320	138,00	5,00	6	154,00	6.5	-
WK131L	320	52,00	5,00	5	80,00	8.5	-
WL103L	320	127,00	5,00	6	143,00	6,50	-
WL702L	320	132,00	5,00	5	150,00	8,50	-
WL702R	320	132,00	5,00	5	150,00	8,50	-
YA19FI	320	198,00	5,00	6	216,00	8,50	-
BY795L	330	72,00	5,00	5	90,00	8,50	15,00
BY795R	330	72,00	5,00	5	90,00	8,50	15,00
STX127	330	72,00	5,00	5	90,00	8.5	15,00
STX36	330	94,00	5,00	6	110,00	6,50	12,50
STX95	330	72,00	5,00	5	90,00	8,50	15,00
WK036L	330	94,00	5,00	6	110,00	6,50	12,50
WK036R	330	94,00	5,00	6	110,00	6,50	12,50
WK095L	330	72,00	5,00	5	90,00	8,50	15,00
WK095R	330	72,00	5,00	5	90,00	8,50	15,00
WK127L	330	72,00	5,00	5	90,00	8.5	15,00
WK042R	340	61,00	5,00	5	82,50	8,50	11,00
BL02FID	367	306,50	5,00	6	406,00	13,00	-

Le immagini hanno il solo scopo di presentare i prodotti.
The images used are aimed at presenting the products only.

FL > pastiglia anteriore sinistra / front left pad
FR > pastiglia anteriore destra / front right pad
R > pastiglia posteriore / rear pad

612

CM56
- Sinterizzata stradale post. uso sportivo
- Rear sintered pad

SM1
- Semimetallica polivalente
- Semi-metallic pad

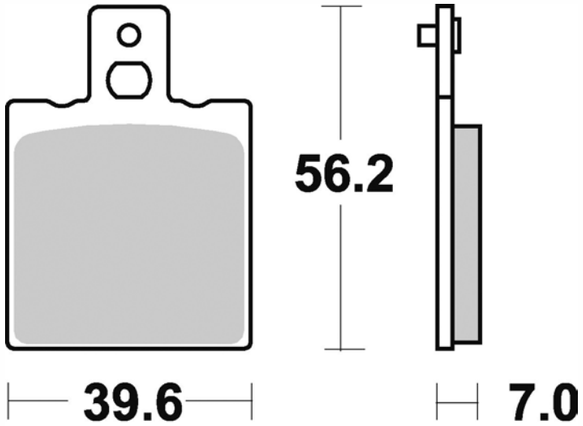

MODELLO MODEL	CC	ANNO YEAR	POSIZIONE POSITION
AGRATI G.			
TIGER XLE	50	1986-1988	FL
TIGER XR XRD	125	1985-1987	FL
APRILIA			
ET TUAREG	50	1986-1990	R
ET TUAREG	50	1986-1990	FL
RS Extrema	50	1993-1995	R
RS Extrema	50	1993-1998	FL
AF1	125	1987-1989	R
AF1 FUTURA	125	1990-1992	R
AF1 REPLICA	125	1988-1989	R
AF1 SINTESI	125	1988-1990	R
CLASSIC	125	1996	R
ETX	125	1984-1988	R
ETX	125	1984-1988	FR
EUROPA	125	1990-1992	R
EUROPA	125	1990-1992	R
RED ROSE	125	1990-1994	R
RS	125	1998-2005	R
RS Extrema	125	1992-1997	R
RS R PISTA	125	2004	R
RS R PISTA	125	2004	R
RS REPLICA	125	1992-1997	R
SPORT PRO	125	1992-1994	R
TUAREG RALLY	125	1989-1990	R
TUAREG RALLY	125	1991-1994	R
TUAREG WIND	125	1990-1991	R
TUONO	125	2003-2007	R
LEONARDO	150	1997-1998	FL
GP REPLICA	250	1991-1994	R
RS PISTA	250	2004	R
TUAREG RALLY	250	1986-1987	R
Tuareg	350	1988-1989	R
TUAREG WIND	350	1987-1989	R
ETX	600	1986-1987	R
TUAREG WIND	600	1988-1990	R
BENELLI			
2C SPORT	125	1982-1990	FL/FR
2C TURISMO	125	1982-1989	FL/FR
BX	125	1989-1994	R
BXK	125	1988-1994	FL
JARNO	125	1989-1994	R
VELVET	125	1999-2004	R
VELVET	150	1999-2004	R
354 SPORT	350	1983-1986	R
354 SPORT	350	1983-1986	FL/FR
354 SPORT	350	1983-1986	R
504 SPORT	500	1978-1982	FL/FR
654 SPORT	650	1978-1986	R
654 SPORT	650	1978-1986	FL/FR
654 SPORT	650	1978-1986	R
TORNADO TRE	900	2001-2002	R

MODELLO MODEL	CC	ANNO YEAR	POSIZIONE POSITION
TORNADO TRE	900	2001-2002	R
TNT	1130	2004	R
BETA			
QUADRA (Rear Drum Model)	50	1997-2001	FL
TEMPO	50	1997-1998	FL
ALP	240	1996-1999	R
GS RV	250	1980-1984	FL
GS RV	500	1982-1984	FL
BIMOTA			
YB7	400	1989	R
V-DUE	500	1997-2000	R
BELLARIA	600	1991-1993	R
BELLARIA	600	1991-1993	R
YB9	600	1997-2000	R
YB9	600	1997-2000	R
BB1 SUPERMONO	650	1996-2000	R
DB1	750	1986-1987	R
DB1	750	1986-1987	R
DB1 RS	750	1987-1989	R
DB1 RS	750	1987-1989	R
SB7	750	1995-2000	R
SB7	750	1995-2000	R
YB4 EI	750	1987-1991	R
YB4 EI	750	1987-1991	R
YB6	750	1987-1990	R
YB6	750	1987-1990	R
TESI 1D 851	851	1990-1991	R
TESI 1D 851	851	1990-1991	R
DB2 SR	904	1993-2000	R
DB2 SR	904	1993-2000	R
DB3 MANTRA	904	1995-2000	R
DB3 MANTRA	904	1995-2000	R
DB4	904	1998-1999	R
DB4	904	1998-1999	R
DB4 I.E.	904	2000-2001	R
DB4 I.E.	904	2000-2001	R
TESI 1D 906	904	1993-2000	R
TESI 1D 906	904	1993-2000	R
DIECI	1000	1991-1995	R
DIECI	1000	1991-1995	R
DIECI BIPOSTO	1000	1992-1995	R
DIECI BIPOSTO	1000	1992-1995	R
SB8K GOBERT	1000	2006	R
SB8K GOBERT	1000	2006	R
SB8R	1000	1997-2000	R
SB8R	1000	1997-2000	R
TESI 2D	1000	2005-2006	R
TESI 2D	1000	2005-2006	R
YB11	1000	1996-2000	R
YB11	1000	1996-2000	R
YB6	1000	1988-1989	R

MODELLO MODEL	CC	ANNO YEAR	POSIZIONE POSITION
YB6	1000	1988-1989	R
YB8 FURANO	1000	1992-2000	R
YB8 FURANO	1000	1992-2000	R
SB6	1100	1996-2000	R
SB6	1100	1996-2000	R
SB6R	1100	1998-2000	R
SB6R	1100	1998-2000	R
TUATARA	1100	1990	R
TUATARA	1100	1990	R
CAGIVA			
COCIS	50	1988-1991	FL
COCIS	50	1988-1991	R
CUCCIOLO	50	1998	FL
K3	50	1992-1993	FL
PRIMA	50	1992	R
PRIMA	50	1992	FR
SUPERCITY	50	1992	R
W4	50	1992-1995	R
W4	50	1992-1995	FL
COCIS	80	1989-1991	FL
LOW RIDER	80	1983-1988	FL
SST	80	1983-1988	FL
SUPERCITY	80	1992-1993	R
SUPERCITY	80	1992-1993	FR
SXT	80	1983	FL
ALETTA ORO	125	1985-1988	FL
ALETTA ORO	125	1985-1988	R
BLUES	125	1989-1995	R
BLUES	125	1993-1995	FL
CRUISER	125	1987-1989	R
DAKAR	125	1988-1989	FL
ELEFANT	125	1985-1988	FL
FRECCIA C10 ANNIVERSARY	125	1989	R
FRECCIA C12R	125	1989-1991	R
FRECCIA C9	125	1987-1988	R
K7	125	1990-1996	R
MITO	125	1991-1994	R
MITO EV	125	1995-2007	R
MITO SP525	125	2006-2010	R
PLANET	125	1997-2007	R
RAPTOR	125	2003-2010	R
SUPERCITY	125	1992-2000	R
TAMANACO	125	1988-1990	R
W8	125	1992-1995	R
W8	125	1992-1995	FL
WMX	125	1987-1988	FL
WMX	125	1987-1988	R
ELEFANT	200	1985-1987	FL
SST	250	1980-1986	FL
SX	250	1983-1987	FL
ALA AZZURRA	350	1983-1988	R
ALA AZZURRA	350	1983-1988	FL
ALA ROSSA	350	1983-1987	FL
ALA VERDE	350	1983-1986	FL
ELEFANT	350	1985-1988	R
SST	350	1980-1986	FL
SXT	350	1983-1985	FL
T4 E	350	1987-1992	FL
T4 R	350	1987-1992	FL
T4 E	500	1987-1990	FL
T4 R	500	1987-1990	FL
RIVER	600	1995-1999	R
ALA AZZURRA	650	1985-1988	R
ALA AZZURRA	650	1985-1988	FL/FR
ELEFANT	650	1985-1987	R
ELEFANT	750	1987	R
ELEFANT	750	1987	FL
DERBI			
EASY	50	1996	FL
DUCATI			
F3	350	1986-1988	R
F3	350	1986-1988	FL/FR
JUNIOR SS	350	1991-1993	R
XL PANTAH	350	1984	R
MONSTER	400	1994-1999	R
MONSTER	400	2001-2006	R
SS SUPERSPORT	400	1992-1997	R
SS SUPERSPORT JUNIOR	400	1992-1997	R
TL PANTAH	500	1985	R

MODELLO MODEL	CC	ANNO YEAR	POSIZIONE POSITION
SUPERMONO DESMOQUATTRO	530	1993	R
MONSTER	600	1994-2002	R
SS SUPERSPORT	600	1994-2000	R
TL PANTAH	600	1981-1985	R
MONSTER	620	2002-2005	R
MONSTER double disk	620	2005-2006	R
MONSTER single disk	620	2005-2006	R
MULTISTRADA double disk	620	2005-2006	R
SPORT	620	2003-2004	R
SS SUPERSPORT	620	2002-2005	R
DESMO	650	1987-1989	R
INDIANA	650	1986-1988	R
MONSTER	695	2006-2008	R
748 BIPOSTO	748	1995-2002	R
748 R	748	2000-2002	R
748 S	748	1999-2002	R
748 SP	748	1995-1997	R
748 SPS	748	1998-1999	R
F1	750	1985-1987	R
INDIANA	750	1989-1990	R
MONSTER	750	1994-2002	R
SS SUPERSPORT	750	1991-2002	R
MONSTER	800	2003-2004	R
MONSTER S2R	800	2005-2006	R
SPORT	800	2003-2004	R
SS SUPERSPORT	800	2003-2005	R
851 STRADA - SP	851	1988-1991	R
888 CORSA	888	1990-1994	R
888 DESMOQUATTRO	888	1993-1994	R
888 SP	888	1990-1993	R
MONSTER	900	1993-2004	R
SL 900 SUPERLIGHT	900	1991-1997	R
SS SUPERSPORT	900	1991-1997	R
PASO 907 I.E.	904	1990-1991	R
916 BIPOSTO	916	1994-1998	R
916 SP	916	1994-1996	R
916 SPS	916	1997-1998	R
MONSTER S4	916	2001-2003	R
996 BIPOSTO	996	1999-2001	R
996 R	996	2001	R
996 S	996	2001	R
996 SPS	996	1999-2000	R
MONSTER S4R	996	2003-2004	R
MONSTER S4R	996	2005-2006	R
998 BIPOSTO	998	2002-2003	R
998 R	998	2002-2003	R
998 S (four pads)	998	2002-2003	R
998 S (two pads)	998	2002-2003	R
MONSTER	1000	2003-2005	R
MONSTER S	1000	2003-2005	R
S4R Testastretta MONSTER	1000	2007-2008	R
S4RS Testastretta MONSTER	1000	2006-2008	R
SS SUPERSPORT	1000	2003-2006	R
FANTIC M.			
RC CABALLERO	50	1990-1993	FL
GILERA			
ARIZONA	125	1983-1985	FL
CRONO	125	1991-1994	R
CROSS	125	1984-1985	FL
RX	125	1984-1988	FL
XR1	125	1988-1989	R
XR2	125	1988-1989	R
ARIZONA	200	1985-1987	FL
RV ES	200	1985-1988	R
RX	200	1983-1986	FL
CROSS	250	1983-1985	FL
MX LC	250	1983-1985	FL
RALLY	250	1987-1989	R
PIUMA	500	1990-1991	R
SATURNO	500	1988-1989	R
NORDWEST	600	1991-1993	R
XRT	600	1988-1989	R
HONDA			
CRM (Italia)	125	1990	R
MTX R	125	1984-1988	R
NS ROTHMANS	125	1986-1987	R
NSR	125	1987-1989	R
NSR F RAIDEN	125	1993-2003	R
NSR R	125	1990-2003	R

Le immagini hanno il solo scopo di presentare i prodotti.
The images used are aimed at presenting the products only.

FL > pastiglia anteriore sinistra / front left pad
FR > pastiglia anteriore destra / front right pad
R > pastiglia posteriore / rear pad

MODELLO MODEL	CC	ANNO YEAR	POSIZIONE POSITION
HONDA-HM			
CR E	50	1995-1998	R
HRD			
GS MC	80	1986-1988	R
GS-MC	125	1986-1988	R
GS-MC	250	1986-1988	R
HUSQVARNA			
CR	125	1984-1985	FL
WR	125	1985-1986	FL
WR	240	1984-1986	FL
CR	250	1984-1986	FL
ENDURO	400	1985-1986	FL
CR	500	1984-1986	FL
TC	500	1986-1987	FL
504	504	1983-1985	FL
ENDURO	510	1984-1986	FL
TE	510	1986-1987	FL
KTM			
COMET	50	1982-1985	FL
MX	50	1985-1987	FL
CHOPPER	80	1980-1984	FL
PL WATER COOLED	80	1987-1990	FL
PL WATER COOLED	80	1987-1990	R
LC	125	1985-1986	FL
LC	125	1986	R
MX	125	1985-1986	FL
MX	125	1986	R
XC	125	1985-1986	FL
XC	125	1986	R
LC	500	1983-1986	FL
LC	500	1986	R
MX	500	1983-1986	FL
MX	500	1986	R
XC	500	1983-1985	FL
LAVERDA			
GAUCHO	50	1990-1992	R
GAUCHO	50	1990-1992	FL
OR ATLAS	50	1986-1988	FL
LZ-ST-SP-FL	125	1982-1985	FL
NAVARRO	125	1990-1992	R
NAVARRO	125	1990-1992	R
GS LESMO	350	1986-1988	R
GS LESMO	350	1986-1988	R
OR ATLAS	600	1986-1990	R
OR ATLAS	600	1986-1990	R
GHOST	650	1996-1999	R
SPORT	650	1995-2001	R
S FORMULA	750	1998-2001	R
STRIKE	750	1998-2001	R
MONTESA			
COTA 315 R	250	1997	R
COTA 309	258	1989-1990	R
COTA 310	258	1990-1992	R
COTA 311	258	1992-1996	R
COTA 314	260	1997	R
MORINI			
DART	350	1987-1989	R
KANGURO	350	1987-1989	R

MODELLO MODEL	CC	ANNO YEAR	POSIZIONE POSITION
KANGURO	350	1987-1989	R
NEW YORK 350	350	1988-1994	R
CAMEL 501	500	1987-1989	R
CAMEL 501	500	1985-1986	FL
COGUARO 501	500	1989-1990	R
EXCALIBUR 501	500	1989-1994	R
KANGURO 501	500	1987-1990	R
NEW YORK 501	500	1989-1994	R
MOTO GUZZI			
BX	125	1990	R
BX	125	1990	FL
CUSTOM	125	1990	FL
TT	125	1985-1991	FL
NTX	350	1987-1993	R
NTX	350	1987-1993	FL
V35	350	1978-1983	R
V35	350	1978-1983	FL/FR
V35	350	1978-1983	R
V35 2-3-C-GT-IMOLA-FLORIDA	350	1982-1989	R
V35 2-3-C-GT-IMOLA-FLORIDA	350	1982-1989	FL/FR
V35 2-3-C-GT-IMOLA-FLORIDA	350	1982-1989	R
V35 TT ENDURO	350	1984-1989	R
V35 TT ENDURO	350	1984-1989	FL
V35 TT ENDURO	350	1984-1989	R
V50 C-2-3-MONZA-1-2-POLIZIA	500	1977-1985	R
V50 C-2-3-MONZA-1-2-POLIZIA	500	1977-1985	FL/FR
V50 C-2-3-MONZA-1-2-POLIZIA	500	1977-1985	R
NTX	650	1987	R
NTX	650	1987	FL
V65 GT-FLORIDA-CHOPPER-POLIZIA	650	1981-2007	R
V65 GT-FLORIDA-CHOPPER-POLIZIA	650	1981-2007	FL/FR
V65 GT-FLORIDA-CHOPPER-POLIZIA	650	1981-2007	R
V65 TT-BAJA-ENDURO	650	1984-1988	R
V65 TT-BAJA-ENDURO	650	1984-1988	FL
V65 TT-BAJA-ENDURO	650	1984-1988	R
LE MANS 1-2-3	750	1979-1985	R
NEVADA	750	1991-2002	R
NEVADA	750	1991-2002	FL/FR
NTX	750	1989-1994	R
TARGA	750	1989-1994	R
TARGA	750	1989-1994	FL/FR
DAYTONA IE	1000	1991-2000	R
QUOTA IE	1000	1995-1997	R
V10 CENTAURO	1000	1996-2001	R
V10 CENTAURO SPORT	1000	1998-2000	R
CALIFORNIA EV	1100	1996-2000	R
SPORT	1100	1996	R
V11 LE MANS	1100	2000-2005	R
V11 SPORT	1100	1997-2000	R
MOTRON			
XLE	50	1988-1993	R
MZ			
SKORPION	660	1994	R
TM			
GS- MC	80	1986-1989	R
GS- MC	125	1986-1989	R
YAMAHA			
SZR	660	1995-2001	R

613

CM55
- Sinterizzata stradale ant. uso sportivo
- Front sintered pad

CM56
- Sinterizzata stradale post. uso sportivo
- Rear sintered pad

SM1
- Semimetallica polivalente
- Semi-metallic pad

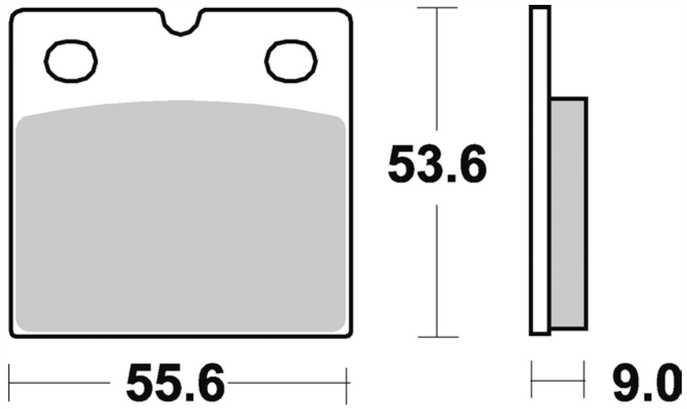

MODELLO MODEL	CC	ANNO YEAR	POSIZIONE POSITION
BENELLI			
504 SPORT	500	1978-1982	R
SEI	750	1975	FL
SEI	900	1984	FL
SEI	900	1984	R
SEI	900	1984	R
BIMOTA			
DB1	750	1986-1987	FL/FR
SB3	750	1980-1986	FL/FR
SB3	750	1980-1986	R
SB3	750	1980-1986	R
HB2	1100	1982-1983	FL/FR
HB2	1100	1982-1983	R
HB2	1100	1982-1983	R
SB4	1100	1983-1985	FL/FR
SB4	1100	1983-1985	R
SB4	1100	1983-1985	R
SB4S SB	1100	1983-1985	FL/FR
SB4S SB	1100	1983-1985	R
SB4S SB	1100	1983-1985	R
SB5S SP	1100	1984-1985	FL/FR
SB5S SP	1100	1984-1985	R
SB5S SP	1100	1984-1985	R
BMW			
R 65	650	1978-1980	FL
R 65 GS	650	1987	FL
R 65 LS	650	1982-1988	FL/FR
K 75	750	1984-1996	R
K 75	750	1984-1996	R
K 75 C	750	1985-1991	FL/FR
K 75 C	750	1985-1991	R
K 75 RT	750	1990-1996	R
K 75 S	750	1985-1988	R
K 75 S	750	1985-1992	FL/FR
K 75 S	750	1993-1996	R
K 75 S	750	1985-1988	R
K 75 S	750	1993-1996	R
PARIS DAKAR	800	1981-1987	FL/FR
R 80	800	1981-1993	FL/FR
R 80 GS	800	1981-1987	FR
R 80 GS	800	1991	FR
R 80 R	800	1991	R
R 80 RT	800	1983-1984	FL/FR
R 80 RT	800	1990-1994	FL/FR
R 90 TT	900	1981-1985	FL/FR
R 90 TT	900	1981-1985	R
R 90 TT	900	1981-1985	R
K 100	1000	1983-1989	FL/FR
K 100	1000	1983-1989	R
K 100	1000	1983-1989	R
K 100 LT ABS	1000	1990-1991	FL/FR
K 100 LT ABS	1000	1990-1991	R
K 100 LT ABS	1000	1990-1991	R
K 100 LT LIMITED	1000	1991-1992	FL/FR

MODELLO MODEL	CC	ANNO YEAR	POSIZIONE POSITION
K 100 LT LIMITED	1000	1991-1992	R
K 100 LT LIMITED	1000	1991-1992	R
K 100 RS	1000	1984-1989	FL/FR
K 100 RS	1000	1984-1989	R
K 100 RS	1000	1984-1989	R
K 100 RS 16V	1000	1989-1993	R
K 100 RT	1000	1984-1989	FL/FR
K 100 RT	1000	1984-1989	R
K 100 RT	1000	1984-1989	R
K1	1000	1989-1993	R
R 100	1000	1981-1989	FL/FR
R 100	1000	1981-1989	R
R 100	1000	1981-1989	R
R 100 CS	1000	1981-1989	FL/FR
R 100 CS	1000	1981-1989	R
R 100 CS	1000	1981-1989	R
R 100 R	1000	1992-1996	R
R 100 RS	1000	1976-1980	FL/FR
R 100 RT	1000	1984-1990	FL/FR
R 100 RT	1000	1991-1994	R
R 100 RT	1000	1976-1994	R
R 100 RT	1000	1976	R
R 100 RT	1000	1978-1994	R
R 100 S	1000	1976-1980	R
R 100 T	1000	1976-1980	R
K 1100 LT	1100	1992-2000	R
K 1100 RS	1100	1993-1996	R
R 1100 RS	1100	1993-2001	R
K 1200 GT ABS	1200	2002-2007	R
K 1200 RS	1200	1997-2006	R
DUCATI			
TL PANTAH	350	1985	FL/FR
TL PANTAH	350	1984	FL/FR
TL PANTAH	350	1984	R
XL PANTAH	350	1984	FL/FR
TL PANTAH	500	1985	FL/FR
TL PANTAH	600	1981-1985	FL/FR
DESMO	650	1987-1989	FL/FR
LAGUNA SECA	750	1987-1989	R
PASO	750	1987-1988	FL/FR
PASO	750	1987-1988	R
PASO	750	1987-1988	R
SANTAMONICA	750	1986-1990	FL/FR
SANTAMONICA	750	1986-1990	R
SANTAMONICA	750	1986-1990	R
SPORT	750	1988-1990	FL/FR
SPORT	750	1988-1990	R
SPORT	750	1988-1990	R
SS 900	900	1981-1984	FL/FR
SS 900	900	1981-1984	R
PASO 906	904	1989-1990	R
REPLICA	1000	1984-1985	FL/FR
LAVERDA			
GS LESMO	350	1986-1988	FL/FR

Le immagini hanno il solo scopo di presentare i prodotti.
The images used are aimed at presenting the products only.

FL > pastiglia anteriore sinistra / front left pad
FR > pastiglia anteriore destra / front right pad
R > pastiglia posteriore / rear pad

MODELLO MODEL	CC	ANNO YEAR	POSIZIONE POSITION
SFC	1000	1986-1988	FL/FR
SFC	1000	1986-1988	R
SFC	1000	1986-1988	R
MOTO GUZZI			
LE MANS 1-2-3	750	1979-1985	FL/FR
T3	850	1975-1985	FL/FR
T3	850	1975-1985	R
T4	850	1975-1985	FL/FR
T4	850	1975-1985	R
T5	850	1986	FL/FR
T5	850	1986	R
CONVERT	1000	1975-1984	FL/FR
CONVERT	1000	1975-1984	R
G5	1000	1978-1984	FL/FR
G5	1000	1978-1984	R
GT RL	1000	1987-1993	FL/FR
GT RL	1000	1987-1993	R

MODELLO MODEL	CC	ANNO YEAR	POSIZIONE POSITION
LE MANS	1000	1985-1988	FL/FR
LE MANS	1000	1985-1988	R
SP 1	1000	1978-1988	FL/FR
SP 1	1000	1978-1988	R
STRADA	1000	1993-1995	FL/FR
STRADA	1000	1993-1995	R
MZ			
ETZ	125	1982	FL
SPORTSTAR	125	1993	FL
ETZ	150	1982	FL
ETZ	250	1982	FL
ETZ	251	1989	FL
SPORTSTAR	251	1996	FL
ETZ	301	1990	FL
SPORTSTAR	301	1996	FL
SAXON COUNTRY- FUN	500	1992	FL
SILVER STAR CLASSIC	500	1993	FL

621

SM1
- Semimetallica polivalente
- Semi-metallic pad

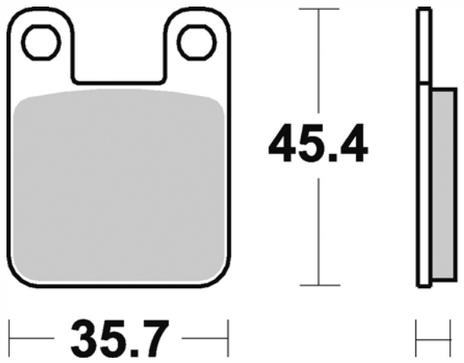

MODELLO MODEL	CC	ANNO YEAR	POSIZIONE POSITION
AGRATI G.			
TRIAL 323	323	1986-1987	FL
APRILIA			
RS	50	2006-2010	R
RX	50	2006-2010	R
SX	50	2006-2010	R
GP	125	1995-2000	R
GP REPLICA	125	1993	R
CLIMBER	250	1989-1992	FL
RSV - GP	250	1995-2006	R
CLIMBER 280 R	276	1993-1994	FL
TX 312	276	1987-1988	FL
BETA			
EIKON	50	1999-2006	FL
EIKON	50	1999-2006	R
MX ENDURO	50	1992-1995	FL
MX ENDURO	50	1992-1995	R
RR (AJP cal.)	50	1998	FL
RR (AJP cal.)	50	1998	R
RR ENDURO	50	1999-2007	R
RR ENDURO STANDARD	50	2009-2014	FL
RR MOTARD STANDARD	50	2009-2012	FL
RR STANDARD	50	2005-2008	R
RR SUPERMOTARD	50	1999-2005	R
RR SUPERMOTARD	50	2004-2005	FL
SUPERTRIAL	50	1997	FL
SUPERTRIAL	50	1997	R
EVO JUNIOR	80	2009-2014	FL
EVO JUNIOR	80	2009-2014	R
REV	80	2000-2007	FL
REV	80	2000-2007	R
ALP 4T	125	2000-2005	FL
ALP 4T	125	2000-2005	R
SYNT	125	1994-1996	FL
TECHNO	125	1994	FL

MODELLO MODEL	CC	ANNO YEAR	POSIZIONE POSITION
TR 35	125	1990-1993	FL
ZERO	125	1991-1992	FL
EIKON	150	1999	FL
EIKON	150	1999	R
ALP 4T	200	2000-2005	FL
ALP 4T	200	2000-2005	R
ALP	240	1992	FL
ALP	240	1996-1999	FL
TR 34-CAMPIONATO	240	1989	FL
EIKON	250	1999	FL
EIKON	250	1999	R
TECHNO	250	1994	FL
SYNT	260	1994-1996	FL
TR 35 REVERSE	260	1990-1993	FL
ZERO	260	1989-1992	FL
ZERO GARA	260	1993	FL
BULTACO			
LOBITO	50	1999-2006	R
DERBI			
ATLANTIS	50	1999-2002	FL
ATLANTIS 4t	50	2004-2006	FL
ATLANTIS BULLET	50	2003-2005	FL
ATLANTIS CITY	50	2003-2006	FL
ATLANTIS H^2O	50	2001	FL
ATLANTIS RED BULLET	50	2003	FL
ATLANTIS TWO CHIC	50	2005	FL
AVENTURA	50	1996	FL
BLACK DEVIL	50	2004	R
DRD RACING R	50	2005	R
DRD RACING SM	50	2005	R
FENIX	50	1994	FL
FENIX	50	1994	R
FURAX	50	1996	FL
FURAX	50	1996	R
GP1	50	2001-2004	FL

MODELLO MODEL	CC	ANNO YEAR	POSIZIONE POSITION
GP1	50	2001-2005	R
GP1 EURO2	50	2005	R
GP1 OPEN	50	2006-2011	R
GP1 RACE	50	2005-2007	R
GPR Nude	50	2004-2009	R
GPR R	50	1998-2000	R
GPR RACING	50	2004-2010	R
GPR REPLICA RACING	50	2002-2003	R
HUNTER	50	1997-1999	FL
MANHATTAN	50	1999	FL
PREDATOR LC	50	1999-2003	FL
PREDATOR LC	50	1999-2003	R
PREDATOR O2	50	1998-2001	FL
PREDATOR O2	50	1998-2001	R
RED BULLET	50	2004-2005	FL
SAVANNAH	50	1991	FL
SENDA DRD R	50	2003-2004	R
SENDA DRD RACING LTD SM	50	2005-2007	FL
SENDA DRD RACING LTD SM	50	2005-2007	R
SENDA DRD RACING R	50	2004-2010	R
SENDA DRD RACING SM	50	2004-2010	R
SENDA DRD SM	50	2003-2004	R
SENDA DRD SM	50	2005	FL
SENDA DRD SM	50	2005	R
SENDA L	50	1999	FL
SENDA L	50	1999	R
SENDA R	50	1996-2002	FL
SENDA R	50	1996-2002	R
SENDA X-RACE R	50	2005-2011	FL
SENDA X-RACE R	50	2005-2011	R
SENDA X-RACE SM	50	2006-2011	FL
SENDA X-RACE SM	50	2006-2011	R
SENDA X-TREME R	50	1994-2011	FL
SENDA X-TREME R	50	1994-2011	R
SENDA X-TREME SM	50	1999-2011	FL
SENDA X-TREME SM	50	1999-2011	R
ST PADDOCK	50	1996-1999	FL
STINGER	50	1996	FL
VAMOS R (A.J.P. cal.)	50	1995-1999	FL
VARIANT SPORT-R	50	2001	FL
X-RACE	50	2005	FL
X-RACE	50	2005	R
GPR CUP	80	2004-2005	R
ATLANTIS 2T	100	2000-2001	FL
ATLANTIS 4t	100	2004-2006	FL
GPR	125	2005-2008	R
GPR Nude	125	2005-2008	R
PREDATOR	125	1999	FL
SENDA R 4t	125	2004-2008	R
FANTIC M.			
50-5	50	1989-1991	FL
K-ROO	50	1992-2000	FL
SECTION	50	1996-2000	FL
SECTION	50	1996-2000	R
TRIAL	50	1989-1995	FL
SECTION	80	1996-2000	FL
SECTION	80	1996-2000	R
TRIAL	125	1988-1994	FL
TRIAL	125	1988-1994	R
TRIAL 245	240	1989-1990	FL
TRIAL 245	240	1989-1990	R
TRIAL 247	240	1990-1991	FL
TRIAL 247	240	1990-1991	R
SECTION	249	1996-2000	FL
SECTION	249	1996-2000	R
COACH	250	1992-2000	FL
COACH	250	1992-2000	R
K-ROO	250	1991-1995	FL
K-ROO	250	1991-1995	R
TRIAL 305	250	1988-1989	FL
TRIAL 305	250	1988-1989	R
TRIAL 307	250	1989-1991	FL
TRIAL 307	250	1989-1991	R
TRIAL 309	250	1990-1993	FL
TRIAL 309	250	1990-1993	R
GAS GAS			
TXT BOY	50	2004	FL
TXT BOY	50	2004	R
PAMPERA	125	1998-1999	FL
PAMPERA	125	1998-1999	R
PAMPERA 4T	125	2000-2003	FL
PAMPERA 4T	125	2000-2003	R

MODELLO MODEL	CC	ANNO YEAR	POSIZIONE POSITION
GT 25	250	1990-1992	FL
GT 25	250	1990-1992	R
JTX	250	1997	FL
JTX	250	1997	R
PAMPERA	250	1996-1999	FL
PAMPERA	250	1996-1999	R
CONTAC T25	260	1993-1996	FL
CONTAC T25	260	1993-1996	R
JTX	320	1997	FL
JTX	320	1997	R
JTR	370	1996	FL
JTR	370	1996	R
PAMPERA	370	1998-2001	FL
PAMPERA	370	1998-2001	R
GILERA			
GSM	50	2000-2003	FL
GSM	50	2000-2003	R
RCR	50	2004-2005	FL
RCR	50	2004-2005	R
SMT	50	2004-2005	FL
SMT	50	2004-2005	R
ZULU	50	2001-2002	FL
ZULU	50	2001-2002	R
HONDA-HM			
CRE BAJA	50	2001-2002	R
CRE DERAPAGE	50	2001-2002	R
HUSQVARNA			
WRS	50	1998	FL
WXE	50	2000	R
ITALJET			
DRAGSTER	50	1998	FL
DRAGSTER	50	1998	R
FORMULA L.C.	50	1998	FL
FORMULA L.C.	50	1998	R
TORPEDO	50	1998	FL
DRAGSTER	125	1999-2001	FL
DRAGSTER	125	1999-2001	R
JET SET	125	2002	FL
TORPEDO	125	1999	FL
DRAGSTER	180	1999-2001	FL
DRAGSTER	180	1999-2001	R
KTM			
EXC	50	1999	R
SX	60	1999-2000	FL
SX	65	1998-2001	FL
MALAGUTI			
DRAKON NKD	50	2005-2009	R
XTM	50	2003	FL
XTM	50	2003	R
MBK			
X-POWER	50	2004-2010	R
MONTESA			
COTA	50	1989	FL
COTA 304	125	1986-1990	FL
COTA 315 R	250	1997	FL
COTA 304	258	1986-1989	FL
COTA 307	258	1987-1990	FL
COTA 307	258	1987-1990	R
COTA 309	258	1989-1990	FL
COTA 310	258	1990-1992	FL
COTA 311	258	1992-1996	FL
COTA 330	258	1985-1987	FL
COTA 330	258	1985-1987	R
COTA 335	258	1987-1989	FL
COTA 335	258	1987-1989	R
EVASION	258	1991	FL
EVASION	258	1991	R
COTA 314	260	1997	FL
PEUGEOT			
ELYSEO (A.J.P.)	50	1998-2000	FL
JET FORCE	50	2003	FL
JET FORCE	50	2003	R
LOOXOR	50	2001	FL
LUDIX	50	2004	FL
SPEEDFIGHT 2 A/C	50	2001	FL
SPEEDFIGHT 2 L/C DD	50	2001	FL
SPEEDFIGHT 2 L/C DD	50	2001	R
SQUAB (AJP)	50	1994-2001	FL
TKR	50	2005	FL
TREKKER (AJP)	50	1997	FL
VIVACITY (AJP)	50	1999	FL
XP6 TRAIL	50	2004	FL

Le immagini hanno il solo scopo di presentare i prodotti.
The images used are aimed at presenting the products only.

FL > pastiglia anteriore sinistra / front left pad
FR > pastiglia anteriore destra / front right pad
R > pastiglia posteriore / rear pad

MODELLO MODEL	CC	ANNO YEAR	POSIZIONE POSITION
XP6 TRAIL	50	2004	R
XPS ENDURO	50	2002	FL
XPS ENDURO	50	2002	R
XPS SM	50	2004	R
XR6 RACE SPEC	50	2002	R
XR6 STREET	50	2005	R
ELYSEO	100	2002	FL
ELYSEO	100	2002	R
ELYSEO (A.J.P.)	100	1998-2001	FL
LOOXOR	100	2001	FL
LOOXOR	100	2001	R
SPEEDFIGHT	100	1997	FL
SPEEDFIGHT	100	1997	R
TREKKER	100	1998	FL
VIVACITY (AJP)	100	1999-2004	FL
ELYSEO (A.J.P.)	125	1999	FL
LOOXOR	125	2001-2004	FL
LOOXOR	125	2001-2004	R
LUDIX	125	2004	FL
LOOXOR	150	2002	FL
LOOXOR	150	2002	R
PIAGGIO			
DIESIS	50	2001-2005	FL
DIESIS	100	2001-2003	FL
RIEJU			
DRAC	50	1997	FL
DRAC	50	1997	R
FIRST- H²O	50	1997	FL
MRX PRO	50	2005	R
MRX RACING	50	2003	FL
MRX RACING	50	2003	R
NKD	50	2007	R
RACING SPEC EDITION	50	2001	R
RS1	50	1997-2000	FL
RS1	50	1997-2004	R
SPIKE RACING	50	2002	R

MODELLO MODEL	CC	ANNO YEAR	POSIZIONE POSITION
MR C- E	80	1988	FL
MRX PRO	125	2002-2006	R
MRX RACING	125	2002-2006	FL
MRX RACING	125	2002-2006	R
RR	125	1997	FL
RR	125	1997	R
RST	125	2001	FL
RST	125	2001	R
SMX	125	2002-2008	R
SACHS			
MAD ASS 4T	50	2005	R
SCORPA			
SY F	125	2006-2007	FL
TY-S F	125	2006-2007	FL
SY F	175	2006-2007	FL
TY-S F	175	2006-2007	FL
SHERCO			
1.25	125	1999-2002	FL
1.25	125	1999-2002	R
2.5	250	1999-2002	FL
2.5	250	1999-2002	R
2.9	290	1999-2005	FL
2.9	290	1999-2005	R
SUZUKI			
CONDOR	50	1989	FL
DR	50	1988-1993	FL
DR BIG	50	1989	FL
DR LC	50	1994	FL
RMX	50	2000	FL
RMX	50	2000	R
YAMAHA			
DT R	50	2004	FL
DT SM	50	2005-2006	R
TZR	50	2003-2011	R
TY	250	1993	FL
TY	250	1993	R

644

SM1
- Semimetallica polivalente
- Semi-metallic pad

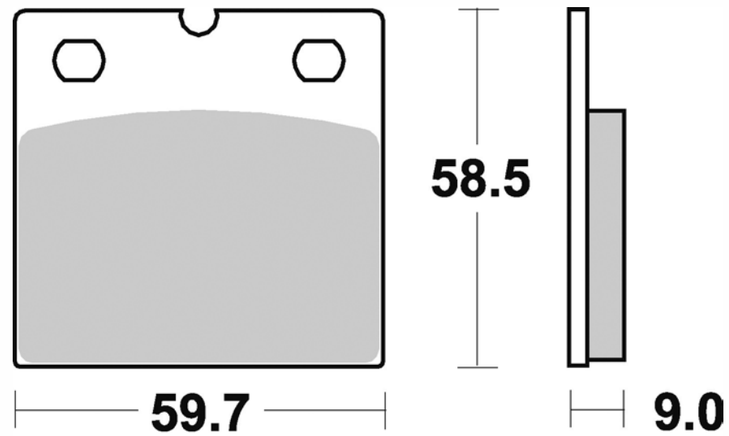

MODELLO MODEL	CC	ANNO YEAR	POSIZIONE POSITION
BENELLI			
SEI	900	1981-1983	FL
BMW			
R 65	650	1986-1989	FL
K 75	750	1984-1996	FL/FR
K 75 S	750	1993-1996	FL/FR
R 80 GS PARIS DAKAR	800	1988-1994	FR

MODELLO MODEL	CC	ANNO YEAR	POSIZIONE POSITION
R 80 RT	800	1985-1989	FL/FR
R 100 GS	1000	1987-1994	FR
R 100 R MYSTIC	1000	1991-1995	FL/FR
R 100 RT	1000	1991-1994	FL/FR
DUCATI			
PASO 906	904	1989-1990	FL/FR

622

SM1
- Semimetallica polivalente
- Semi-metallic pad

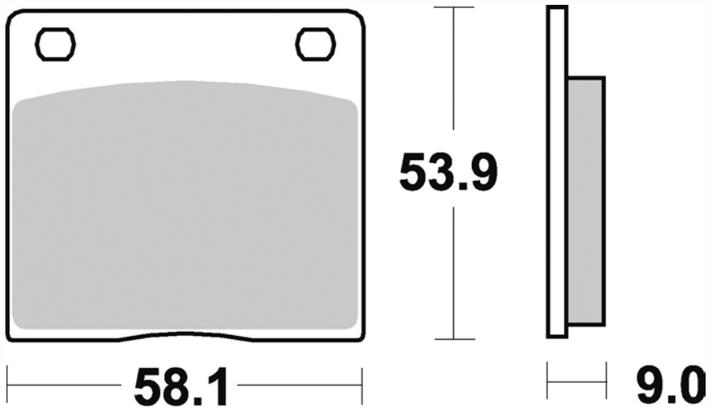

MODELLO MODEL	CC	ANNO YEAR	POSIZIONE POSITION
SUZUKI			
GSX	400	1981-1987	R
GS E	550	1980-1983	R
GS ME Katana	550	1981-1983	R
GS	650	1981-1986	R
GS E	700	1985-1988	R
GS ES	700	1985-1988	R
GS	750	1980-1983	R
GS KATANA	750	1982-1986	R
GSX	750	1980-1986	R
GSX S KATANA	750	1982-1988	R
GS	850	1980-1985	R

MODELLO MODEL	CC	ANNO YEAR	POSIZIONE POSITION
XN 85 D TURBO	850	1983-1985	R
GS	1000	1980-1981	R
GS EX	1000	1981-1982	R
GSX	1000	1982-1983	R
GSX KATANA	1000	1982-1983	R
GS	1100	1982-1984	R
GS G	1100	1985-1986	R
GSX	1100	1980-1983	R
GSX KATANA	1100	1982-1987	R
GV MADURA	1200	1985	R
CAVALCADE	1400	1985-1986	R

645

SM1
- Semimetallica polivalente
- Semi-metallic pad

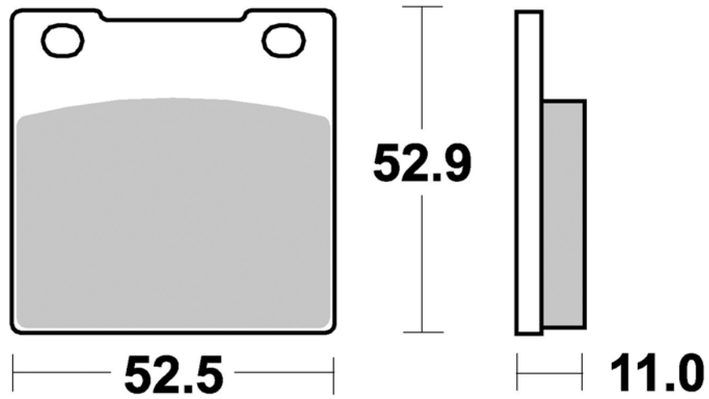

MODELLO MODEL	CC	ANNO YEAR	POSIZIONE POSITION
HONDA			
CB	250	1983-1984	FL
CB	750	1982-1984	FL/FR
CB C	750	1980-1981	FL/FR
SUZUKI			
RG	250	1983-1986	FL

MODELLO MODEL	CC	ANNO YEAR	POSIZIONE POSITION
RG	250	1983-1987	R
GS	400	1989	R
GSF BANDIT	400	1989-1992	R
GSX R	750	1985-1988	R
GSX R LIMITED EDITION	750	1989-1990	R
GSX R	1100	1987-1988	R

Le immagini hanno il solo scopo di presentare i prodotti.
The images used are aimed at presenting the products only.

FL > pastiglia anteriore sinistra / front left pad
FR > pastiglia anteriore destra / front right pad
R > pastiglia posteriore / rear pad

646

SM1
- Semimetallica polivalente
- Semi-metallic pad

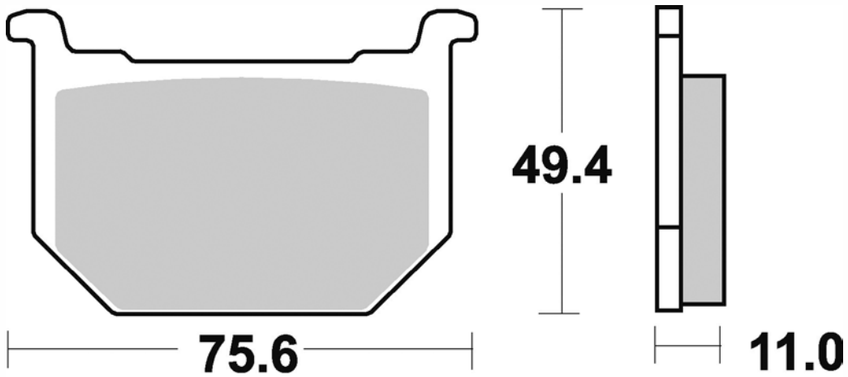

MODELLO MODEL	CC	ANNO YEAR	POSIZIONE POSITION
SUZUKI			
GN	250	1991	FL
GSX	400	1981-1987	FL/FR
GS L	450	1982-1983	FL
GS T	450	1982-1983	FL
GS E	550	1980-1983	FL/FR
GS E	700	1985-1988	FL/FR
GS ES	700	1985-1988	FL/FR

MODELLO MODEL	CC	ANNO YEAR	POSIZIONE POSITION
GV MADURA	700	1984-1987	FL/FR
GS	750	1980-1983	FL/FR
GSX	750	1980-1986	FL/FR
GSX S KATANA	750	1982-1985	FL/FR
GS	850	1980-1985	FL/FR
GS	1000	1980-1981	FL/FR
GV MADURA	1200	1985	FR

648

SM1
- Semimetallica polivalente
- Semi-metallic pad

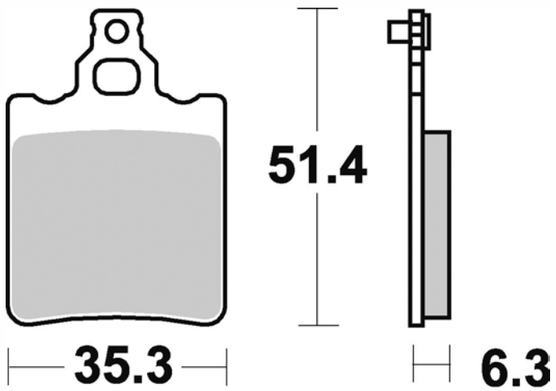

MODELLO MODEL	CC	ANNO YEAR	POSIZIONE POSITION
AGRATI G.			
STRADA GTA	125	1983-1985	FL
TIGER XLE	125	1986-1988	R
APRILIA			
AF1	50	1986-1989	R
AF1 FUTURA - AE	50	1990	R
AF1 REPLICA	50	1989-1990	R
EUROPA	50	1990-1995	R
MX	50	2003	R
RS Extrema	50	1996-1998	R
RS REPLICA	50	1999-2006	R
RX	50	1989-2004	R
RX RACING	50	2004-2006	R
TUAREG RALLY	50	1991-1994	R
TUONO	50	2003-2007	R

MODELLO MODEL	CC	ANNO YEAR	POSIZIONE POSITION
AF1	125	1985-1986	FR
AF1	125	1985-1986	R
TUAREG WIND	125	1988-1989	R
CLIMBER	250	1989-1992	R
CLIMBER 280 R	276	1993-1994	R
TX 312	276	1987-1988	R
BENELLI			
BXK	125	1988-1994	R
BETA			
KR ADVENTURE	50	1987-1989	FL
KR ADVENTURE	50	1987-1989	R
MX	50	1990-1994	FL
MX	50	1990-1994	R
RK-6	50	1994-1997	R
RR (Grimeca cal.)	50	1994-1997	R
4.0 Alp	350	2003-2005	R

MODELLO MODEL	CC	ANNO YEAR	POSIZIONE POSITION
CAGIVA			
K3	50	1992-1993	R
COCIS	80	1989-1991	R
DAKAR	125	1988-1989	R
ELECTRA	125	1984-1988	FL
LUCKY EXPLORER	125	1988-1989	R
SST	125	1981-1982	FL
SST LOW RIDER	125	1983-1986	FL
SXT	125	1981-1983	FL
FANTIC M.			
KOALA	50	1988-1995	FL
KOALA	50	1988-1995	R
OASIS	50	1988-1990	FL
OASIS	50	1988-1990	R
RC CABALLERO	50	1990-1993	R

MODELLO MODEL	CC	ANNO YEAR	POSIZIONE POSITION
HP1 SPORT	125	1985-1988	FL
KTM			
SX	65	1998-2003	R
MX	80	2000-2002	R
LAVERDA			
GS LESMO	125	1986-1990	FL/FR
GS LESMO	125	1986-1990	R
LB SPORT	125	1984-1988	FL
LB STRADA	125	1984-1988	FL
LB1	125	1985-1988	FL
LZ CUSTOM	125	1983-1986	FL
LZ ELEGANT	125	1984-1985	FL
MALAGUTI			
MRX	50	1989-1998	FL

653

SM1
- Semimetallica polivalente
- Semi-metallic pad

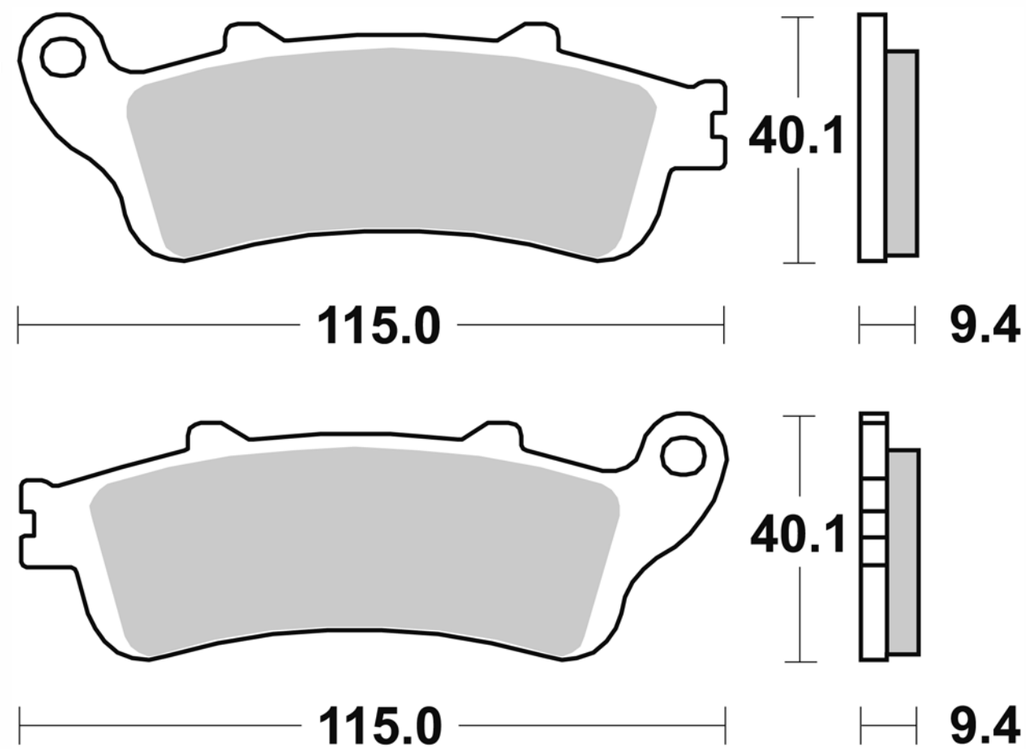

MODELLO MODEL	CC	ANNO YEAR	POSIZIONE POSITION
HONDA			
PANTHEON	125	2003-2007	FL
PANTHEON	150	2003-2007	FL
FORESIGHT	250	1998-2007	FL
ST PAN EUROPEAN ABS-CBS-TCS	1100	1996-2001	R

Le immagini hanno il solo scopo di presentare i prodotti.
The images used are aimed at presenting the products only.

FL > pastiglia anteriore sinistra / front left pad
FR > pastiglia anteriore destra / front right pad
R > pastiglia posteriore / rear pad

654

SM1
- Semimetallica polivalente
- Semi-metallic pad

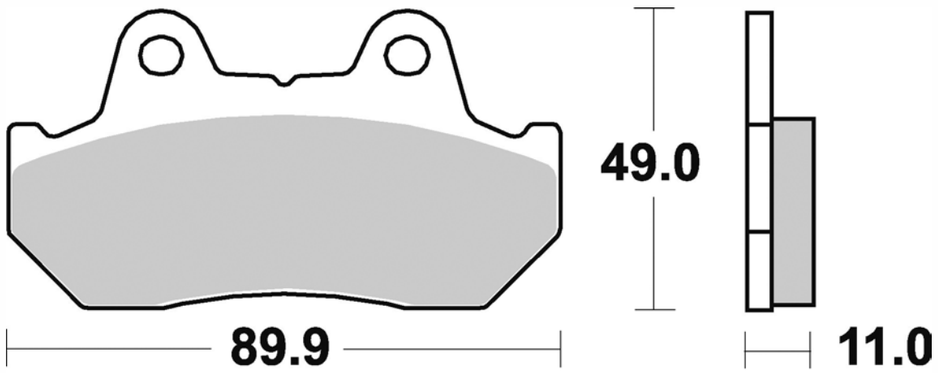

MODELLO MODEL	CC	ANNO YEAR	POSIZIONE POSITION
HONDA			
CBX CUSTOM	125	1988-1990	FL
CBX RSE (Rear Drum Model)	250	1984-1986	FR
CN	250	1987-1998	FL
GB CLUBMAN	250	1988	FL
NS R	250	1985-1986	FL/FR
NS R	250	1985-1986	R
NSR R	250	1987	R
CB	400	1981-1985	R
CB FOUR	400	1981-1983	FL/FR
CB FOUR	400	1981-1983	R
CB N	400	1982-1985	FL/FR
CBR F	400	1985-1987	FL/FR
CBR F	400	1985-1987	R
CBR F2	400	1985-1987	FL/FR
CBR F2	400	1985-1987	R
CBR R	400	1987-1988	R
NSR	400	1985-1988	FL/FR
NSR	400	1985-1988	R
VF F INTEGRA	400	1982-1986	FR
VF F INTEGRA	400	1982-1986	R
VFR R	400	1986	R
VFR Z	400	1986-1987	R
CM	450	1982-1985	FR
CMX	450	1986-1988	FR
CB EC	500	1983-1984	FR
CB EC	500	1983-1984	R
CX E	500	1982-1986	FL/FR
CX E	500	1982-1986	R
CX TURBO	500	1981-1983	FL/FR
CX TURBO	500	1981-1983	R
FT	500	1982-1983	FR
FT	500	1982-1983	R
NS R	500	1985-1987	FL/FR
NS R	500	1985-1987	R
VF F	500	1984-1987	FL/FR
VF F	500	1984-1987	R
VT C	500	1982-1983	FR
VT C	500	1984-1986	FL
VT C	500	1985-1986	R
XBR S	500	1985-1989	FL
CB	550	1983-1985	FR
CBX F	550	1982-1984	FR
CBX F	550	1982-1984	R
CBR F	600	1987-1988	R
XL LM	600	1985-1988	FL
XL RM	600	1985-1988	FL
XL V TRANSALP (Rear Drum Model)	600	1987-1990	FL
CB NIGHTHAWK	650	1982-1983	FL/FR
CBX	650	1983-1984	FL/FR
CX E	650	1983-1985	FL/FR

MODELLO MODEL	CC	ANNO YEAR	POSIZIONE POSITION
CX E	650	1983-1985	R
CX TURBO	650	1983-1985	FL/FR
CX TURBO	650	1983-1985	R
GL	650	1983-1985	FL/FR
CB C	750	1982-1984	FL/FR
CB F	750	1980-1986	FL/FR
CB F	750	1981-1986	R
CB F2	750	1981-1986	FL/FR
CB F2	750	1981-1986	R
CB K	750	1981-1986	FL/FR
CB K	750	1981-1986	R
CBR HURRICANE	750	1987-1989	R
CBX F	750	1983-1988	FL/FR
CBX F	750	1983-1988	R
VF C	750	1982-1985	FR
VF C MAGNA	750	1988-1992	FR
VF F	750	1983-1987	FL/FR
VF SPORT	750	1982-1984	FL/FR
VFR F	750	1986-1987	R
VP CUSTOM-CH	750	1987-1988	FL/FR
XLV R	750	1983-1987	FL/FR
VT SHADOW	800	1988-1990	FR
CB	900	1981-1985	FL/FR
CB	900	1981-1985	R
CB	1000	1983-1985	FL/FR
CB	1000	1983-1985	R
CBR F	1000	1987-1988	R
CBX	1000	1981-1983	FL/FR
CBX	1000	1981-1983	R
VF F	1000	1984-1988	FL/FR
VF F	1000	1984-1988	R
VF R	1000	1986-1987	FL/FR
VF R	1000	1986-1987	R
VT C	1000	1987-1988	FR
VT C	1000	1987-1988	R
CB R	1100	1981-1986	FL/FR
CB R	1100	1981-1986	R
GL GOLD WING	1100	1982-1983	FL/FR
GL GOLD WING	1100	1982-1983	R
VF C	1100	1983-1985	FL/FR
VF C	1100	1983-1985	R
VT SHADOW	1100	1988-1991	FR
GL	1200	1984-1988	FL/FR
GL	1200	1984-1988	R
GL DX	1200	1983-1987	FL/FR
GL DX	1200	1983-1987	R
GL GOLD WING	1200	1984-1987	FR
GL GOLD WING	1200	1984-1987	R
GL GOLD WING	1500	1988-2000	R
GLX SE	1500	1990-2000	R

658

SM1
- Semimetallica polivalente
- Semi-metallic pad

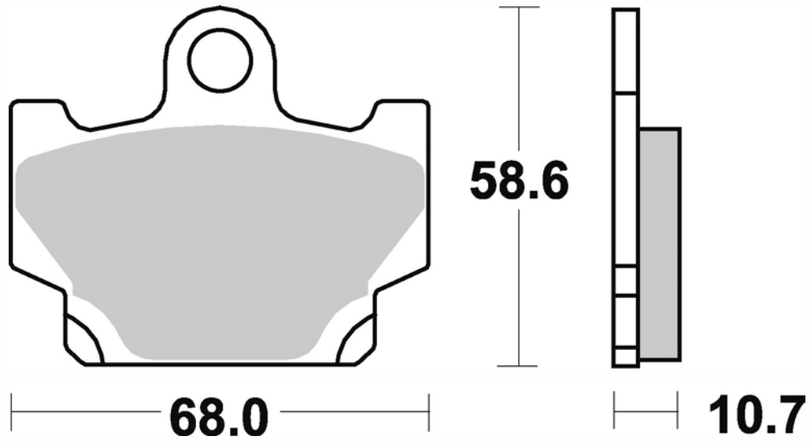

MODELLO MODEL	CC	ANNO YEAR	POSIZIONE POSITION
YAMAHA			
RD	80	1985-1986	FL
RD LC	125	1982-1984	FL
RD LC	250	1983-1986	FL
RD LC	350	1983-1984	FL/FR
XS	400	1982-1985	FR

MODELLO MODEL	CC	ANNO YEAR	POSIZIONE POSITION
XV VIRAGO	500	1983-1985	FL
XZ R	550	1982-1983	FL/FR
XZ R	550	1983-1984	FL/FR
XT 4 VALVES	600	1984-1985	FL
XT TENERE	600	1983-1985	FL
XJ TURBO	650	1981-1985	FL/FR

661

SM1
- Semimetallica polivalente
- Semi-metallic pad

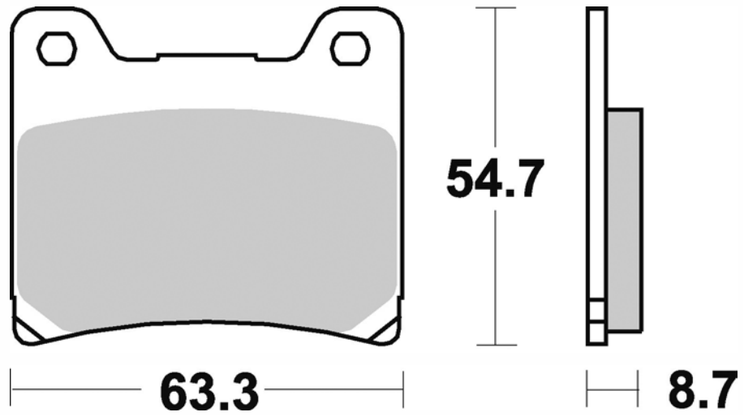

MODELLO MODEL	CC	ANNO YEAR	POSIZIONE POSITION
YAMAHA			
TZR	125	1989-1992	FR
TZR	125	1993-1994	R
FZ FAZER	250	1985-1986	FL/FR
RD LC	250	1983-1986	R
RD LC	350	1983-1984	R
RD LC	350	1985	FL/FR
FZ R	400	1985-1987	FL/FR
SRX	400	1991	R
XJR	400	1995-2000	R
XS Z	400	1983-1985	FR
XS Z	400	1983-1985	R
RD LC	500	1984-1988	FL/FR
FZ	600	1987-1988	FL/FR
FZR	600	1989	FL/FR

MODELLO MODEL	CC	ANNO YEAR	POSIZIONE POSITION
FZR	600	1989	R
FZR R	600	1990-1995	R
XJ	600	1983-1991	FL/FR
XJ	600	1983-1991	R
YZF R THUNDERCAT	600	1996-2004	R
FZ	700	1987-1989	FL/FR
FZX FAZER	700	1987-1988	FL/FR
FZX FAZER	700	1987-1988	R
FZ GENESIS	750	1987-1988	FL/FR
FZ GENESIS	750	1987-1992	R
FZR R	750	1989-1992	R
FZR R GENESIS	750	1987-1988	R
FZX FAZER	750	1986-1990	FL/FR
FZX FAZER	750	1986-1990	R
XJ	750	1983-1988	FL/FR
XJ	750	1983-1988	R

Le immagini hanno il solo scopo di presentare i prodotti.
The images used are aimed at presenting the products only.

FL > pastiglia anteriore sinistra / front left pad
FR > pastiglia anteriore destra / front right pad
R > pastiglia posteriore / rear pad

MODELLO MODEL	CC	ANNO YEAR	POSIZIONE POSITION
YZF R	750	1993-1997	R
YZF SP	750	1993-1997	R
TDM	850	1991-2001	R
TRX	850	1995-2000	R
XJ	900	1983-1990	FL/FR
XJ	900	1983-1990	R
XJ S DIVERSION	900	1994-1996	R
XV VIRAGO	920	1981-1982	R
FZR EXUP	1000	1990-1995	R
FZR GENESIS	1000	1987-1989	R
GTS	1000	1993-1996	R
XV VIRAGO	1000	1984-1985	R
XV VIRAGO	1000	1984-1988	FL/FR
YZF R THUNDERACE	1000	1996-1998	R

MODELLO MODEL	CC	ANNO YEAR	POSIZIONE POSITION
FJ	1100	1984-1985	FL/FR
FJ	1100	1984-1985	R
XV VIRAGO (Rear Drum Model)	1100	1986-1993	FL/FR
XVS DRAG STAR	1100	1999-2006	R
FJ	1200	1986-1987	FL/FR
FJ	1200	1986-1995	R
FJ ABS	1200	1991-1993	R
V MAX	1200	1986-1992	FL/FR
V MAX	1200	1986-2006	R
XJR	1200	1995-1997	R
XVZ VENTURE ROYALE	1200	1984-1987	FL/FR
XVZ VENTURE ROYALE	1200	1984-1987	R
XJR	1300	1998-2001	R

662

SM1
- Semimetallica polivalente
- Semi-metallic pad

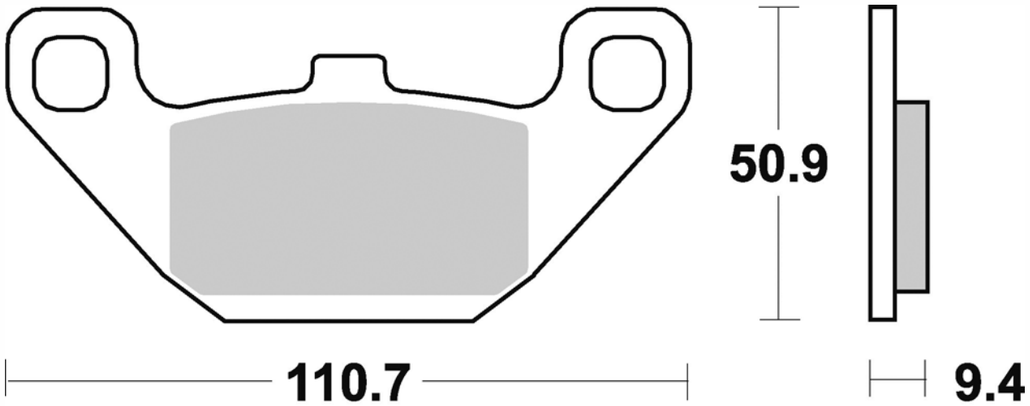

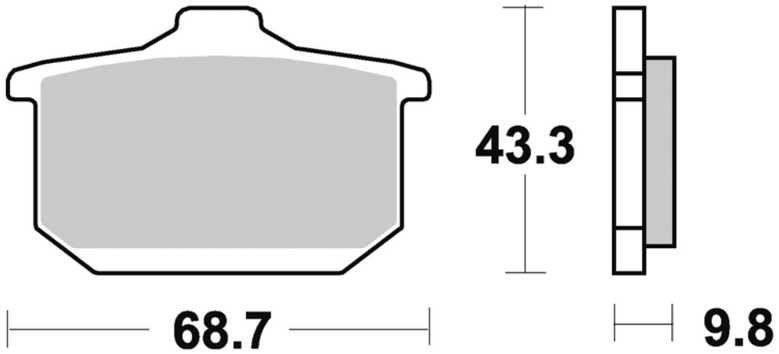

MODELLO MODEL	CC	ANNO YEAR	POSIZIONE POSITION
KAWASAKI			
ELIMINATOR	250	1990-1998	FL
EX R NINJA	250	1986-1987	FL
EX R NINJA	250	1986-1987	R
GPX R	250	1986-1987	FL
GPX R	250	1986-1987	R
KR	250	1985	R
GPZ	305	1982-1984	FL/FR
ELIMINATOR	400	1988-1989	FL/FR
ELIMINATOR	400	1988-1989	R
EN VULCAN	400	1985-1986	FL
FX R	400	1986-1987	R
ZX	400	1986-1987	FL
ZX	400	1986-1987	R
Z 450	450	1985-1986	FR
EN VULCAN	500	1990-1996	FR

MODELLO MODEL	CC	ANNO YEAR	POSIZIONE POSITION
GPZ S	500	1989-1992	R
KZ F	550	1985-1986	FL/FR
KZ GP	550	1984-1985	FL/FR
KZ GP	550	1984-1985	R
KZN	550	1984-1985	FL/FR
KZN	550	1984-1985	R
ELIMINATOR	600	1986-1994	FL
GPZ R	600	1984-1990	FL/FR
GPZ R	600	1984-1990	R
KZ GP	600	1983	FL/FR
KZ GP	600	1983	R
KZN	700	1984-1985	FL/FR
KZN	700	1984-1985	R
ELIMINATOR	750	1988-1989	FL/FR
ELIMINATOR	750	1988-1989	R
GPZ R	750	1985-1987	FL/FR

MODELLO MODEL	CC	ANNO YEAR	POSIZIONE POSITION
GPZ R	750	1985-1987	R
GPZ TURBO	750	1983-1985	FL/FR
GPZ TURBO	750	1983-1985	R
GPZ UNITRAK	750	1983-1988	FL/FR
GPZ UNITRAK	750	1983-1988	R
GTR	750	1985-1986	FL/FR
GTR	750	1985-1986	R
VN	750	1989-1990	FL
VN TWIN	750	1986-1988	FL/FR
VZ TWIN	750	1988-1989	FL
Z 750LTD	750	1983-1984	FL/FR
Z 750LTD	750	1983-1984	R
Z 750TURBO	750	1984-1986	FL/FR
Z 750TURBO	750	1984-1986	R
Z GP	750	1983-1985	FL/FR
Z GP	750	1983-1985	R
ZX	750	1983-1985	FL/FR
ZX	750	1983-1985	R
VN	800	1994-1998	FL
VN	800	1994-1998	R
ELIMINATOR	900	1985-1987	FL/FR
ELIMINATOR	900	1985-1987	R
GPZ	900	1984-1986	FL/FR
GPZ	900	1984-1986	R
GPZ R	900	1984-1986	FL/FR
GPZ R	900	1984-1986	R
ZX	900	1983-1984	FL/FR
ZX	900	1983-1984	R
ELIMINATOR	1000	1986-1990	FL/FR
ELIMINATOR	1000	1986-1990	R
GPX R	1000	1986-1989	FL

MODELLO MODEL	CC	ANNO YEAR	POSIZIONE POSITION
GPX R	1000	1986-1989	R
GPZ RX	1000	1986-1989	FL/FR
GPZ RX	1000	1986-1989	R
GTR	1000	1986-1993	FL/FR
GTR	1000	1986-2006	R
ZG A CONCOURSE	1000	1986-1993	FL/FR
ZG A CONCOURSE	1000	1986-1993	R
ZG A CONCOURSE	1000	1994-2006	R
ZR	1000	1986-1987	FL/FR
ZR	1000	1986-1987	R
GPZ	1100	1983-1988	FL/FR
GPZ	1100	1983-1988	R
Z 1100 LTD	1100	1985-1987	FL/FR
Z 1100 LTD	1100	1985-1987	R
Z 1100R	1100	1984-1985	FL/FR
Z 1100R	1100	1984-1985	R
ZN VOYAGER	1100	1984-1986	FL/FR
ZN VOYAGER	1100	1984-1986	R
ZX	1100	1983-1985	FL/FR
ZX	1100	1983-1985	R
ZG A CONCOURSE	1200	1986-1997	FL/FR
ZG A CONCOURSE	1200	1986-1997	R
Z 1300	1300	1985-1987	FL/FR
Z 1300	1300	1985-1987	R
ZN VOYAGER	1300	1983-1987	FL/FR
ZN VOYAGER	1300	1983-1987	R
VN	1500	1987-1996	FL/FR
VN	1500	1987-1996	R
VN CLASSIC	1500	1996-2007	R
VN CLASSIC TOURER	1500	1998	R
VN VULCAN NOMAD	1500	1998-2001	R

667

CM44
- Sinterizzata off-road
- Offroad sintered pad

P30
- Sinterizzata scooter
- Scooter sintered pad

SM1
- Semimetallica polivalente
- Semi-metallic pad

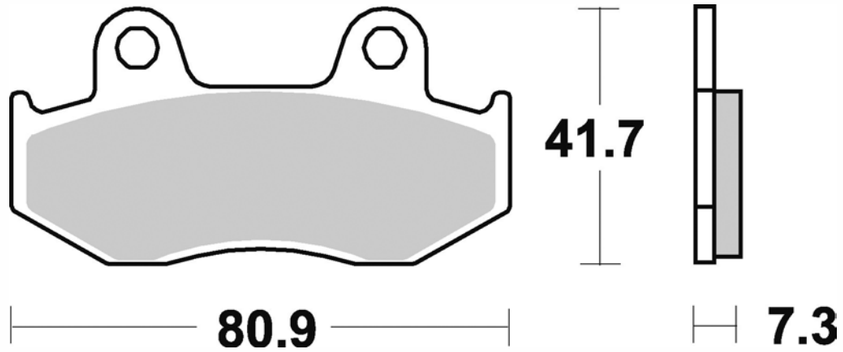

MODELLO MODEL	CC	ANNO YEAR	POSIZIONE POSITION
HONDA			
MBX	80	1986	FL
MTX R	80	1987	FL
NEW LEAD	107	2008	FL
@ NES (Rear Drum Model)	125	2001-2006	FL
CR E	125	1985-1986	FL
CR R	125	1984-1986	FL
DYLAN	125	2002	FL
MTX R	125	1984-1988	FL
PSi	125	2006	FL
SH (Rear Drum Model)	125	2001-2004	FL
SH i (Rear Drum Model)	125	2005-2008	FL
XL R	125	1986-1990	FL
@ NES (Rear Drum Model)	150	2001-2006	FL
DYLAN	150	2002	FL
PSi	150	2006	FL
SH (Rear Drum Model)	150	2001-2004	FL
SH i (Rear Drum Model)	150	2005-2008	FL
ATC R	250	1985-1986	FL/FR
ATC R	250	1985-1986	R
ATC X	250	1986	FL/FR
CB	250	1985-1987	FL

MODELLO MODEL	CC	ANNO YEAR	POSIZIONE POSITION
CH SPACY	250	1985	FL
CR E	250	1985-1986	FL
CR R	250	1984-1986	FL
FTR	250	1986-1988	FR
FTR	250	1986-1988	R
SPACY FREEWAY FUSION	250	1988	FL
TRX R	250	1986-1989	R
XL R	250	1984-1992	FL
XR R	250	1984-1987	FL
ATC X	350	1985	FL/FR
XL R	350	1984-1991	FL
XL X	350	1989	FL
XR R	350	1984-1985	FL
CBR RR	400	1988-1990	R
CR E	500	1985-1986	FL
CR R	500	1984-1986	FL
XR R	500	1983-1986	FL
XL R	600	1983-1987	FL
XR R (Rear Drum Model)	600	1983-1987	FL
SUZUKI			
BURGMAN	400	1999-2000	R

Le immagini hanno il solo scopo di presentare i prodotti.
The images used are aimed at presenting the products only.

FL > pastiglia anteriore sinistra / front left pad
FR > pastiglia anteriore destra / front right pad
R > pastiglia posteriore / rear pad

669

CM44
- Sinterizzata off-road
- Offroad sintered pad

SM1
- Semimetallica polivalente
- Semi-metallic pad

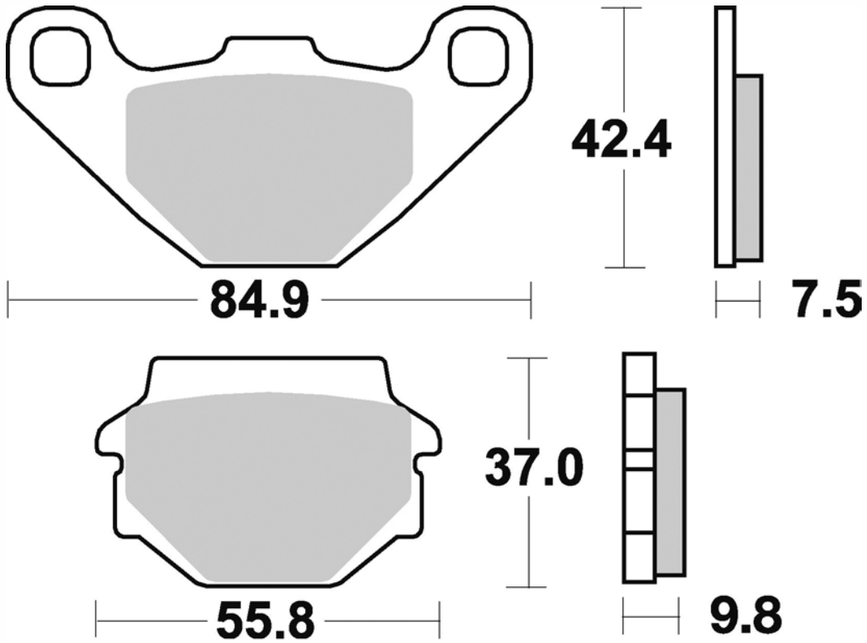

MODELLO MODEL	CC	ANNO YEAR	POSIZIONE POSITION
AEON			
AERO	50	2006	FL/FR
REGAL	50	2006	FL/FR
TORCH	50	2006	FL/FR
ELITE	125	2012-2013	R
MY	125	2012-2013	R
URBAN	125	2012-2013	R
PULSAR	150	2006	FL/FR
COBRA	220	2006-2011	R
OVERLAND	300	2006-2007	R
COBRA	350	2011-2012	R
URBAN i	350	2012-2013	R
COBRA	400	2010-2013	R
APRILIA			
SX	125	2008-2013	R
TUAREG WIND	600	1988-1990	FL/FR
MOTO 6.5	650	1995-2002	R
BETA			
4.0 MOTARD	350	2003-2005	R
CAGIVA			
CROSS	125	1988	R
N90	125	1990-1992	R
WMX	125	1989-1992	R
WMX	250	1989-1991	R
W12	350	1993	R
W16	600	1995-1997	R
FANTIC M.			
RIDER	50	1986-1987	FL
STRADA	50	1983-1986	FL/FR
HRD			
GS-MC-HK	80	1989-1992	R
GS-MC-HK	80	1989-1992	R
GS-MC-HK	125	1989-1992	R
GS-MC-HK	250	1989-1992	R
GS-HK	255	1991-1992	R
HUSABERG			
FE	350	1993	R
MC	350	1990-1992	R
FC	450	1993	R
FE	501	1993	R
MC	501	1990-1992	R
FC	600	1993	R
HUSQVARNA			
CR	125	1990-1994	R
WR	125	1990-1994	R
CR	250	1990-1994	R

MODELLO MODEL	CC	ANNO YEAR	POSIZIONE POSITION
WR	250	1990-1994	R
WR	260	1990-1994	R
TE	350	1989-1991	R
TE	510	1990-1991	R
TC 610	600	1991	R
TE 610	600	1991	R
WRK	600	1989-1990	R
KAWASAKI			
KH	100	1983-1986	FL
ELIMINATOR	125	1998-1999	R
ELIMINATOR	125	2000-2007	R
KMX	125	1986-2003	R
KX	125	1983-1986	FL
KX	125	1986-1988	R
KDX	200	1986-2006	FL
KMX	200	1988-1989	R
KLE	250	1983-1985	FL
KLR	250	1984-1991	FL
KLR	250	1984-1991	R
KR	250	1985	FL/FR
KSF MOJAVE	250	1987-2003	FL/FR
KX	250	1984-1986	FL
KX	250	1987-1988	R
KX F	250	1987-1988	FL
KXT	250	1987-1988	FL/FR
ZZR	250	1990-1992	R
KLF BAJOU	300	1989-2001	FL/FR
KLR	350	1985-1986	FL
FX R	400	1986-1987	FL
ZR	400	1983-1984	FL
ZX	400	1984-1985	FL
EX R NINJA	500	1994-2008	R
GPZ S	500	1989-1992	FL/FR
GPZ S	500	1993-2006	R
KLE	500	1991-2007	R
KX	500	1983-1986	FL
KX	500	1986-1988	R
KZR	500	1983-1985	FL
KZ F	550	1983-1984	FL
ZR	550	1983-1985	FL/FR
KLR	600	1985-1992	FL
KLR	650	1987-2007	R
Z 1000	1000	1981-1983	FL/FR
Z 1000	1000	1981-1983	R
KRAMIT			
ER- MC	125	1989-1993	R
ER- MC	250	1990-1992	R

MODELLO MODEL	CC	ANNO YEAR	POSIZIONE POSITION
KTM			
GS	125	1993	R
MX	125	1989-1991	FL
MX	125	1989-1992	R
SX	125	1993	R
GS	250	1990-1993	R
MX	250	1989-1991	FL
MX	250	1989-1992	R
SX	250	1993	R
GS	300	1991-1994	R
MX	300	1991-1992	R
MX	300	1991	FL
SX	300	1993	R
GS	350	1993	R
MX	500	1989-1991	FL
MX	500	1989-1992	R
SX	500	1993-1994	R
GS	600	1993	R
LC4 ENDURO	600	1991-1992	R
MX	600	1990-1991	FL
MX	600	1990-1992	R
KYMCO			
VISA R	50	2011	FL
VISA R	110	2011	FL
AGILITY R16	125	2008-2014	R
AGILITY R16 PLUS	125	2014	R
LIKE LX	125	2012	R
POLARIS			
PHOENIX	200	2005	R

MODELLO MODEL	CC	ANNO YEAR	POSIZIONE POSITION
SACHS			
X-ROAD	125	2005	R
XTC- N	125	1999	R
ZZ	125	1999	R
MAD ASS	500	2005	R
ROADSTER V1.6	650	2001	R
ROADSTER V2	800	2000	R
SUZUKI			
GSX R	50	1987	FL
RG GAG	50	1987	FL
ZR	50	1981-1988	FL
GT	80	1981-1989	FL
RM X	80	1993	FL
RM X	80	1993	R
RM X	80	1993	R
X3E	80	1987	FL
LT E QUADRUNNER	230	1987-1993	FL/FR
LT S QUADSPORT	230	1985-1988	FL/FR
LT R QUADRACER	250	1985-1992	FL/FR
LT S QUADSPORT	250	1989-1990	FL/FR
GS S	450	1986-1989	FL/FR
LT	500	1987-1995	FL/FR
LT R QUADRACER	500	1987-1990	FL/FR
TM			
GS- MC	80	1990-1992	R
GS- MC	125	1990-1992	R
YAMAHA			
DT SM	50	2003-2004	R
DT	125	1984	FL
TDR (Italian model)	125	1989-1999	R

671

SM1
- Semimetallica polivalente
- Semi-metallic pad

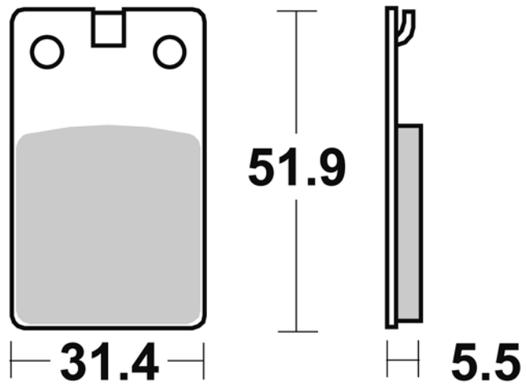

MODELLO MODEL	CC	ANNO YEAR	POSIZIONE POSITION
AGRATI G.			
CICLONE LC SM	50	1986-1988	FL
FORMUNO RAID	50	1989-1994	FL
SAHEL	50	1988-1991	R
SUPER CICLONE AC	50	1991-1994	FL
URKA AC-LC	50	1989-1994	FL
APRILIA			
AF1	50	1986-1989	FL
RED ROSE	50	1988-1989	FL
BETA			
ALP LONG RANGE	50	1991-1998	FL
FOUR AE-S	50	1987-1992	FL
FOUR TWIN	50	1988-1992	FL
TR 32	125	1986-1987	FL
TR 33	125	1987	FL
TR 34	125	1987-1989	FL
TR 33	240	1986-1987	FL
TR 34-REPLICA	240	1987-1988	FL
FANTIC M.			
50-5	50	1989-1991	R
TRIAL	50	1987-1988	FL
TRIAL	50	1989-1995	R
TRIAL	125	1986-1987	FL
TRIAL 201	200	1985-1986	FL
TRIAL 243	240	1987-1989	FL

MODELLO MODEL	CC	ANNO YEAR	POSIZIONE POSITION
TRIAL 243	240	1987-1989	R
TRIAL 301	250	1985-1986	FL
TRIAL 303	250	1987-1988	FL
TRIAL 303	250	1987-1988	R
GILERA			
BULLIT	50	1990-1996	FL
MALAGUTI			
CROSSER CR1 (Rear Drum Model)	50	1995-1998	FL
F12 PHANTOM	50	1994-1998	FL
F15 FIREFOX (Rear Drum Model)	50	1996-1998	FL
FIFTY BSF-BLACK SPECIAL	50	1986-1988	FL
FIFTY EVOLUTION	50	1991-1998	FL
FIFTY FULL CX	50	1986-1998	FL
FIFTY RAID	50	1991-1998	FL
FIFTY TOP	50	1989-1998	FL
RST	50	1989-1998	FL
RST	50	1989-1998	R
MOTRON			
COMPACT RACING ES	50	1989-1992	FL
COMPACT WF	50	1988-1992	FL
GL4 FLASH ID	50	1989-1993	FL
RZ1 ES	50	1989-1994	FL
STING	50	1995	FL
THUNDER	50	1995	FL
XLE	50	1988-1993	FL

Le immagini hanno il solo scopo di presentare i prodotti.
The images used are aimed at presenting the products only.

FL > pastiglia anteriore sinistra / front left pad
FR > pastiglia anteriore destra / front right pad
R > pastiglia posteriore / rear pad

673

SM1
- Semimetallica polivalente
- Semi-metallic pad

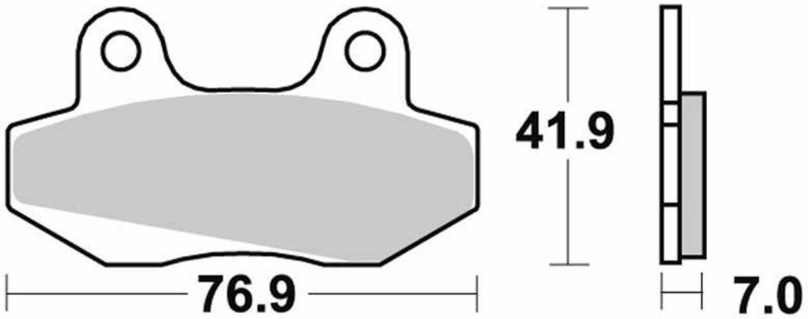

MODELLO MODEL	CC	ANNO YEAR	POSIZIONE POSITION
HONDA			
MBX	50	1983-1985	**FL**
NS F- AERO	50	1988	**FL**
NSR	50	1987-1992	**FR**
MBX DX	80	1982-1983	**FL**
MBX SW SWD	80	1983-1985	**FL**
MCX	80	1982	**FL**
NSR	100	1987-1992	**FR**
CH SPACY	125	1998	**FL**
MBX RWB	125	1984-1986	**FL**
CB REBEL	250	1986-1988	**FR**
CBX (Rear Drum Model)	250	1984-1998	**FR**
HYOSUNG			
COMET GT	125	2004	**FL**
COMET GT	125	2004	**R**
KARION RT	125	2002	**FL**
COMET GT	250	2003-2004	**FL**

MODELLO MODEL	CC	ANNO YEAR	POSIZIONE POSITION
COMET GT	250	2003-2004	**R**
COMET GT	650	2004	**FL/FR**
COMET GT	650	2004	**R**
KYMCO			
JETIX	50	2010	**FL**
NEXXON	50	2008-2009	**FL**
NEXXON	50	2008-2009	**R**
SPIKE	100	2000-2006	**FL**
JETIX	125	2010	**FL**
NEXXON	125	2007-2008	**FL**
NEXXON	125	2007-2008	**R**
JETIX	150	2010	**FL**
SACHS			
MAD ASS	50	2004	**FL**
SYM			
WOLF LEGEND	125	2004-2005	**FL**

679

SM1
- Semimetallica polivalente
- Semi-metallic pad

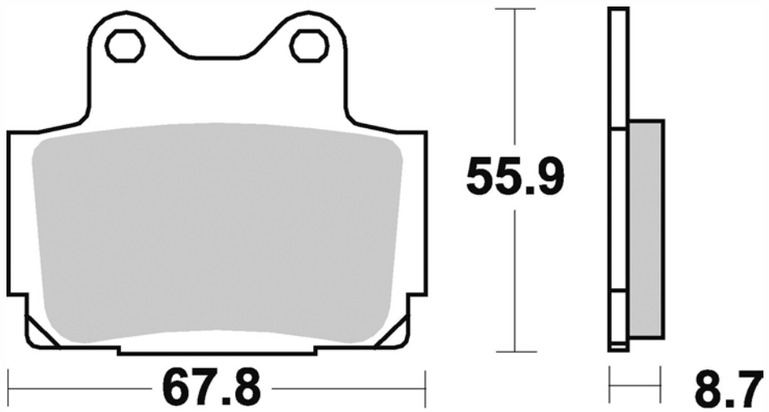

MODELLO MODEL	CC	ANNO YEAR	POSIZIONE POSITION
YAMAHA			
TZR	80	1987	**FL**
RD LC	125	1985-1987	**FL**
TZR	125	1987-1988	**FR**
TZR	125	1989-1992	**R**
SDR	200	1987-1990	**FL**
SDR	200	1987-1990	**R**
FZR	250	1987-1988	**R**
FZR R	250	1989	**R**
FZX ZEAL	250	1991	**R**
R1-Z	250	1997	**R**
TDR	250	1988-1992	**R**
TZ	250	1985-1987	**R**
TZ COMPETITION	250	1988	**FL/FR**

MODELLO MODEL	CC	ANNO YEAR	POSIZIONE POSITION
TZR	250	1985-1987	**R**
TZR	250	1989-1992	**FL/FR**
RD F	350	1985	**FL/FR**
RD F	350	1985	**R**
RD LC	350	1985-1993	**R**
RD LC	350	1986-1993	**FL/FR**
FZ R	400	1985-1987	**R**
FZR R	400	1988-1990	**R**
RD LC	500	1984-1988	**R**
FZ	600	1987-1988	**R**
FZS FAZER	600	1998-2003	**R**
SRX	600	1986-1987	**FL/FR**
SRX	600	1986-1990	**R**
XJ N	600	1991-2003	**R**
XJ S DIVERSION	600	1991-2003	**R**

680

SM1
- Semimetallica polivalente
- Semi-metallic pad

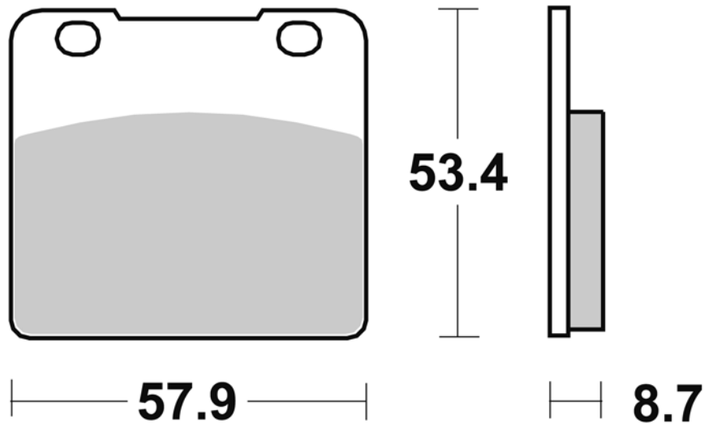

MODELLO MODEL	CC	ANNO YEAR	POSIZIONE POSITION
KAWASAKI			
VN	750	1989-1990	**R**
SUZUKI			
GSX R	250	1988	**FL/FR**
GSX R	400	1987	**FL/FR**
RG GAMMA	500	1985-1989	**FL/FR**
VS GL INTRUDER	600	1997-2005	**FR**
GSX	650	1986	**FL/FR**
GSX	650	1986	**R**
GSX	750	1987-1988	**FL/FR**
GSX R	750	1985-1988	**FL/FR**
VS GL INTRUDER	750	1985-1991	**FR**
VS GLP INTRUDER	750	1986-1991	**FR**

MODELLO MODEL	CC	ANNO YEAR	POSIZIONE POSITION
VS GL INTRUDER	800	1991-1999	**FR**
GSX	1100	1984-1988	**FL/FR**
GSX	1100	1984-1988	**R**
GSX F	1100	1988-1993	**R**
GSX R	1100	1987-1988	**FL/FR**
CAVALCADE	1400	1987-1988	**FR**
CAVALCADE	1400	1987-1988	**R**
VS GL INTRUDER	1400	1987-2004	**FR**
VS GL INTRUDER	1400	1987-2004	**R**
VS GLP INTRUDER	1400	1987-2004	**FR**
VS GLP INTRUDER	1400	1987-2004	**R**
VL INTRUDER LC	1500	1998-2001	**FR**
VL INTRUDER LC	1500	1998-2001	**R**

681

SM1
- Semimetallica polivalente
- Semi-metallic pad

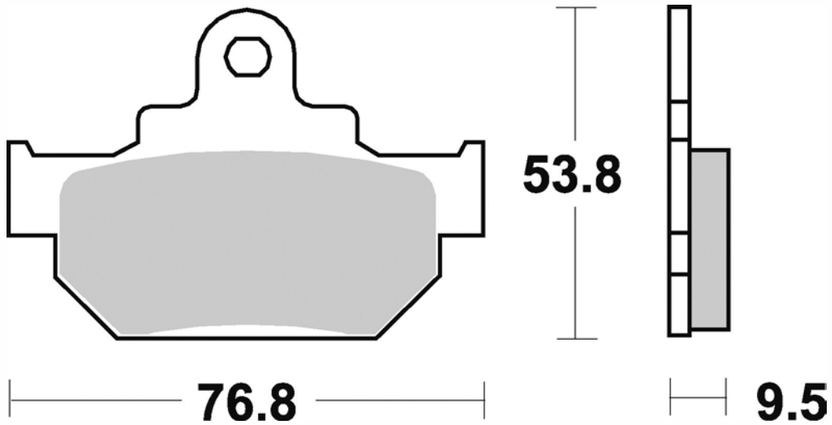

MODELLO MODEL	CC	ANNO YEAR	POSIZIONE POSITION
SUZUKI			
RM	125	1985-1986	**FL**
GS L	450	1988	**FL/FR**
RM	500	1985-1986	**FL**

MODELLO MODEL	CC	ANNO YEAR	POSIZIONE POSITION
DR S	600	1985-1986	**FL**
DR S DAKAR	600	1985-1989	**FL**
SP F	600	1985-1987	**FL**
LS SAVAGE	650	1988-1994	**FL**

Le immagini hanno il solo scopo di presentare i prodotti.
The images used are aimed at presenting the products only.

FL > pastiglia anteriore sinistra / front left pad
FR > pastiglia anteriore destra / front right pad
R > pastiglia posteriore / rear pad

683

SM1
- Semimetallica polivalente
- Semi-metallic pad

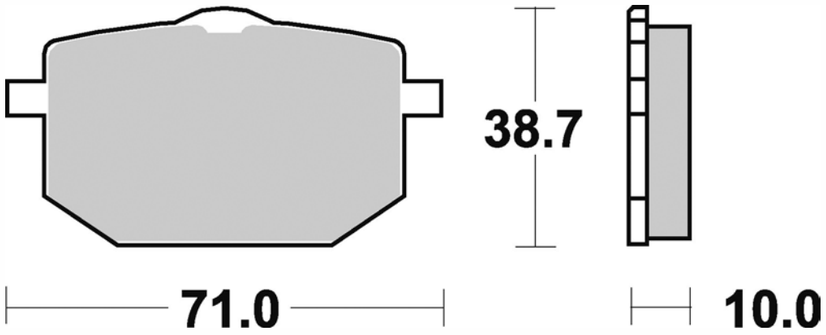

MODELLO MODEL	CC	ANNO YEAR	POSIZIONE POSITION
YAMAHA			
TT	600	1989	FL
XT	600	1987-1990	FL
XT 4 VALVES	600	1986-1989	FL
XT Z TENERE	600	1986-1991	FL

MODELLO MODEL	CC	ANNO YEAR	POSIZIONE POSITION
XR2	125	1988-1989	FL
ARIZONA HAWK	200	1986-1987	FL
RV ES	200	1985-1988	FL
RALLY	250	1987-1989	FL
DAKOTA	350	1986-1989	FL
DAKOTA	500	1987-1989	FL
XRT	600	1988-1989	FL
HONDA			
CRM (Italia)	125	1990	FL
MTX	125	1985-1989	FL
NS F	125	1985-1987	FL
NS ROTHMANS	125	1986-1987	FL
NSR	125	1987-1989	FL
NSR F	125	1990-1992	FL
NSR F RAIDEN	125	1993-2003	FL
NSR R	125	1990-2003	FL
NX TRANSCITY	125	1990-1998	FL

MODELLO MODEL	CC	ANNO YEAR	POSIZIONE POSITION
XL	125	1985-1988	FL
XL	200	1985-1987	FL
XL Paris-Dakar	200	1987-1991	FL
MALAGUTI			
RUNNER	125	1987-1988	FL
SPIDER MAX GT	500	2005-2006	FL/FR
MORINI			
CAMEL 501	500	1987-1989	FL
EXCALIBUR 501	500	1987	FL
SACHS			
ROADSTER V2	125	2001	FL
ZX	125	1999	FL
ZZ	125	1999	FL
YAMAHA			
DT LC BELGARDA	125	1986-1990	FL
DT TENERE BELGARDA	125	1987	FL

684

SM1
- Semimetallica polivalente
- Semi-metallic pad

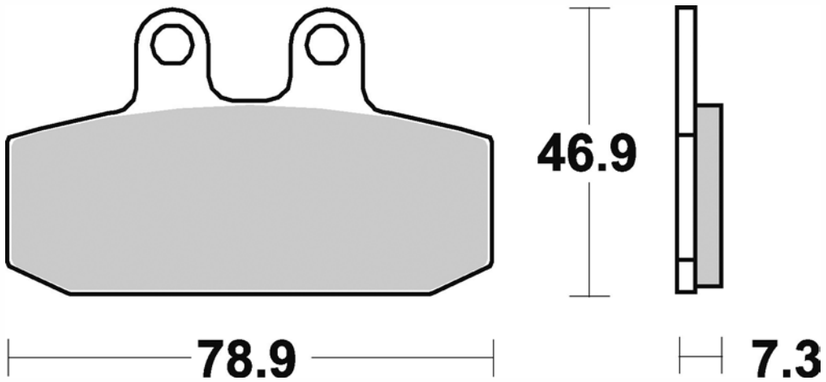

MODELLO MODEL	CC	ANNO YEAR	POSIZIONE POSITION
AGRATI G.			
TIGER XLE	125	1986-1988	FL
APRILIA			
CLASSIC	125	1996	FR
LEONARDO (Grimeca cal.)	125	1999-2004	FL
RED ROSE	125	1990-2002	FR
RX	125	1986-1989	FL
SCARABEO	125	1999-2003	FL
SCARABEO GT	125	1999-2003	FL
SPORT CITY CUBE	125	2008-2010	FL
SPORTCITY	125	2004-2007	FL
TUAREG RALLY	125	1986-1988	FR
LEONARDO (Grimeca cal.)	150	1999	FL
SCARABEO	150	1999-2002	FL
SCARABEO GT	200	2001-2004	FL
SPORTCITY	200	2005-2007	FL
LEONARDO	250	1999-2004	FL
LEONARDO (Grimeca cal.)	250	1999-2004	FL
SPORT CITY CUBE	250	2008-2010	FL
SPORTCITY	250	2006-2007	FL/FR
TUAREG RALLY	250	1986-1987	FL
LEONARDO (Grimeca cal.)	300	2005-2006	FL
ETX	350	1986-1989	FL
TUAREG WIND	350	1987-1989	FL
ATLANTIC	500	2002-2005	FL/FR
SCARABEO	500	2003-2005	FL/FR

MODELLO MODEL	CC	ANNO YEAR	POSIZIONE POSITION
ETX	600	1986-1987	FL
PEGASO	600	1989-1990	FL
MANA	850	2007-2011	R
MANA GT	850	2009-2013	R
CAGIVA			
BLUES	125	1989-1992	FL
ROADSTER	125	1994	FL
ROADSTER	200	1994	FL
DERBI			
BOULEVARD S	125	2007	FL
RAMBLA	125	2008-2012	FL
RAMBLA	250	2008-2009	FL
RAMBLA	300	2010-2012	FL
FANTIC M.			
RAIDER LC	250	1984-1986	FL
GILERA			
ARIZONA HAWK	125	1985-1988	FL
COUGAR	125	1999	FL
FAST BIKE	125	1987-1989	FL
KK	125	1985-1989	FL
KZ	125	1985-1989	FL
R1	125	1988-1989	FL
RRT NEBRASCA	125	1986-1988	FL
RTX	125	1986-1988	FL
RV	125	1984-1988	FL
XR1	125	1988-1989	FL

685

SM1
- Semimetallica polivalente
- Semi-metallic pad

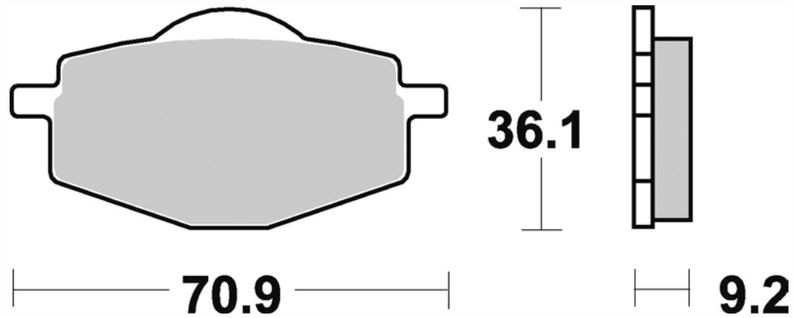

MODELLO MODEL	CC	ANNO YEAR	POSIZIONE POSITION
GILERA			
APACHE	125	1991-1993	R
RC FOUR VALVE	600	1988-1993	R
RC R	600	1991-1994	R
MALAGUTI			
BLOG	125	2009-2011	R
CENTRO	125	2007-2011	R
BLOG	160	2009-2011	R
CENTRO	160	2007-2011	R
MBK			
FLAME R/F	125	1995-2003	FR
VERTEX	150	1997	FR
YAMAHA			
DT R	50	1994-1995	FL
DTR MX	50	1989	FL
TDR	50	1990	FL
TDR	50	1990	R
TZM R	50	1994	R
TZR R	50	1993-2002	R
YSR	50	1986-1989	FL
YZR	50	1987-1990	FL
YSR	60	1986-1988	FL
DT LC-2 (53V/D482)	80	1985-1993	FL
RD	80	1987-1990	FL
TDR	80	1989	FL
TDR	80	1989	R
DT LC	125	1985-1988	FL

MODELLO MODEL	CC	ANNO YEAR	POSIZIONE POSITION
DT R	125	1988-2003	FL
DT R	125	1988-2003	R
XC CYGNUS F	125	2000	FR
XC CYGNUS R/SV	125	1996-2002	FR
YBR	125	2005-2006	FR
YZ	125	1988	R
XC FLY ONE	150	1994	FR
RT	180	1990-1997	FL
DT	200	1984-1988	FL
DT R	200	1989-1991	FL
DT R	200	1989-1991	R
TT	225	1986-1987	FL
TT R	225	1999-2004	FL
XT SEROW	225	1992-2000	FL
YTZ	250	1985-1986	FL/FR
YTZ	250	1985-1986	R
YZ	250	1988	R
XT	350	1985-1996	FL
YFM X WARRIOR	350	1987-1988	FL/FR
YFZ BANSHEE	350	1987-1989	FL/FR
YZ	490	1988-1990	R
TT	600	1985-1986	FL
XT	600	1987-1990	R
XT 4 VALVES	600	1988-1989	R
XT E	600	1990-2003	R
XT Z TENERE	600	1987-1991	R
XTZ TENERE	660	1991-1998	R

Le immagini hanno il solo scopo di presentare i prodotti.
The images used are aimed at presenting the products only.

FL > pastiglia anteriore sinistra / front left pad
FR > pastiglia anteriore destra / front right pad
R > pastiglia posteriore / rear pad

686

CM46
- Sinterizzata off-road uso racing
- Offroad sintered pad racing use

CM44
- Sinterizzata off-road
- Offroad sintered pad

SM1
- Semimetallica polivalente
- Semi-metallic pad

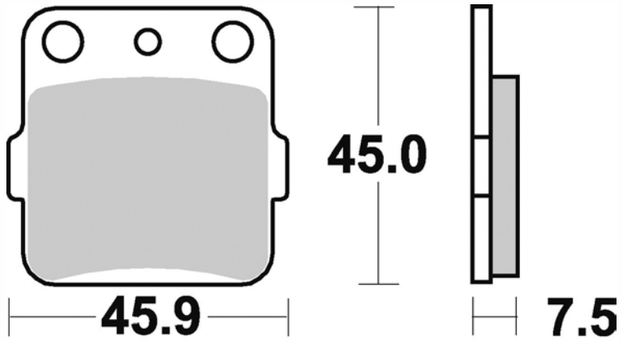

MODELLO MODEL	CC	ANNO YEAR	POSIZIONE POSITION
ARCTIC CAT			
DVX	400	2004-2006	R
HONDA			
CR R	80	1990-2002	FL
CR R	85	2003-2007	FL
CRF R	150	2007-2013	FL
CRF RB	150	2007-2013	FL
ATC X	200	1983-1987	FL/FR
ATC X	200	1983-1987	R
ATC R	250	1983-1984	FL/FR
ATC R	250	1983-1984	R
ATC X	250	1986	R
TRX EX SPORTRAX	250	2001-2007	FL/FR
TRX X	250	1987-1992	FL/FR
TRX X	250	1987-1992	R
TRX EX	300	1993-2008	FL/FR
TRX EX	300	1993-2008	R
TRX EX SPORTRAX	300	2001	FL/FR
TRX EX SPORTRAX	300	2001	R
ATC	350	1985	R
ATC X	350	1985-1986	R
ATC X	350	1986	R
TRX EX	400	1999-2008	R
TRX EX FOURTRAX	400	1999-2007	FL/FR
TRX EX FOURTRAX	400	1999-2007	R
TRX EX SPORTRAX	400	2001	FL/FR
TRX EX SPORTRAX	400	2001	R
HONDA-HM			
CRE	80	1998-2002	FL
CR	85	2003-2007	FL
CRF R	150	2007-2009	FL
HUSQVARNA			
TE	350	1992-1994	R
CR	360	1992-1994	R
WR	360	1992-1994	R
TC 610	600	1992-1994	R
TE 610	600	1992-1994	R

MODELLO MODEL	CC	ANNO YEAR	POSIZIONE POSITION
HYOSUNG			
TE	400	2005	FL/FR
KAWASAKI			
KX	65	2000-2015	R
KX	80	1988-1999	R
KX	85	2000-2015	R
KX	100	1988-2015	R
KSF MOJAVE	250	1987-2003	R
KX F	250	1987-1988	R
KXT	250	1987-1988	R
KEF LAKOTA	300	1995-1996	R
KFX	400	2002-2006	R
KFX R	450	2008-2014	R
SUZUKI			
RM	65	2003-2005	R
RM	100	2003-2004	R
RM	125	1988	R
RM	250	1987-1988	R
RM	500	1987-1989	R
YAMAHA			
YZ	80	1993-2001	R
YZ	85	2002-2015	R
YZ	125	1989	R
YFS R BLASTER	200	2003-2006	R
YFM RAPTOR	250	2008-2009	R
YZ	250	1989	R
YFM WARRIOR	300	1989	R
YFM FX WOLVERINE	350	1995	R
YFM R RAPTOR	350	2004-2008	FL/FR
YFM R RAPTOR	350	2004-2008	R
YFM X WARRIOR	350	1987-1988	R
YFZ BANSHEE	350	1987-2009	R
YZ	360	1989	R
YFM KODIAK 4x4 auto	450	2005-2006	FL/FR
YFZ S	450	2004-2005	R
YFM GRIZZLY 4x4	600	1998-2001	FL/FR
YFM FWAP GRIZZLY 4x4	660	2002-2008	FL/FR
YFM RN RAPTOR	660	2001-2005	FL/FR
YFM RN RAPTOR	660	2001-2005	R

687

SM1
- Semimetallica polivalente
- Semi-metallic pad

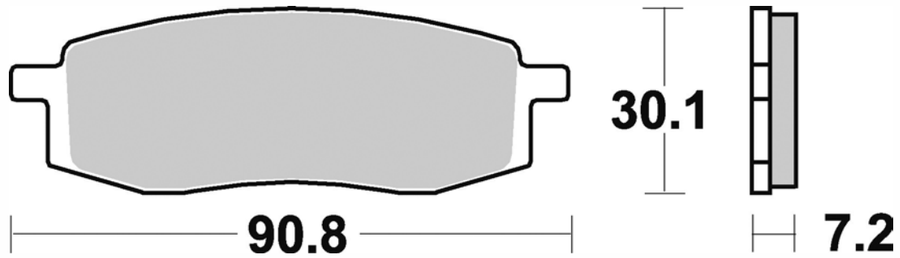

MODELLO MODEL	CC	ANNO YEAR	POSIZIONE POSITION
YAMAHA			
YZ	125	1985-1988	FL
TT S	250	1987-1989	FL
YZ	250	1985-1988	FL

MODELLO MODEL	CC	ANNO YEAR	POSIZIONE POSITION
TT (Rear Drum Model)	350	1986-1995	FL
YZ	490	1985-1990	FL
TT	600	1990-1992	FL

688

CM66
- Semimetallica uso racing
- Semi-metallic pad racing use only

CM55
- Sinterizzata stradale ant. uso sportivo
- Front sintered pad

SM1
- Semimetallica polivalente
- Semi-metallic pad

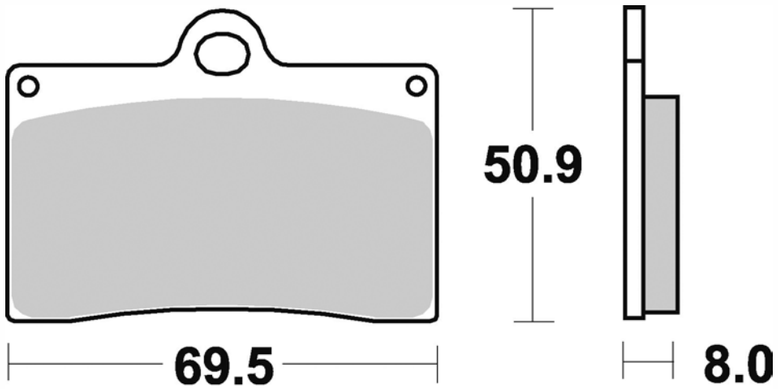

MODELLO MODEL	CC	ANNO YEAR	POSIZIONE POSITION
APRILIA			
GP REPLICA	125	1993	FL
GP REPLICA	250	1991-1994	FR
RS REPLICA	250	1995-1997	FR
RSV - GP	250	1995-1996	FL/FR
BETA			
JONATHAN	125	1999	FR
EURO	350	1999-2006	FR
JONATHAN	350	2002-2006	FR
M4	350	2006	FL
BIMOTA			
YB7	400	1989	FL/FR
V-DUE	500	1997-2000	FL/FR
BELLARIA	600	1991-1993	FL/FR
YB9	600	1997-2000	FL/FR
BB1 SUPERMONO	650	1996-2000	FR
DB1 RS	750	1987-1989	FL/FR
SB7	750	1995-2000	FL/FR
YB4 EI	750	1987-1991	FL/FR
YB6	750	1987-1990	FL/FR
TESI 1D 851	851	1990-1991	FL/FR
DB2 SR	904	1993-2000	FL/FR
DB3 MANTRA	904	1995-2000	FL/FR
DB4	904	1998-1999	FL/FR
TESI 1D 906	904	1993-2000	FL/FR
DIECI	1000	1991-1995	FL/FR
DIECI BIPOSTO	1000	1992-1995	FL/FR
TESI 2D	1000	2005-2006	FL/FR

MODELLO MODEL	CC	ANNO YEAR	POSIZIONE POSITION
YB11	1000	1996-2000	FL/FR
YB6	1000	1988-1989	FL/FR
YB8 FURANO	1000	1992-2000	FL/FR
SB6	1100	1996-2000	FL/FR
SB6R	1100	1998-2000	FL/FR
TUATARA	1100	1990	FL/FR
CAGIVA			
MITO	125	1993-1994	FR
MITO EV	125	1995-2007	FR
MITO SP525	125	2006-2010	FR
PLANET	125	1997-2007	FR
RAPTOR	125	2003-2010	FR
RIVER	600	1995-1999	FR
DUCATI			
JUNIOR SS	350	1991-1993	FL
MONSTER	400	1994-1999	FL
SS SUPERSPORT	400	1992-1997	FL
SS SUPERSPORT JUNIOR	400	1992-1997	FL/FR
SUPERMONO DESMOQUATTRO	530	1993	FL/FR
MONSTER	600	1994-1999	FL
SS SUPERSPORT	600	1994-2000	FL/FR
748 BIPOSTO	748	1995-1997	FL/FR
748 SP	748	1995-1997	FL/FR
F1	750	1985-1987	FL/FR
LAGUNA SECA	750	1987-1989	FL/FR
MONSTER	750	1994-1999	FL/FR
SS SUPERSPORT	750	1991-1999	FL/FR
851 STRADA - SP	851	1988-1991	FL/FR

Le immagini hanno il solo scopo di presentare i prodotti.
The images used are aimed at presenting the products only.

FL > pastiglia anteriore sinistra / front left pad
FR > pastiglia anteriore destra / front right pad
R > pastiglia posteriore / rear pad

MODELLO MODEL	CC	ANNO YEAR	POSIZIONE POSITION
888 CORSA	888	1990-1991	FL/FR
888 CORSA	888	1992-1994	FL
888 CORSA	888	1990-1994	FL/FR
888 DESMOQUATTRO	888	1993-1994	FL/FR
888 SP	888	1990-1991	FL/FR
888 SP	888	1992-1993	FL
888 SP	888	1990-1993	FL/FR
MONSTER	900	1993-1999	FL/FR
SL 900 SUPERLIGHT	900	1991-1997	FL/FR
SS SUPERSPORT	900	1991-1997	FL/FR
PASO 907 I.E.	904	1990-1991	FL/FR
916 BIPOSTO	916	1994-1998	FL/FR
916 SP	916	1994-1996	FL/FR
GAS GAS			
HALLEY (2t)	125	2009	FL
FSR	450	2007	FL
GILERA			
PIUMA	500	1990-1991	FL
SATURNO	500	1988-1989	FL
HONDA			
RS GP	125	1997-2005	FR
RS R	125	1997-2005	FR
RS GP	250	1993-1997	FL/FR
RS R	250	1993-1997	FL/FR
TSR	250	1999	FL/FR
HUSABERG			
FE S	600	1999-2003	FL
HUSQVARNA			
SMR	450	2003-2004	FL
SMR	570	2000-2004	FL
KTM			
STING	125	1998	FL
SMR	450	2004	FL
SMR	525	2004	FL
DUKE	620	1995-1998	FL
DUKE-E	640	1998	FL
LC4 SUPERMOTO	640	2003	FL
SMC	660	2003	FL

MODELLO MODEL	CC	ANNO YEAR	POSIZIONE POSITION
LAVERDA			
GHOST	650	1996-1999	FL/FR
SPORT	650	1995-2001	FL/FR
S FORMULA	750	1998-2001	FL/FR
STRIKE	750	1998-2001	FL/FR
MOTO GUZZI			
DAYTONA IE	1000	1991-2000	FL/FR
V10 CENTAURO	1000	1996-2001	FL/FR
V10 CENTAURO SPORT	1000	1998-2000	FL/FR
CALIFORNIA EV	1100	1996-2000	FL/FR
SPORT	1100	1996	FL/FR
MZ			
SKORPION	660	1994	FL
SACHS			
X-ROAD	125	2005	FL
XTC- N	125	1999	FL
MAD ASS	500	2005	FL
ROADSTER V1.6	650	2001	FL
B-805	800	2002	FL/FR
ROADSTER V2	800	2000	FL/FR
S-805	800	2003	FL/FR
TM			
SMR	125	2005-2011	FL
SMR	250	2005-2011	FL
SMR	300	2005-2011	FL
SMF F	400	2002	FL
SMR F	400	2003	FL
SMR F	450	2004-2009	FL
SMX F	450	2003	FL
SMR F	530	2003-2009	FL
SMX F	600	2003	FL
VOR			
SM	400	2000-2002	FL
SM RC	450	2002	FL
495 SM	495	1999	FL
YAMAHA			
SZR	660	1995-2001	FR

690

SM1
- Semimetallica polivalente
- Semi-metallic pad

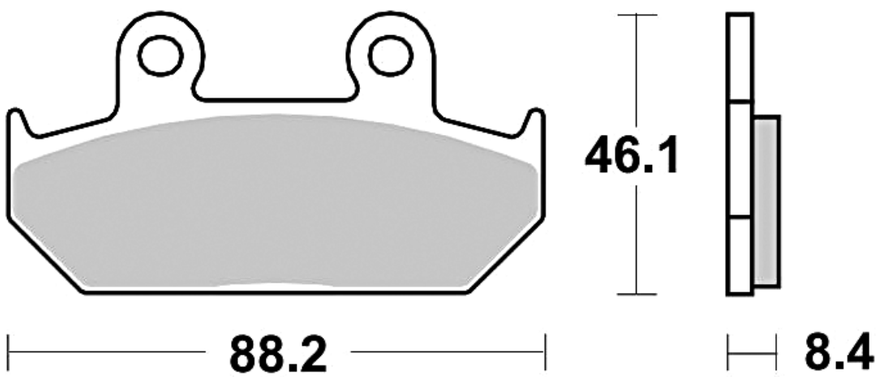

MODELLO MODEL	CC	ANNO YEAR	POSIZIONE POSITION
CAGIVA			
ELEFANT	900	1990-1992	FL
HONDA			
RS	125	1988-1989	FR
STEED	600	1988-1990	FR
VT C SHADOW	600	1988-1993	FL
XL V TRANSALP	600	1991-1993	FL

MODELLO MODEL	CC	ANNO YEAR	POSIZIONE POSITION
NX DOMINATOR	650	1988-1996	FL
XRV AFRICA TWIN	650	1988-1989	FL
CBR HURRICANE	750	1987-1989	FL/FR
VFR F	750	1986-1987	FL/FR
CBR F	1000	1987-1988	FL/FR
GL GOLD WING	1500	1988-2000	FL/FR
GLX SE	1500	1990-2000	FL/FR

692

SM1
- Semimetallica polivalente
- Semi-metallic pad

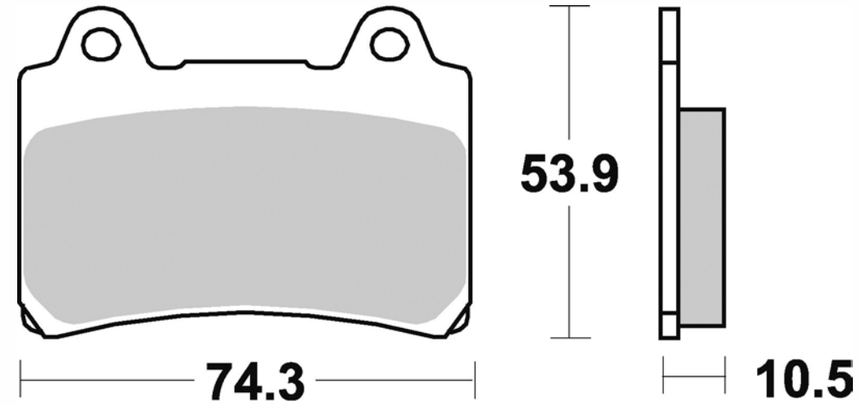

MODELLO MODEL	CC	ANNO YEAR	POSIZIONE POSITION
YAMAHA			
FZR	250	1987-1988	FL/FR
R1-Z	250	1997	FL/FR
TDR	250	1988-1992	FR
TZ	250	1985-1987	FL
TZR	250	1985-1987	FL
FZR R	400	1988-1990	FL/FR
SRX	400	1991	FL
SRX	600	1988-1989	FL/FR
FZ GENESIS	750	1989-1992	FL/FR
FZR R GENESIS	750	1987-1988	FL/FR

MODELLO MODEL	CC	ANNO YEAR	POSIZIONE POSITION
TDM	850	1991-1995	FL/FR
FZR GENESIS	1000	1987-1989	FL/FR
FJ	1200	1988-1995	FL/FR
FJ ABS	1200	1991-1993	FL/FR
XJR	1200	1995-1996	FL/FR
XVZ ROYAL STAR	1300	1996-2007	FL/FR
XVZ ROYAL STAR	1300	1996-2007	R
XVZ TF ROYAL STAR VENTURE	1300	1999-2007	R
XVZ VENTURE ROYALE	1300	1988-1995	FL/FR
XVZ VENTURE ROYALE	1300	1988-1995	R
ROAD STAR	1600	1999-2007	R
WILD STAR	1600	1999-2007	R

694

SM1
- Semimetallica polivalente
- Semi-metallic pad

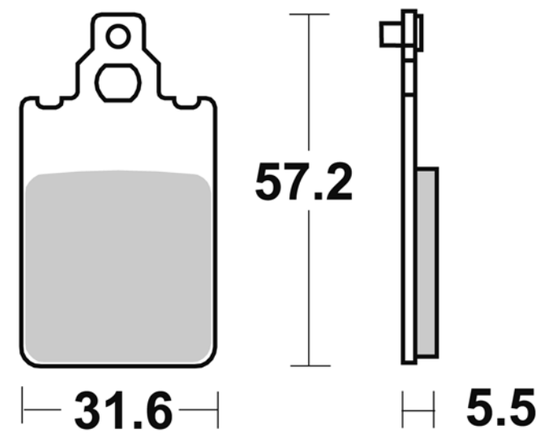

MODELLO MODEL	CC	ANNO YEAR	POSIZIONE POSITION
AGRATI G.			
SAHEL	50	1988-1991	FL
APRILIA			
AF1 FUTURA - AE	50	1990	FL
AF1 REPLICA	50	1989-1990	FL
EUROPA	50	1990-1995	FL
RED ROSE	50	1990-1991	FL
RED ROSE CLASSIC	50	1992-2002	FL
RX	50	1989	FL
TUAREG RALLY	50	1991-1994	FL
ATK			
604 QUADRACER	604	1990	R
BETA			
TEMPO 13	50	1995-1996	FL
TEMPO 16	50	1994-1996	FL

MODELLO MODEL	CC	ANNO YEAR	POSIZIONE POSITION
TR 34	125	1987-1989	R
TR 34-REPLICA	240	1987-1988	R
KTM			
EXC	50	1995-1998	FL
MALAGUTI			
CENTRO BASE	50	1993-1994	FR
CENTRO SL	50	1994-2000	FR
CENTRO SL CAT	50	1994-2000	FR
F12 PHANTOM L.C.	50	1994-1998	FL
F15 FIREFOX twin disk	50	1996-1998	FL
PIAGGIO			
FREE	50	1995-2000	FL
FREE DELIVERY	50	2000-2001	FL
YAMAHA			
DT SM	50	2003-2004	FL

Le immagini hanno il solo scopo di presentare i prodotti.
The images used are aimed at presenting the products only.

FL > pastiglia anteriore sinistra / front left pad
FR > pastiglia anteriore destra / front right pad
R > pastiglia posteriore / rear pad

696

CM44
- Sinterizzata off-road
- Offroad sintered pad

CM56
- Sinterizzata stradale post. uso sportivo
- Rear sintered pad

P30
- Sinterizzata scooter
- Scooter sintered pad

SM1
- Semimetallica polivalente
- Semi-metallic pad

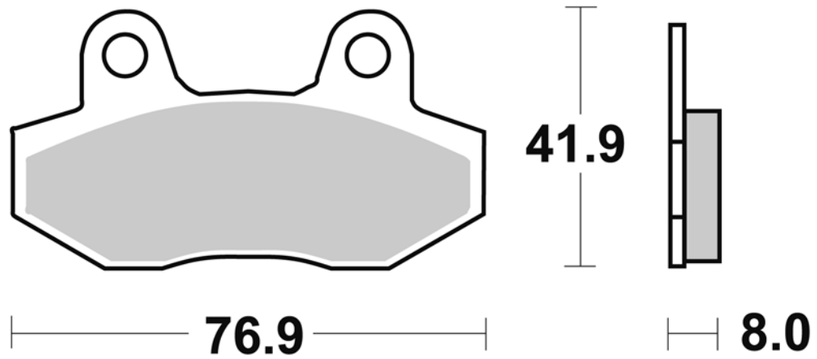

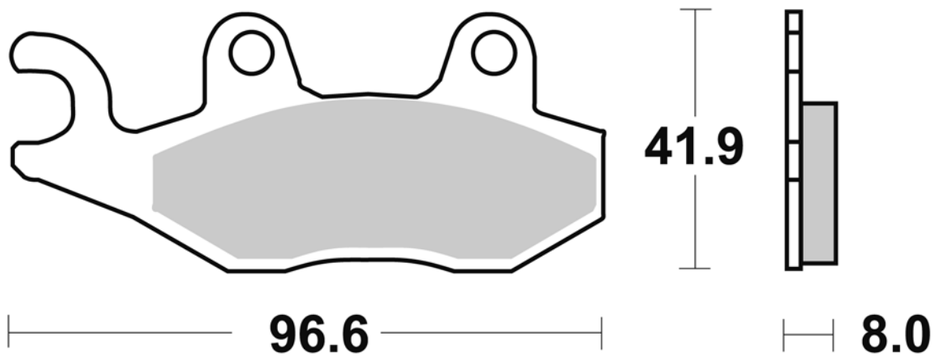

MODELLO MODEL	CC	ANNO YEAR	POSIZIONE POSITION
AEON			
ELITE i	350	2012-2013	R
CROSSLAND 2x4	400	2012-2013	R
CROSSLAND 4x4	400	2012-2013	R
CAGIVA			
CANYON	600	1995-1999	FL
HONDA			
DREAM	50	1997	FL
NSR	150	2002	R
HUSQVARNA			
TE	350	1992-1994	FL
CR	360	1992-1994	FL
WR	360	1992-1994	FL
TC 610	600	1992-1994	FL
TE 610	600	1992-1994	FL
KAWASAKI			
KLX	125	2010-2014	FL
KLX D-TRACKER	125	2010-2014	FL
KX	125	1989-1993	FL
KDX	250	1991-1997	FL
KLX S	250	2009-2014	FL
KX	250	1989-1993	FL
KLF BAJOU 4X4	300	1989	FL
KLF BAJOU	400	1993-1999	FL
KX	500	1989-1993	FL
KVF 4x4i	750	2005	FL
KYMCO			
PEOPLE S	250	2006-2009	FR
PEOPLE S	300	2008-2010	FR
MZ			
SM	125	2002	FL
SX	125	2002	FL

MODELLO MODEL	CC	ANNO YEAR	POSIZIONE POSITION
SUZUKI			
RM	125	1987-1995	FL
TS R	125	1989	FL
TS R	200	1989	FL
COBRA	250	1989	FL
DR S	250	1990	FL
RM	250	1987-1995	FL
RMX S	250	1992-1998	FL
LT F KING QUAD	300	2002	FL
DR R	350	1994-1999	FL
DR S	350	1989-1993	FL
DR S	350	1996-1999	FL
BURGMAN ABS	400	2011-2013	FL
BURGMAN twin disk	400	2006-2012	FL
LT R QUADRACER	450	2006-2010	FL
LT A QUADMASTER	500	2000-2001	FL
LT F QUADRUNNER	500	1998-2002	FL
RM	500	1987-1989	FL
TRIUMPH			
TRIDENT	750	1991-1996	FL
BONNEVILLE	800	2001-2006	R
SPEEDMASTER	800	2003-2004	R
AMERICA	865	2007-2013	R
BONNEVILLE	865	2007-2013	R
BONNEVILLE SE	865	2009-2011	R
BONNEVILLE- T100	865	2005-2013	R
SCRAMBLER	865	2006-2013	R
SPEEDMASTER	865	2005-2013	R
THRUXTON	865	2004-2014	R
SPEED TRIPLE T509	900	1997-1998	R
TIGER	900	1993-1998	FL
TRIDENT	900	1991-1996	FL

MODELLO MODEL	CC	ANNO YEAR	POSIZIONE POSITION
TROPHY	900	1991-1995	FL
DAYTONA T595	950	1996-1998	R
DAYTONA T595	950	1996-1998	R
DAYTONA T955i	955	1999-2006	R
SPEED TRIPLE T955	955	1999-2004	R
SPRINT ST	955	1998-2004	R
SPEED TRIPLE	1050	2005-2013	R
SPEED TRIPLE	1050	2005-2010	R
SPEED TRIPLE	1050	2011-2013	R
SPEED TRIPLE ABS	1050	2011	R
SPEED TRIPLE R	1050	2012-2014	R
SPEED TRIPLE R ABS	1050	2012-2014	R
SPRINT ST T1050	1050	2005-2011	R
SPRINT ST T1050 ABS	1050	2005-2008	R
TIGER EXPLORER	1200	2012-2014	R
TIGER EXPLORER XC	1200	2013-2014	R
TROPHY	1200	1991-1995	FL
YAMAHA			
WR	125	1989-1997	FL

MODELLO MODEL	CC	ANNO YEAR	POSIZIONE POSITION
YZ	125	1989-1997	FL
WR R	200	1992-1995	FL
TT R	230	2005-2008	FL
TT R	250	1993	FL
WR	250	1990-1997	FL
YZ	250	1989-1997	FL
YZ	360	1989	FL
YZ RALLY	360	1990-1993	FL
YFZ R	450	2011-2014	FR
YFZ S	450	2004-2009	FL
YXR RHINO	450	2006-2008	FL
WR Z	500	1992	FL
WR Z	500	1994	FL
WR Z	500	1992-1993	FL
YXR RHINO	660	2004-2007	FL
YFM RN RAPTOR	700	2006-2009	FL
YXR RHINO	700	2008-2012	FL
XTZ SUPER TENERE	750	1989-2000	FL

698

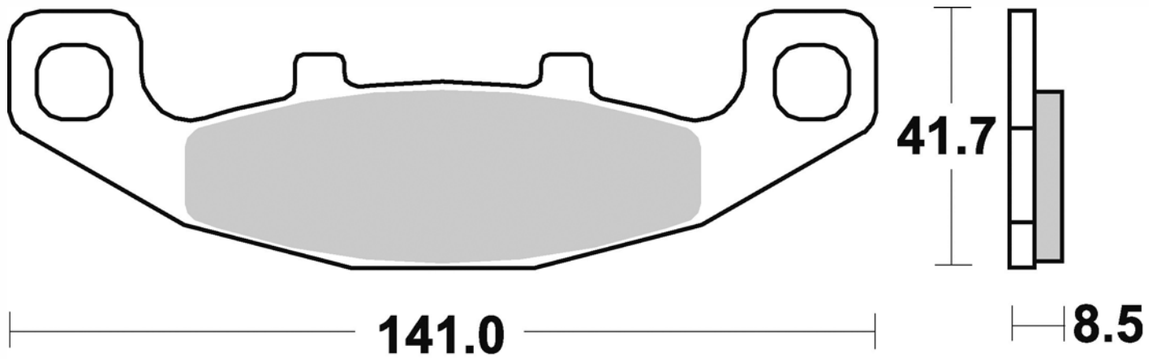

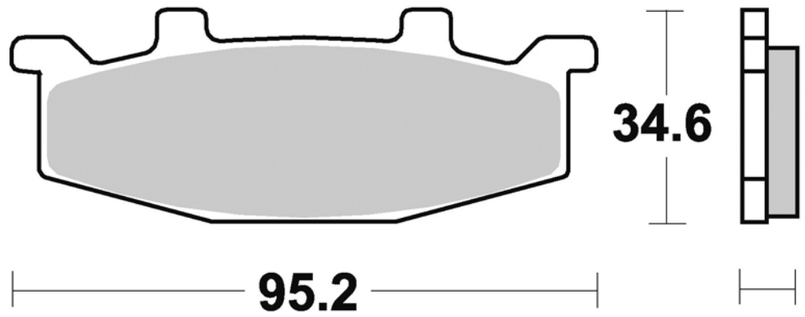

CM56
- Sinterizzata stradale post. uso sportivo
- Rear sintered pad

SM1
- Semimetallica polivalente
- Semi-metallic pad

MODELLO MODEL	CC	ANNO YEAR	POSIZIONE POSITION
HYOSUNG			
COMET GT	250	2002	FL
KAWASAKI			
EX R NINJA	250	1988-2007	FL
ZZR	250	1990-1991	FL/FR
ZZR	250	1992	FR
GPX R	400	1987-1989	R
ZX	400	1988-1989	R
ZZR	400	1990	R
ER5	500	1996-2000	FL

MODELLO MODEL	CC	ANNO YEAR	POSIZIONE POSITION
EX R NINJA	500	1994-2008	FL/FR
GPZ S	500	1987-1988	FR
KLE	500	1991-2007	FL
ZEPHYR	500	1991-1992	FL/FR
ZEPHYR	550	1993-2001	FL/FR
ELIMINATOR	600	1995-1999	FR
GPX R	600	1985-1990	R
GPX R	600	1985-1990	FL/FR
ZX	600	1988-1990	R
ZX	600	1988-1990	FL/FR

Le immagini hanno il solo scopo di presentare i prodotti.
The images used are aimed at presenting the products only.

FL > pastiglia anteriore sinistra / front left pad
FR > pastiglia anteriore destra / front right pad
R > pastiglia posteriore / rear pad

MODELLO MODEL	CC	ANNO YEAR	POSIZIONE POSITION
ZX	600	1988-1990	**R**
ZZR	600	1990-1992	**R**
KLR	650	1987-1994	**FL**
GPX R	750	1986-1990	**R**
GPX R	750	1986-1990	**FL/FR**
ZEPHYR	750	1991-1999	**R**
ZEPHYR	750	1991-1999	**FL/FR**
GPZ R	900	1990-2003	**R**
GTR	1000	1994-2006	**FL/FR**
ZG A CONCOURSE	1000	1994-2006	**FL/FR**
ZX	1000	1988-1992	**R**
ZX	1000	1988-1992	**FL/FR**
ZEPHYR	1100	1993-1998	**R**

MODELLO MODEL	CC	ANNO YEAR	POSIZIONE POSITION
ZEPHYR	1100	1993-1995	**FL/FR**
ZX11 NINJA	1100	1989-1990	**R**
ZX11 NINJA	1100	1989-1990	**FL/FR**
ZZR	1100	1990-1992	**R**
SUZUKI			
DR BIG	80	1991	**FL**
GSF BANDIT	250	1990	**FL**
GSF BANDIT	400	1989-1992	**FL**
GS E	500	1989-1994	**FR**
DR BIG S	800	1991-1996	**FL**
VX	800	1990-1993	**FL**
GSX G	1100	1991-1994	**FL/FR**

700

CM44
- Sinterizzata off-road
- Offroad sintered pad

SM1
- Semimetallica polivalente
- Semi-metallic pad

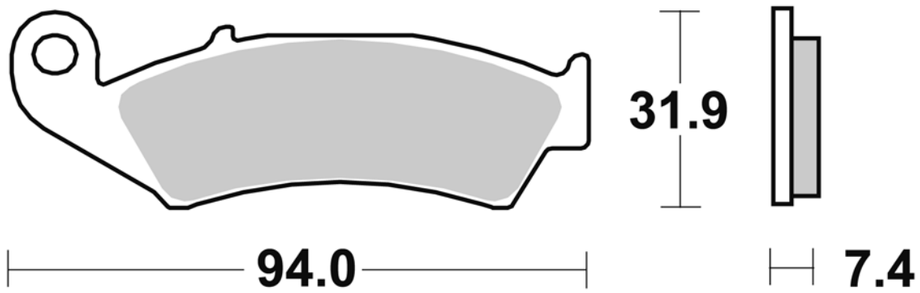

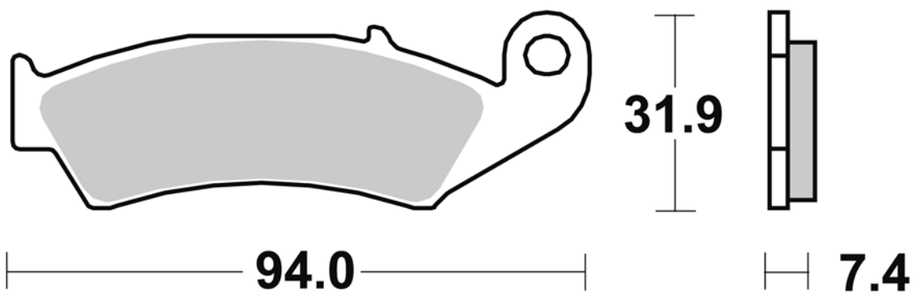

MODELLO MODEL	CC	ANNO YEAR	POSIZIONE POSITION
HONDA			
CR E	125	1987-1994	**FL**
CR R	125	1987-1994	**FL**
AX-1	250	1988	**FL/FR**
CR E	250	1987-1994	**FL**
CR R	250	1987-1994	**FL**
CRM R	250	1989-1993	**FL**

MODELLO MODEL	CC	ANNO YEAR	POSIZIONE POSITION
NX	250	1989	**FL**
XL S	250	1988-1991	**FL**
XR R	250	1988-1995	**FL**
CR E	500	1987-1993	**FL**
CR R	500	1987-1993	**FL**
XR R	600	1991-1993	**FL**
XR R (Rear Drum Model)	600	1988-1990	**FL**

701

CM46
- Sinterizzata off-road uso racing
- Offroad sintered pad racing use

CM44
- Sinterizzata off-road
- Offroad sintered pad

SM1
- Semimetallica polivalente
- Semi-metallic pad

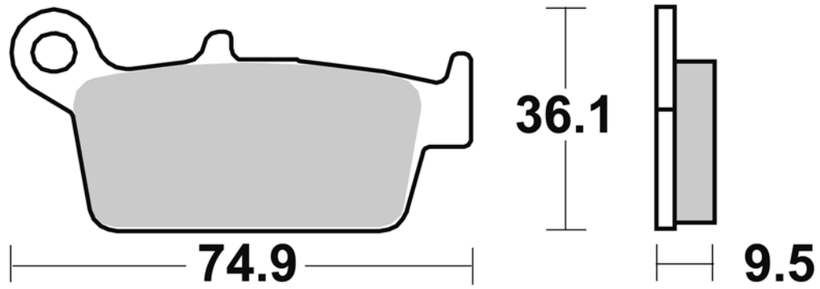

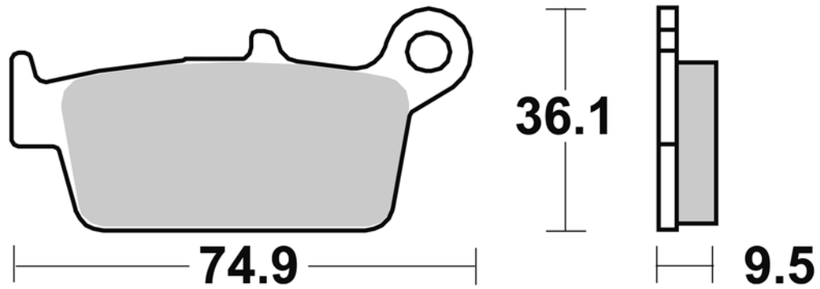

MODELLO MODEL	CC	ANNO YEAR	POSIZIONE POSITION
FANTIC M.			
CABALLERO REGOLARITA COMPETIZIONE	125	2007-2009	**R**
GAS GAS			
EC ROLLER	50	2001	**R**
EC	125	2000-2009	**R**
MC	125	2000-2009	**R**
EC	200	2000-2008	**R**
HOBBY	200	2007	**R**
EC	250	2000-2009	**R**
MC	250	2000-2009	**R**
EC	300	2000-2009	**R**
MC	300	2000-2009	**R**
EC	400	2002	**R**
EC	400	2006-2007	**R**
FSE	400	2002	**R**
MC	400	2002	**R**
MC	400	2006-2007	**R**
PAMPERA	400	2006-2007	**R**
EC	450	2003-2007	**R**
FSE	450	2003-2006	**R**
FSR	450	2007	**R**
MC	450	2003	**R**
MC	450	2007	**R**
HONDA			
DREAM	50	1997	**R**
NSR	50	1987-1992	**R**
CR R	80	1992-2002	**R**
NSR R	80	1987-1992	**R**
CR R	85	2003-2007	**R**
CR E	125	1987-2001	**R**
CR R	125	1987-2001	**R**
SL	230	1997-2001	**R**
CR E	250	1987-2001	**R**
CR R	250	1987-2001	**R**
CRM R	250	1991-1993	**R**
XL S	250	1988-1991	**R**
XR R	250	1990-2004	**R**
XR R	400	1995-2007	**R**
XR SUPERMOTARD	400	2000-2007	**R**
XR R	440	2006-2007	**R**
CR E	500	1987-2001	**R**
CR R	500	1987-2001	**R**
XR R	600	1991-2000	**R**
NT HAWK GT	650	1988-1990	**R**

MODELLO MODEL	CC	ANNO YEAR	POSIZIONE POSITION
NTV BROS	650	1988-1990	**R**
XR L	650	1993-2012	**R**
XR R	650	2000-2008	**R**
XR SUPERMOTARD	650	2000-2008	**R**
HONDA-HM			
CRE	80	1998-2002	**R**
CR	85	2003-2007	**R**
CR E SUPERMOTARD	125	2000-2001	**R**
CR E SUPERMOTARD	125	2000-2001	**R**
CRE	125	1995-2001	**R**
CR E SUPERMOTARD	250	2000-2001	**R**
CR E SUPERMOTARD	250	2000-2001	**R**
CRE	250	1997-2001	**R**
CRE	260	1995-1998	**R**
KAWASAKI			
KX	125	1995-2008	**R**
KLR	250	1995-2007	**R**
KLX S	250	2009-2014	**R**
KX	250	1995-2008	**R**
KLX R	300	1997-2007	**R**
KLX R	400	2003-2007	**R**
KX	500	1996-2004	**R**
KYMCO			
COBRA CROSS	50	2000-2006	**FL**
COBRA RACER	50	2000-2006	**FL**
EASY	50	2001	**FL**
K 12	50	1995-1999	**FL**
KB	50	1994-2000	**FL**
LOOPING	50	1998	**FL**
SCOUT	50	1996-2006	**FL**
TOP BOY	50	1998-2006	**FL**
TOP BOY OFFROAD	50	1999	**FL**
ZX SUPER FEVER	50	1996-2006	**FL**
KB	100	1999-2000	**FL**
TOP BOY	100	1997	**FL**
KB FREEWAY	150	1995	**FL**
SUPER 9	250	2000	**FL**
SHERCO			
2.5i 4T ENDURO	250	2006-2011	**R**
4.5i 4T ENDURO	450	2007-2011	**R**
5.1i 4T ENDURO	510	2006-2011	**R**
SUZUKI			
DR SM	125	2008-2012	**R**
RM	125	1996-2009	**R**

Le immagini hanno il solo scopo di presentare i prodotti.
The images used are aimed at presenting the products only.

FL > pastiglia anteriore sinistra / front left pad
FR > pastiglia anteriore destra / front right pad
R > pastiglia posteriore / rear pad

MODELLO MODEL	CC	ANNO YEAR	POSIZIONE POSITION
SV SM	125	2005-2006	R
RM	250	1996-2012	R
DRZ E	400	2000-2008	R
DRZ S	400	2000-2009	R
DRZ SM	400	2005-2009	R
SYM			
SR SUNRISE	100	1997	FL
TM			
EN	80	2002-2003	R
MX JR	85	2003-2014	R
EN	125	2002-2004	R
MX	125	2003-2004	R
SMR	125	2005-2011	R
EN	250	2002-2004	R
MX	250	2002-2004	R
MX	400	2003	R
SMF F	400	2002	R
SMR F	400	2003	R

MODELLO MODEL	CC	ANNO YEAR	POSIZIONE POSITION
SMR F	450	2004-2009	R
SMX F	450	2003-2011	R
SMR F	530	2003-2009	R
SMX F	600	2003	R
SMX F	600	2003	R
SMX F	660	2004-2010	R
YAMAHA			
WR	125	1998-2002	R
YZ	125	1998-2002	R
WR	250	1998-2001	R
WR F	250	2001-2002	R
YZ	250	1998-2002	R
YZ F	250	2001-2002	R
WR F	400	1999-2000	R
YZ F	400	1999-2000	R
WR F	426	2001-2002	R
YZ F	426	2000-2002	R

702

CM44
- Sinterizzata off-road
- Offroad sintered pad

SM1
- Semimetallica polivalente
- Semi-metallic pad

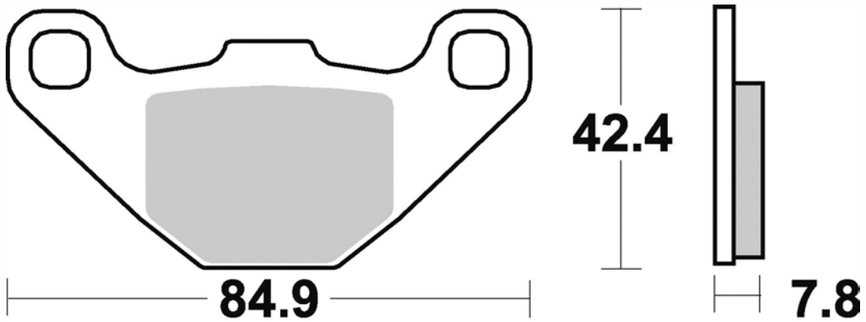

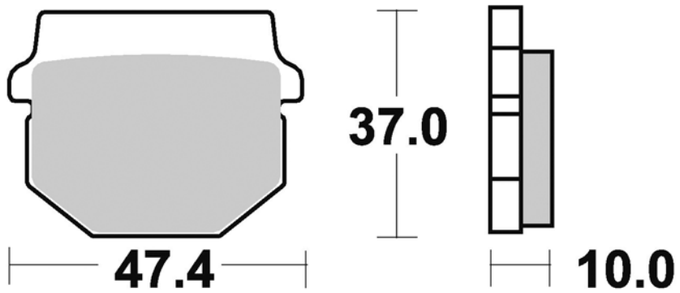

MODELLO MODEL	CC	ANNO YEAR	POSIZIONE POSITION
ADLY			
INTERCEPTOR	150	2005	FL/FR
INTERCEPTOR	150	2005	R
ATV	300	2005	FL/FR
ATV	300	2005	R
AEON			
URBAN	125	2011	R
ELITE i	200	2011	R
TWO HUNDRED	200	2006	FL
TWO HUNDRED	200	2006	R
COBRA	220	2006-2011	FL/FR
OVERLAND	300	2006-2007	FL/FR
COBRA	350	2011-2012	FL/FR
CROSSLAND RX	350	2011	FL/FR
URBAN i	350	2011	R
COBRA	400	2010-2013	FL/FR
CROSSLAND 2x4	400	2012-2013	FL/FR
CROSSLAND 4x4	400	2012-2013	FL/FR
APRILIA			
RS4 (J.Juan Rear Caliper)	50	2011-2014	R

MODELLO MODEL	CC	ANNO YEAR	POSIZIONE POSITION
RS4 (J.Juan Rear Caliper)	125	2011-2014	R
BOMBARDIER			
RALLY 2x4	200	2003-2007	FL/FR
DERBI			
SENDA DRD RACING R	50	2011-2012	R
SENDA DRD RACING SM	50	2011-2013	R
SENDA DRD X-TREME R	50	2011-2012	FL
SENDA DRD X-TREME R	50	2011-2012	R
SENDA DRD X-TREME SM	50	2011-2012	R
FACTORY			
HELIX	50	2004	R
REX	50	2004	R
HELIX	100	2004	R
REX	100	2004	R
GILERA			
STALKER DT	50	2006	FL
KAWASAKI			
AR	80	1981-1983	FL
KD	80	1988	FL
KMX	80	1987	FL

MODELLO MODEL	CC	ANNO YEAR	POSIZIONE POSITION
KX	80	1984-1996	FL
KX	100	1988-1996	FL
KDX	125	1990-2003	FL
KMX	125	1986-1990	FL
KMX	125	1999-2003	FL
KMX	200	1988-1989	FL
KX	250	1983	FL
KXT	250	1984-1986	R
KXT	250	1985-1986	FL/FR
KLR	570	1985-1991	FL
MALAGUTI			
CENTRO SL 4T	50	2008-2009	FL
CENTRO SL 4T	50	2008	FL
CENTRO SL 4T	50	2009-2010	FL
CENTRO SL 4T	50	2010-2011	FL
CENTRO SL 4T	50	2011	FL
F10	50	1992-1994	FL
F12R PHANTOM L.C.	50	2007-2011	FL
MZ			
MOSKITO SX	50	2000	FL
PEUGEOT			
SQUAB (Hengtong)	50	1994-2001	FL
TREKKER (Hengtong)	50	1997	FL
VIVACITY (Hengtong)	50	2005	FL
VIVACITY (Hengtong)	100	2005	FL
PGO			
COMET	50	1992	FL
GALAXY	50	1993	FL
MEGA FIFTY	50	1999	FL
X-RIDER	50	2003	R
X-RIDER	150	2003	R

MODELLO MODEL	CC	ANNO YEAR	POSIZIONE POSITION
PIAGGIO			
NRG POWER DD	50	2005-2013	FL
NRG POWER DT	50	2005-2011	FL
NRG POWER PUREJET	50	2004-2011	FL
NRG PUREJET	50	2004-2010	FL
NRG SILVER BULLETT	50	2010	FL
POLARIS			
PHOENIX (Rear disc model)	200	2005-2008	FL/FR
PHOENIX (Rear disc model)	200	2005-2008	R
PHOENIX (Rear drum model)	200	2006-2012	FL/FR
SAWTOOTH	200	2006-2007	FL/FR
SAWTOOTH	200	2006-2007	R
RIEJU			
MRT PRO SUPERMOTARD	50	2009-2014	R
SUZUKI			
ADDRESS AH	50	1991	FL
SEPIA scooter	50	1992	FL
ADDRESS CP	80	1992	FL
RM	80	1990-1995	FL
RM	80	1990-2001	R
RM X	80	1986-1989	FL
RM	85	2002-2004	R
ADDRESS AH V	100	1991	FL
UE	125	2001	FL
TGB			
303 R	50	1999	FL
409 F	50	2000	FL
AKROS	50	1995-1998	FL
ERGON	50	1994	FL
303 R	125	1999	FL
409 F	125	2002	FL
409 F	150	2002	FL

703

CM44
- Sinterizzata off-road
- Offroad sintered pad

SM1
- Semimetallica polivalente
- Semi-metallic pad

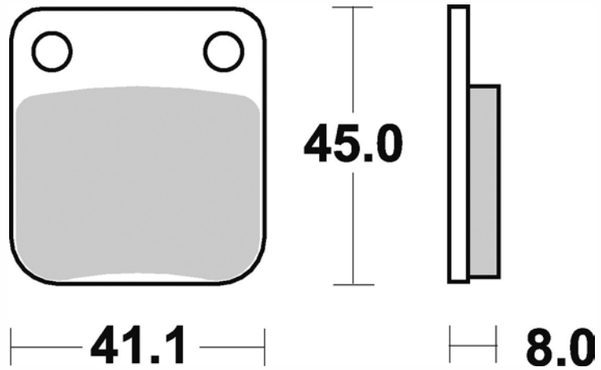

MODELLO MODEL	CC	ANNO YEAR	POSIZIONE POSITION
ARCTIC CAT			
DVX	400	2004-2006	FL/FR
DAELIM			
CORDI / SE R	50	2005-2008	FL
DELFINO	50	1999-2001	FL
E-FIVE	50	2003	FL
HISTORY	50	2001	FL
TAPO	50	1999	FL
VIVO	50	1999	FL
125 II	125	1997	FL
ADVANCE	125	1995-1996	R
EVOLUTION	125	1995-2000	FL
F1	125	2007	R
HISTORY	125	2001	FL
HISTORY	125	2001	R
MESSAGE II	125	2000	FL
OTELLO	125	1999	FL
OTELLO	125	2007	R
OTELLO DLX	125	2001-2006	FL

MODELLO MODEL	CC	ANNO YEAR	POSIZIONE POSITION
OTELLO DLX	125	2001-2006	R
HONDA			
CB	50	1980-1981	FL
MB S	50	1980-1982	FL
MB5	50	1981-1982	FL
MBX	50	1980-1982	FL
MRX	50	1988	FL
CR R	80	1986-1989	FL
MBX FWD	80	1983-1986	FL
CB	125	1983-1986	FL
ATC R	250	1981-1982	FL/FR
TRX EX	400	1999-2008	FL/FR
KAWASAKI			
ELIMINATOR	125	1998-1999	FL
KLX	125	2010-2014	R
KLX D-TRACKER	125	2010-2014	R
KVF	300	1999-2001	FL/FR
KFX	400	2002-2006	FL/FR
KVF	400	1999	FL/FR

PADS / PASTIGLIE

Le immagini hanno il solo scopo di presentare i prodotti.
The images used are aimed at presenting the products only.

FL > pastiglia anteriore sinistra / front left pad
FR > pastiglia anteriore destra / front right pad
R > pastiglia posteriore / rear pad

MODELLO MODEL	CC	ANNO YEAR	POSIZIONE POSITION
PGO			
X-RIDER	125	2003	**R**
SUZUKI			
DR	125	1986-2002	**FL**
TS X	125	1985-1989	**FL**
DR	200	1986-1989	**FL**
DR S	250	1986-1989	**FL**
LT F OZARK (Rear Drum Model)	250	2002-2014	**FL/FR**
LT F EIGER	400	2002-2007	**FL/FR**
LT A F VINSON	500	2002-2007	**FL/FR**
YAMAHA			
YFS R BLASTER	200	2003-2006	**FL/FR**
YFM AN BRUIN 2x4	250	2005	**FL/FR**
YFM BEAR TRACKER	250	2001-2004	**FL/FR**
YFM BIG BEAR	250	2007-2008	**FL/FR**

MODELLO MODEL	CC	ANNO YEAR	POSIZIONE POSITION
YFM WARRIOR	300	1989	**FL/FR**
YFM BIG BEAR	350	1999	**FL/FR**
YFM BRUIN 2x4/4x4	350	2004-2006	**FL/FR**
YFM FX WOLVERINE	350	1995	**FL/FR**
YFM GRIZZLY 2x4/4x4	350	2007-2008	**FL/FR**
YFM WOLVERINE 2WD	350	2006-2008	**FL/FR**
YFM X WARRIOR	350	1989-2003	**FL/FR**
YFM X WARRIOR	350	1989-2003	**R**
YFZ BANSHEE	350	1990-2009	**FL/FR**
YFM BIG BEAR	400	2000-2008	**FL/FR**
YFM KODIAK ALL	400	1999-2004	**FL/FR**
YFM FAR KODIAK	450	2003	**FL/FR**
YFM GRIZZLY 4x4	450	2007-2014	**FL/FR**
YFM WOLVERINE 4x4	450	2006-2008	**FL/FR**

704

CM55
- Sinterizzata stradale ant. uso sportivo
- Front sintered pad

SM1
- Semimetallica polivalente
- Semi-metallic pad

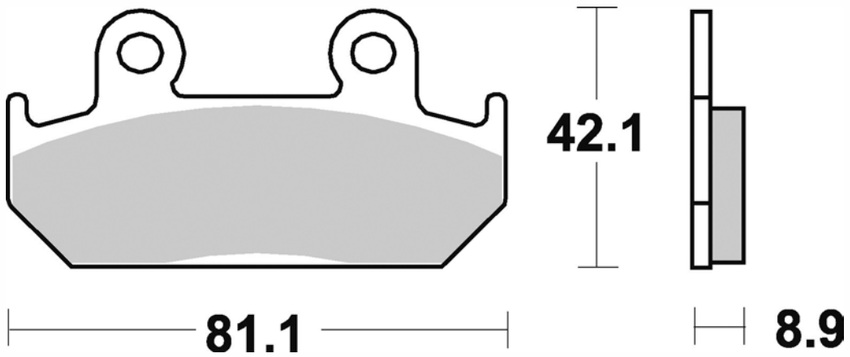

MODELLO MODEL	CC	ANNO YEAR	POSIZIONE POSITION
HONDA			
CBR F	250	1986-1987	**FR**
CBR HURRICANE	250	1987-1988	**FR**
NSR R	250	1987	**FL**
VT F	250	1988	**FL**
VTR	250	1989-1990	**FL**
ATC	350	1985	**FL/FR**
CB	350	1987	**FL/FR**

MODELLO MODEL	CC	ANNO YEAR	POSIZIONE POSITION
CB N	400	1986-1988	**FR**
CBR R	400	1987-1988	**FL/FR**
VFR R	400	1986-1990	**FL/FR**
VFR Z	400	1986-1987	**FL/FR**
CB S	450	1985-1989	**FL/FR**
CBR F	600	1987-1994	**FL/FR**
XRV AFRICA TWIN	750	1990-1992	**FL/FR**

705

CM44
- Sinterizzata off-road
- Offroad sintered pad

SM1
- Semimetallica polivalente
- Semi-metallic pad

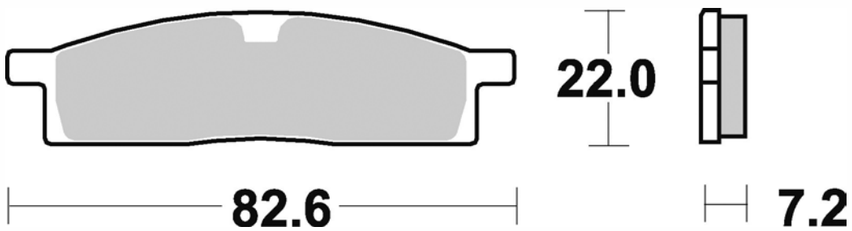

MODELLO MODEL	CC	ANNO YEAR	POSIZIONE POSITION
YAMAHA			
DT LCD	50	1996	**FL**
YZ	80	1986-2001	**FL**
YZ	85	2002-2015	**FL**
TT R	125	2000-2007	**FL**

MODELLO MODEL	CC	ANNO YEAR	POSIZIONE POSITION

707

CM55
- Sinterizzata stradale ant. uso sportivo
- Front sintered pad

SM1
- Semimetallica polivalente
- Semi-metallic pad

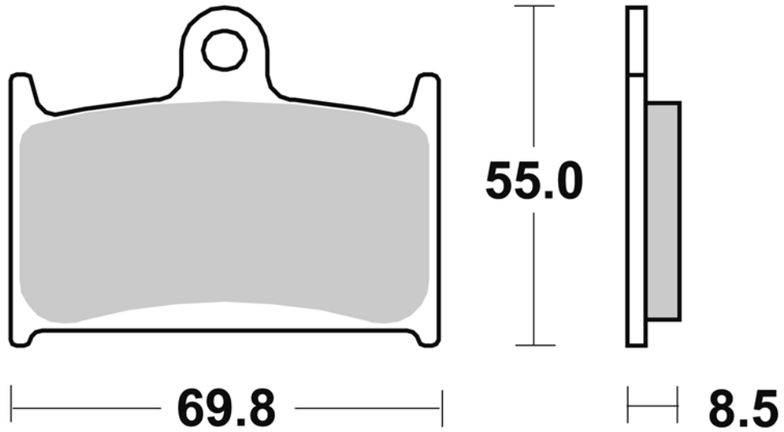

MODELLO MODEL	CC	ANNO YEAR	POSIZIONE POSITION
MZ			
1000 S	1000	2003	**FL/FR**
1000 SN- SF	1000	2005	**FL/FR**
SUZUKI			
GSX R	750	1989-1993	**FL/FR**
GSX R LIMITED EDITION	750	1989-1990	**FL/FR**
GSX R	1100	1989-1992	**FL/FR**
GSF BANDIT	1200	1996-2000	**FL/FR**
TRIUMPH			
BABY SPEED	600	2001-2002	**FL/FR**
DAYTONA	600	2003-2007	**FL/FR**
SPEED FOUR	600	2003-2006	**FL/FR**
TT	600	2000-2003	**FL/FR**
DAYTONA	650	2005-2006	**FL/FR**
DAYTONA	750	1991-1993	**FL/FR**
DAYTONA	900	1994-1996	**FL/FR**
SPEED TRIPLE T309	900	1994-1997	**FL/FR**
SPEED TRIPLE T509	900	1997-1998	**FL/FR**
SPRINT	900	1994-1998	**FL/FR**
TROPHY	900	1996-2000	**FL/FR**
DAYTONA T595	950	1996-1998	**FL/FR**
DAYTONA T955i	955	1999-2006	**FL/FR**

MODELLO MODEL	CC	ANNO YEAR	POSIZIONE POSITION
SPEED TRIPLE T955	955	1999-2004	**FL/FR**
SPRINT RS	955	2000-2004	**FL/FR**
SPRINT ST	955	1998-2004	**FL/FR**
DAYTONA	1000	1991-1995	**FL/FR**
SPRINT GT ABS	1050	2010-2014	**FL/FR**
SPRINT ST T1050	1050	2005-2011	**FL/FR**
SPRINT ST T1050 ABS	1050	2005-2008	**FL/FR**
DAYTONA	1200	1991-1997	**FL/FR**
TIGER EXPLORER	1200	2012-2014	**FL/FR**
TIGER EXPLORER XC	1200	2013-2014	**FL/FR**
TROPHY	1200	1996-2003	**FL/FR**
THUNDERBIRD	1600	2009-2014	**FL/FR**
THUNDERBIRD COMMANDER	1700	2014	**FL/FR**
THUNDERBIRD LT	1700	2014	**FL/FR**
THUNDERBIRD STORM	1700	2011-2014	**FL/FR**
ROCKET III	2300	2004-2007	**FL/FR**
YAMAHA			
TZ COMPETITION	125	1994-1997	**FR**
FZR R	250	1989	**FL/FR**
TZ COMPETITION	250	1990-1991	**FL/FR**
TZ GP	250	1992-1997	**FL/FR**
FZR R	750	1989-1992	**FL/FR**

Le immagini hanno il solo scopo di presentare i prodotti.
The images used are aimed at presenting the products only.

FL > pastiglia anteriore sinistra / front left pad
FR > pastiglia anteriore destra / front right pad
R > pastiglia posteriore / rear pad

709

SM1
- Semimetallica polivalente
- Semi-metallic pad

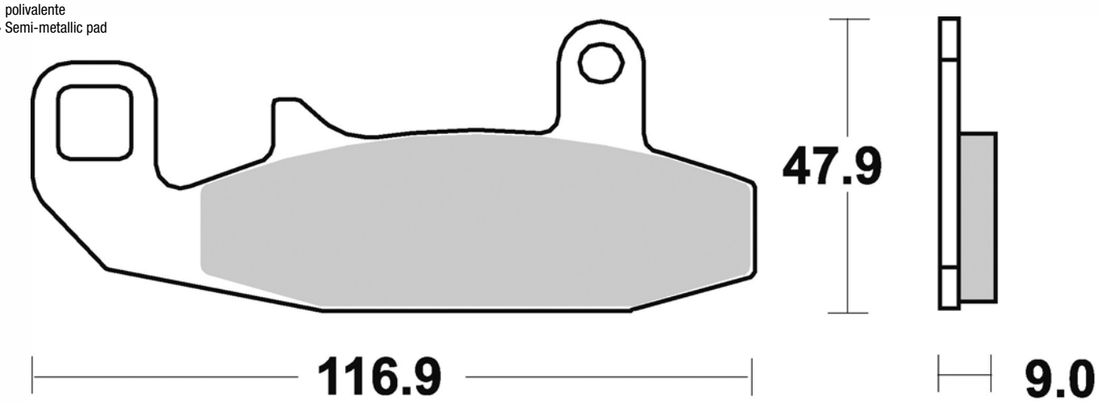

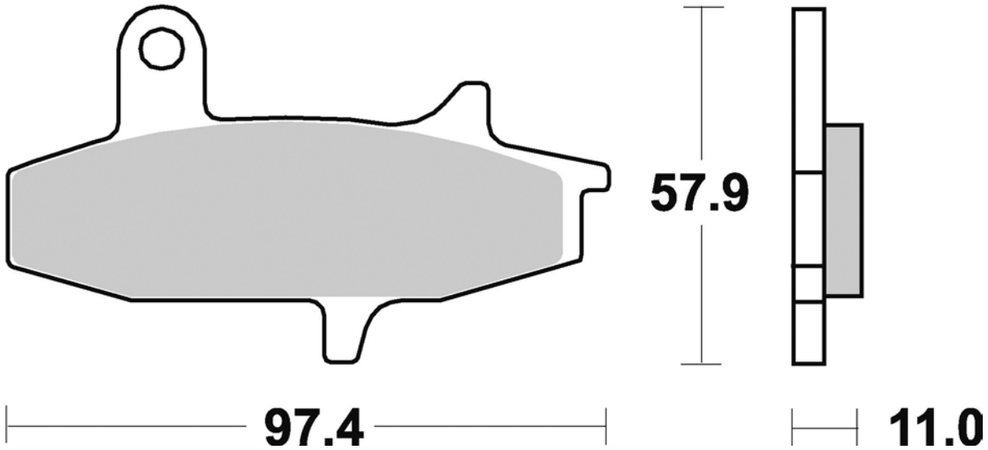

MODELLO MODEL	CC	ANNO YEAR	POSIZIONE POSITION
SUZUKI			
DR DJEBEL	600	1989	**FL**
DR	650	1991-1995	**FL**
DR DJEBEL	650	1990-1995	**FL**
DR R	650	1990-1993	**FL**
DR RE	650	1994-1995	**FL**

MODELLO MODEL	CC	ANNO YEAR	POSIZIONE POSITION
DR RS	650	1990-1991	**FL**
DR RSE	650	1991-1993	**FL**
DR BIG	750	1988-1989	**FL**
DR BIG S	750	1987-1988	**FL**
DR BIG S	800	1989-1990	**FL**

711

CM56
- Sinterizzata stradale post. uso sportivo
- Rear sintered pad

SM1
- Semimetallica polivalente
- Semi-metallic pad

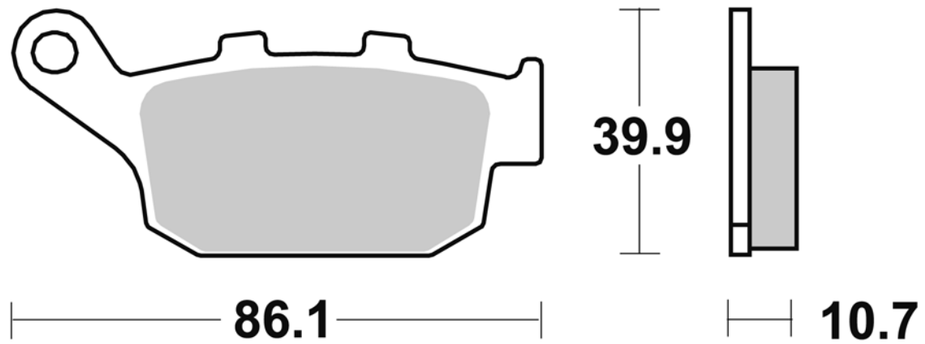

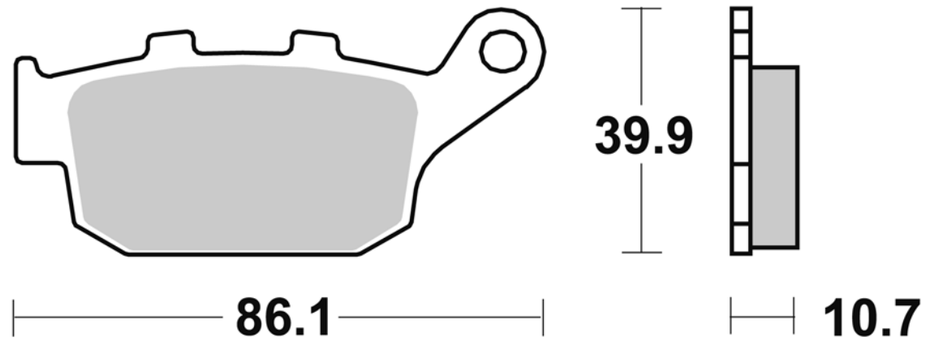

MODELLO MODEL	CC	ANNO YEAR	POSIZIONE POSITION
BUELL			
BLAST	500	2001-2007	**R**
XB9R FIREBOLT	984	2002-2006	**R**
XB9S LIGHTNING	984	2002-2006	**R**
XB9SX CityX	984	2005-2009	**R**
M2 CYCLONE	1200	1998-2002	**R**
M2 CYCLONE	1200	1998-2002	**R**
S1 LIGHTNING	1200	1998-2002	**R**
S3 THUNDERBOLT	1200	1998-2002	**R**
S3T THUNDERBOLT	1200	1998-2002	**R**
X1 LIGHTNING	1200	1999-2002	**R**
XB12R FIREBOLT	1200	2004-2009	**R**
XB12S LIGHTNING	1200	2003-2008	**R**
XB12SS / SCG	1200	2009	**R**
XB12SS LIGHTNING LONG	1200	2005-2006	**R**
XB12X ULYSSES	1200	2005-2007	**R**
XBRR	1340	2006	**R**
HONDA			
YUPI	50	1990	**FL**
PANTHEON	125	2003-2007	**R**
PANTHEON	150	2003-2007	**R**
CB F HORNET	250	1996-2001	**R**
CBR HURRICANE	250	1987-1988	**R**
CBR RJ	250	1988-1990	**R**
FORESIGHT	250	2001-2007	**R**
NSR R	250	1988-1989	**R**
VTR	250	1998	**R**
XELVIS V-25	250	1997	**R**
CB	400	1989-1991	**R**
NTV BROS	400	1988-1995	**R**

MODELLO MODEL	CC	ANNO YEAR	POSIZIONE POSITION
VFR R	400	1987-1988	**R**
VFR R	400	1991-1993	**R**
CBR F	600	1989-1990	**R**
NTV BROS HAWK	600	1988-1990	**R**
XL V TRANSALP	600	1991-1999	**R**
NTV DEAUVILLE	650	1998-2001	**R**
NTV REVERE	650	1988-1993	**R**
NX DOMINATOR	650	1988-1996	**R**
XL V TRANSALP	650	2000-2007	**R**
XRV AFRICA TWIN	650	1988-1989	**R**
NC S	700	2012-2013	**R**
NC X	700	2012-2013	**R**
XL V TRANSALP	700	2008-2011	**R**
XL V TRANSALP ABS	700	2008-2011	**R**
XRV AFRICA TWIN	750	1990-2002	**R**
SUZUKI			
XF FREEWIND	650	1997-2002	**R**
TRIUMPH			
DAYTONA	600	2003-2007	**R**
SPEED FOUR	600	2003-2006	**R**
DAYTONA	650	2005-2006	**R**
DAYTONA	675	2006-2013	**R**
DAYTONA R	675	2011-2013	**R**
STREET TRIPLE	675	2007-2014	**R**
STREET TRIPLE R	675	2009-2014	**R**
TIGER	800	2010-2014	**R**
TIGER ABS	800	2011-2014	**R**
TIGER XC	800	2010-2014	**R**
TIGER XC ABS	800	2010-2014	**R**

Le immagini hanno il solo scopo di presentare i prodotti.
The images used are aimed at presenting the products only.

FL > pastiglia anteriore sinistra / front left pad
FR > pastiglia anteriore destra / front right pad
R > pastiglia posteriore / rear pad

712

SM1
- Semimetallica polivalente
- Semi-metallic pad

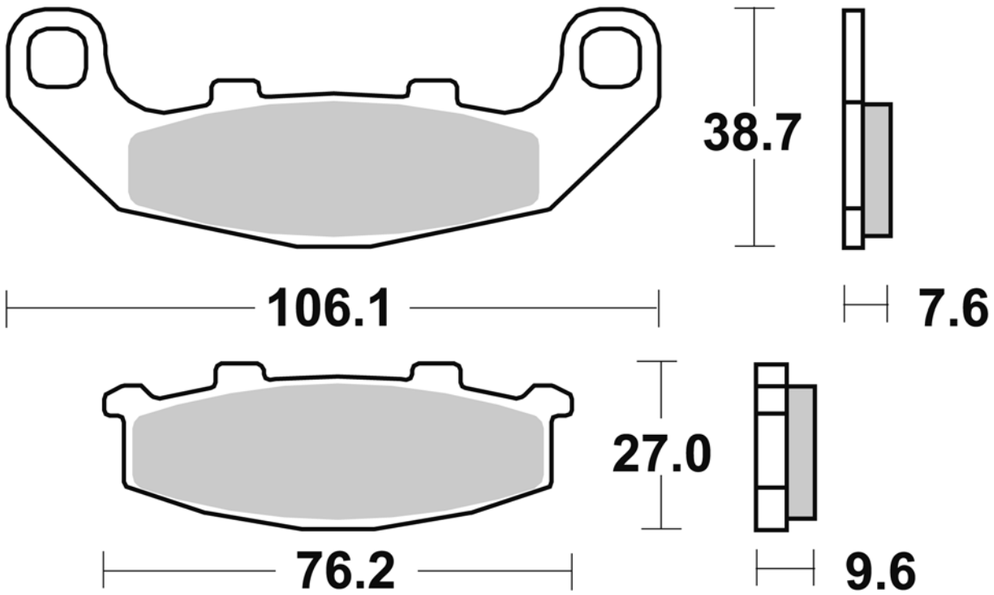

MODELLO MODEL	CC	ANNO YEAR	POSIZIONE POSITION
KAWASAKI			
EX R NINJA	250	1988-2007	**R**
GPX R	250	1988-1989	**FL**
GPX R	250	1988-1989	**R**
KR	250	1988-1989	**FL/FR**
KR	250	1990-1992	**R**
ZXR R	250	1989	**FL/FR**
ZXR R	250	1989	**R**
GPX R	400	1987-1989	**FL/FR**

MODELLO MODEL	CC	ANNO YEAR	POSIZIONE POSITION
GPZ	400	1986-1987	**FL/FR**
GPZ	400	1986-1987	**R**
GPZ R	400	1989	**FL/FR**
GPZ R	400	1989	**R**
ZX	400	1988-1989	**FL/FR**
GPZ S	500	1993-2006	**FL/FR**
ZEPHYR	500	1991-1992	**R**
SUZUKI			
RGV GAMMA	250	1991-1996	**R**

715

CM55
- Sinterizzata stradale ant. uso sportivo
- Front sintered pad

SM1
- Semimetallica polivalente
- Semi-metallic pad

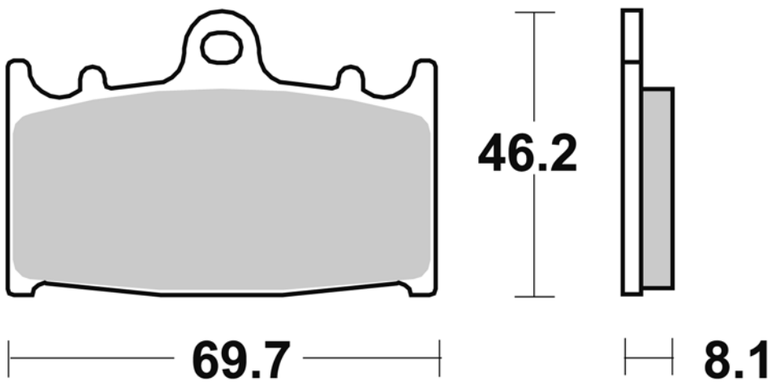

MODELLO MODEL	CC	ANNO YEAR	POSIZIONE POSITION
KAWASAKI			
KR	250	1990-1992	**FL/FR**
ZXR	400	1989-1990	**FL/FR**
ZZR	500	1990	**FL/FR**
ZX6R NINJA	600	1995-1997	**FL/FR**
ZZR	600	1990-2006	**FL/FR**

MODELLO MODEL	CC	ANNO YEAR	POSIZIONE POSITION
ZXR	750	1989-1995	**FL/FR**
ZXR R	750	1989-1995	**FL/FR**
GPZ R	900	1990-1998	**FL/FR**
ZX9R NINJA	900	1994-1995	**FL/FR**
VERSYS	1000	2012-2014	**FL/FR**
ZZR	1100	1990-1999	**FL/FR**

MODELLO MODEL	CC	ANNO YEAR	POSIZIONE POSITION
ZZR	1200	2002-2005	**FL/FR**
VN VOYAGER ABS	1700	2009-2014	**FL/FR**
VN VOYAGER CUSTOM ABS	1700	2011-2014	**FL/FR**
VN	2000	2004-2007	**FL/FR**
VN CLASSIC	2000	2008-2010	**FL/FR**
SUZUKI			
RG F GAMMA	125	1992	**FL**
RG GAMMA	200	1991	**FL**
GSX RR	250	1989	**FL/FR**
RGV GAMMA	250	1989-1996	**FL/FR**
GOOSE	350	1992	**FR**
GS	400	1989	**FL**
GSF BANDIT	400	1993	**FL/FR**
GSR	400	2006-2008	**FL/FR**
GSX KATANA	400	1992	**FL**

MODELLO MODEL	CC	ANNO YEAR	POSIZIONE POSITION
GSX R	400	1988-1989	**FL/FR**
GSR	600	2006-2010	**FL/FR**
GSX R	600	1997-2003	**FL/FR**
GSF BANDIT	650	2007-2012	**FL/FR**
GSF BANDIT ABS	650	2011-2014	**FL/FR**
GSX F	650	2008-2012	**FL/FR**
GSX F ABS	650	2008-2014	**FL/FR**
GSX R	750	2000-2003	**FL/FR**
SV	1000	2003-2007	**FL/FR**
SV S	1000	2003-2007	**FL/FR**
TL S	1000	1997-2001	**FL/FR**
GSF BANDIT	1200	2006	**FL/FR**
GSF BANDIT	1250	2007-2011	**FL/FR**
GSF BANDIT S	1250	2011-2012	**FL/FR**
GSX FA	1250	2010-2014	**FL/FR**

716

CM55
- Sinterizzata stradale ant. uso sportivo
- Front sintered pad

P30
- Sinterizzata scooter
- Scooter sintered pad

SM1
- Semimetallica polivalente
- Semi-metallic pad

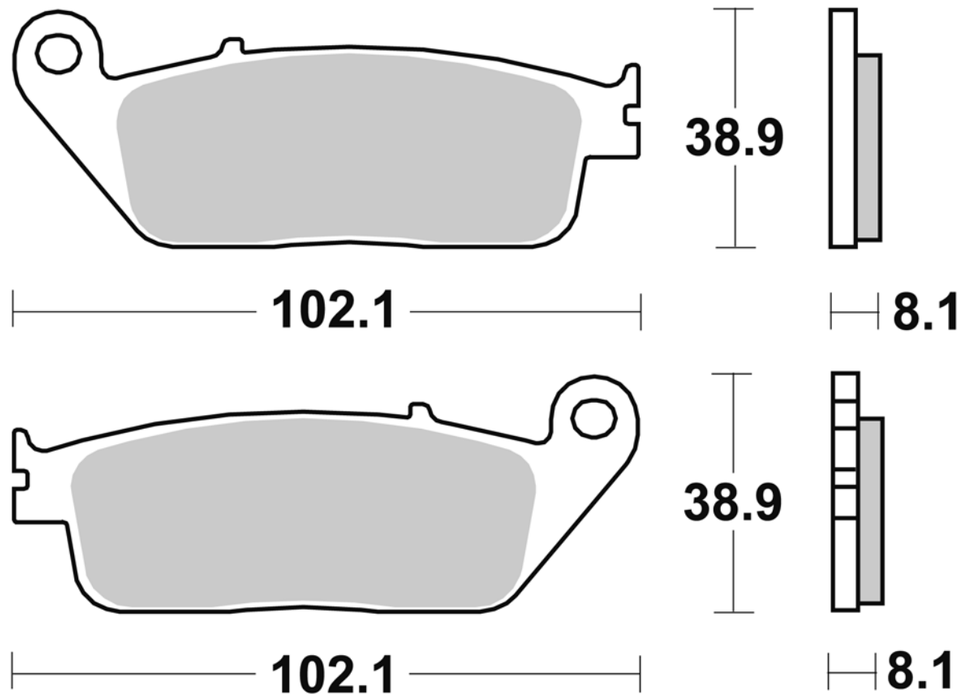

MODELLO MODEL	CC	ANNO YEAR	POSIZIONE POSITION
BMW			
C 600 SPORT	600	2012-2014	**FL/FR**
C 600 SPORT	600	2012-2014	**R**
C 650 GT	650	2012-2014	**FL/FR**
C 650 GT	650	2012-2014	**R**
BUELL			
BLAST	500	2001-2007	**FR**
CAGIVA			
GRAN CANYON	900	1999-2004	**FL/FR**
NAVIGATOR	1000	2000-2005	**FL/FR**
HONDA			
RS GP	125	1990	**FR**
RS R	125	1990	**FR**
SH i	125	2013	**FL**
XLR R	125	1997-2003	**FL**
XR L	125	2003-2006	**FL**
SH i	150	2013	**FL**
CB	250	1991-2006	**FL**
CBR R	250	2011-2013	**FR**

MODELLO MODEL	CC	ANNO YEAR	POSIZIONE POSITION
CBR RJ	250	1988-1990	**FR**
VF V TWIN MAGNA	250	1997	**FL**
VTR	250	1998	**FL**
XELVIS V-25	250	1997	**FR**
CBR R ABS	300	2014	**FR**
CB	400	1989-1991	**FR**
CB FOUR	400	1997	**FL/FR**
CBR RR	400	1988-1990	**FL/FR**
XR R	400	2006-2007	**FL**
XR SUPERMOTARD	400	2006-2007	**FL**
XR R	440	2006-2007	**FL**
CB	500	1993-1996	**FR**
CB F HORNET	600	1998-2013	**FL/FR**
CB F HORNET S	600	2000-2004	**FL/FR**
CBF	600	2004-2007	**FL/FR**
CBF N	600	2003-2007	**FL/FR**
CBF S	600	2008-2011	**FL/FR**
CBF S ABS	600	2003-2007	**FL/FR**
CBR F	600	1995-1998	**FL/FR**

Le immagini hanno il solo scopo di presentare i prodotti.
The images used are aimed at presenting the products only.

FL > pastiglia anteriore sinistra / front left pad
FR > pastiglia anteriore destra / front right pad
R > pastiglia posteriore / rear pad

MODELLO MODEL	CC	ANNO YEAR	POSIZIONE POSITION
CBR F	600	2011-2013	FL/FR
VT C SHADOW	600	1994-2007	FL
XL V TRANSALP	600	1994-1996	FL
FMX	650	2005-2008	FL
NT HAWK GT	650	1988-1990	FL
NTV BROS	650	1988-1990	FL/FR
NTV REVERE	650	1988-1998	FL
NC S	700	2012-2013	FR
NC X	700	2012-2013	FR
CB F	750	1992-1995	FL/FR
CB N	750	1992-1995	FL/FR
CB Seven Fifty	750	1992-1995	FL/FR
VF SHADOW	750	1994-2007	FL
VFR F	750	1988-1997	FL/FR
VT C2 SHADOW A.C.E.	750	1997-2008	FL
PACIFIC COAST	800	1989-1992	FL/FR
CBF	1000	2006-2011	FL/FR
CBR F	1000	1989-1992	FL/FR
ST PAN EUROPEAN	1100	1990-2001	FL/FR
ST PAN EUROPEAN	1100	1996-2001	R
VT SHADOW ACE-AERO-C2-C3	1100	1995-1998	FR
GL F6C VALKYRIE	1500	1997-2003	FL/FR
KAWASAKI			
J300	300	2014	FR
J300 ABS	300	2014	FR
J300 ABS SPECIAL EDITION	300	2014	FR
J300 SPECIAL EDITION	300	2014	FR
Z 750	750	2007-2012	FL/FR
Z 750 ABS	750	2007-2012	FL/FR
Z 800e	800	2013	FL/FR
Z 800e ABS	800	2013	FL/FR
KYMCO			
G DINK	125	2012	FR
PEOPLE	250	2003-2004	FR
XCITING	250	2004-2008	FL/FR
G DINK	300	2012-2013	FR
SUPER DINK	300	2009-2012	FR
XCITING	400	2012-2013	R
XCITING	500	2004-2009	FL/FR
XCITING	500	2004-2009	R
XCITING R	500	2007-2011	FL/FR
XCITING R	500	2007-2011	R

MODELLO MODEL	CC	ANNO YEAR	POSIZIONE POSITION
MYROAD	700	2011	FL/FR
MYROAD	700	2011	R
PEUGEOT			
SATELIS	400	2008-2011	FL/FR
GEOPOLIS	500	2008-2012	FL
SATELIS	500	2007-2012	FL/FR
SATELIS ABS	600	2004	FL
SUZUKI			
GSF BANDIT	600	1995-1999	FL/FR
RF R	600	1993-1997	FL/FR
BURGMAN (4 fori / holes)	650	2002-2005	FL/FR
BURGMAN (5 fori / holes)	650	2004-2012	FL/FR
BURGMAN ABS	650	2004-2014	FL/FR
BURGMAN ABS	650	2004-2012	FL/FR
BURGMAN ABS EXECUTIVE	650	2013-2014	FL/FR
TRIUMPH			
STREET TRIPLE	675	2007-2014	FL/FR
BONNEVILLE	800	2001-2006	FL
TIGER	800	2010-2014	FL/FR
TIGER ABS	800	2011-2014	FL/FR
TIGER XC	800	2010-2014	FL/FR
TIGER XC ABS	800	2010-2014	FL/FR
AMERICA	865	2007-2013	FL
BONNEVILLE	865	2007-2013	FL
BONNEVILLE SE	865	2009-2011	FL
BONNEVILLE- T100	865	2005-2013	FL
SCRAMBLER	865	2006-2013	FL
SPEEDMASTER	865	2005-2011	FL/FR
SPEEDMASTER	865	2012-2013	FL
THRUXTON	865	2004-2014	FL
ADVENTURER	900	1996-2001	FL/FR
LEGEND TT	900	1998-2000	FL
TIGER	900	1999-2000	FL/FR
TIGER	900	1999-2000	R
TIGER	955	2001-2004	FL
TIGER	955	2001-2004	R
TIGER	955	2005-2006	FL/FR
YAMAHA			
WR R	125	2009-2011	FL
WR X	125	2009-2013	FL
WR X	250	2008	FL

717

SM1
- Semimetallica polivalente
- Semi-metallic pad

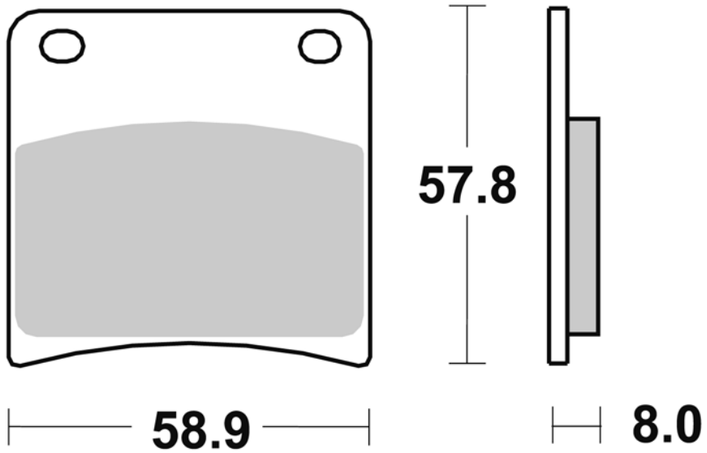

MODELLO MODEL	CC	ANNO YEAR	POSIZIONE POSITION
SUZUKI			
GSX F	600	1988-1997	FL/FR
GSX	750	1989-1992	FL/FR
VX	800	1990-1994	R
GSX F	1100	1988-1993	FL/FR
GSX G	1100	1991-1995	R

719

CM56
- Sinterizzata stradale post. uso sportivo
- Rear sintered pad

SM1
- Semimetallica polivalente
- Semi-metallic pad

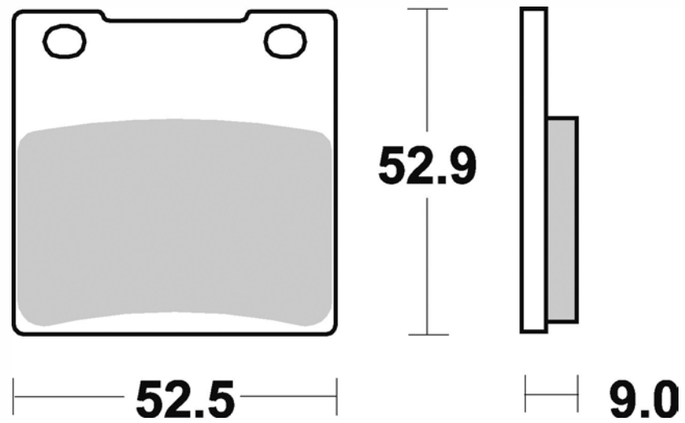

MODELLO MODEL	CC	ANNO YEAR	POSIZIONE POSITION
HYOSUNG			
COMET GT	250	2002	R
KAWASAKI			
ZXR	400	1989-2002	R
ZZR	500	1990	R
ZX7R NINJA	750	1996-2003	R
ZXR	750	1989-1995	R
ZXR R	750	1989-1990	R
ZXR R	750	1991-1992	R
ZXR R	750	1993-1995	R
ZXR R	750	1989-1995	R
ZRX	1100	1997-2000	R
ZZR	1100	1993-1999	R
ZRX	1200	2001-2006	R
ZRX R	1200	2001-2006	R
ZRX S	1200	2001-2006	R
ZX12R NINJA	1200	2000-2003	R
ZX12R NINJA	1200	2004-2005	R
ZX12R NINJA	1200	2006	R
ZZR	1200	2002-2005	R
SUZUKI			
GF S	250	1988	R
GSF BANDIT	250	1990	R
GSX R	250	1988	R
GSX RR	250	1989	R
RG GAMMA	250	1986-1988	R
RGV GAMMA	250	1989-1990	R
GOOSE	350	1992	R
GSF BANDIT	400	1993-1996	R
GSX F	400	1986-1987	R

MODELLO MODEL	CC	ANNO YEAR	POSIZIONE POSITION
GSX F	400	1986-1987	FL/FR
GSX KATANA	400	1992	R
GSX R	400	1987-1989	R
RG GAMMA	400	1985-1988	FL/FR
GS E	500	1989-2005	R
GS F	500	2004-2007	R
RG GAMMA	500	1985-1989	R
GSX	550	1983-1987	R
GSX	550	1983-1987	FL/FR
GSF BANDIT	600	1995-2004	R
GSX F	600	1988-2006	R
GSX R	600	1997-2003	R
RF R	600	1993-1997	R
SV	650	1999-2002	R
SV S	650	1999-2002	R
GSX	750	1987-1992	R
GSX	750	1997-2003	R
GSX F	750	1998-2006	R
GSX R	750	1989-2003	R
GSX SE	750	1984-1985	R
GSX SE	750	1984-1985	FL/FR
RF	900	1994-1997	FL/FR
TL R	1000	1998-2003	R
TL S	1000	1997-2001	R
GSX F	1100	1986-1987	R
GSX F	1100	1986-1987	FL/FR
GSX R	1100	1989-2000	R
GSF BANDIT	1200	1996-2005	R
GSX	1200	1999-2003	R
GSX R HAYABUSA	1300	1999-2007	R

Le immagini hanno il solo scopo di presentare i prodotti.
The images used are aimed at presenting the products only.

FL > pastiglia anteriore sinistra / front left pad
FR > pastiglia anteriore destra / front right pad
R > pastiglia posteriore / rear pad

720

CM55
- Sinterizzata stradale ant. uso sportivo
- Front sintered pad

CM56
- Sinterizzata stradale post. uso sportivo
- Rear sintered pad

SM1
- Semimetallica polivalente
- Semi-metallic pad

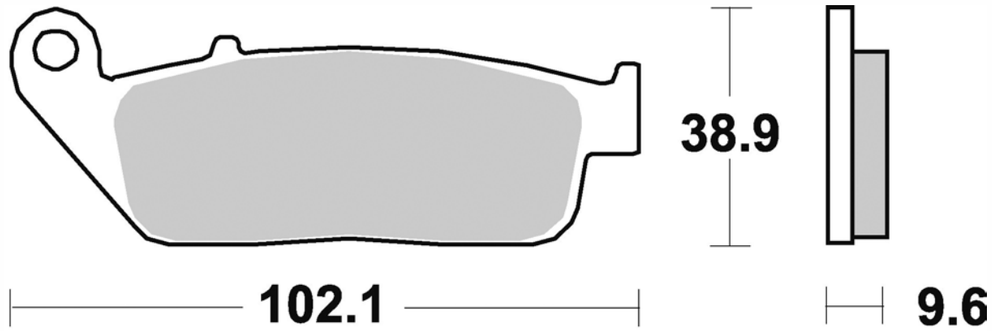

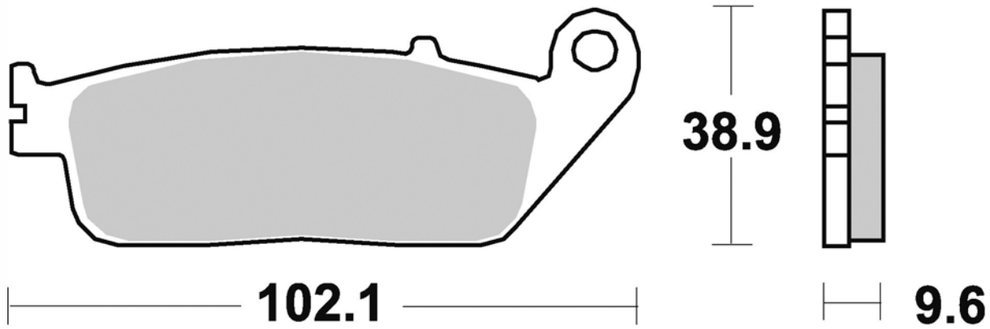

MODELLO MODEL	CC	ANNO YEAR	POSIZIONE POSITION
DAELIM			
DAYSTAR (Rear Drum Model)	125	2000-2011	FL
EVOLUTION	125	2001-2004	FL
MAGNA	125	1997	FL
ROADWIN	125	2004-2012	FL
ROCKET	125	1999	FL
HONDA			
SH i	125	2014	FL
SH i	150	2014	FL
SW-T	400	2009-2014	R
SW-T ABS	400	2009-2014	R
CB F	500	2013-2014	FR
CB X	500	2013-2014	FR
CBF	500	2004-2008	FR
CBR R	500	2013-2014	FR
SW-T ABS	600	2011-2014	R
CB F	650	2014	FL/FR
CBR F	650	2014	FL/FR
DN-01	680	2008-2012	R
CTX DCT ABS	700	2014	FR
CTX N DCT ABS	700	2014	FR
NC S DCT	750	2014	FR
NC X	750	2014	FR
NC X DCT	750	2014	FR
VFR F	750	1988-1989	R
VFR F	750	1990-1997	R
VT BLACK WIDOW (Rear Drum Model)	750	2001-2005	FL
VT S (Rear Drum Model)	750	2011-2013	FL
VT SHADOW (Rear Drum Model)	750	1997-2009	FL
CBR F	1000	1989-1992	R
ST PAN EUROPEAN	1100	1990	R
VT SHADOW	1100	1992-1995	FL/FR
CTX ABS	1300	2014	R

MODELLO MODEL	CC	ANNO YEAR	POSIZIONE POSITION
VT CX	1300	2010-2012	FL
GL F6C VALKYRIE	1500	1997-2003	R
KYMCO			
DOWNTOWN i	125	2009-2014	FR
K-XCT	125	2012-2014	FR
SUPER DINK	125	2009-2013	FR
DOWNTOWN i	200	2010-2014	FR
VENOX (Rear Drum Model)	250	2000-2014	FL
DOWNTOWN i	300	2009-2014	FR
DOWNTOWN i ABS	300	2010-2014	FR
XCITING R	300	2009-2011	FL/FR
XCITING Ri	300	2008-2014	FL/FR
MBK			
CITYLINER	125	2008-2010	FL
SUZUKI			
INAZUMA	250	2012-2014	FL
VL INTRUDER CT	1500	2013-2014	FL
SYM			
CEVALO	125	2010	FL
TRIUMPH			
SPEEDMASTER	800	2003-2004	FL/FR
ADVENTURER	900	1996-2001	R
LEGEND TT	900	1998-2000	R
THUNDERBIRD	900	1995-2003	FL
THUNDERBIRD	900	1995-2003	R
THUNDERBIRD SPORT	900	1996-2004	R
THUNDERBIRD SPORT	900	1996-2004	FL/FR
YAMAHA			
X-CITY	125	2008-2013	FL
X-MAX YP R	125	2010-2013	FR
X-MAX YP R ABS	125	2011-2014	FR
X-MAX YP R SPORT	250	2011-2012	FR
XC	300	2004-2006	FR

722

CM44
- Sinterizzata off-road
- Offroad sintered pad

SM1
- Semimetallica polivalente
- Semi-metallic pad

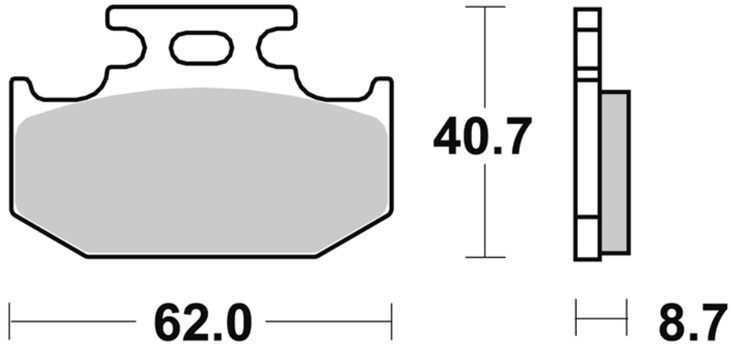

MODELLO MODEL	CC	ANNO YEAR	POSIZIONE POSITION
KAWASAKI			
KDX	125	1990-2006	R
KX	125	1989-1994	R
KDX	200	1989-2006	R
KDX	200	1989-2003	R
KDX	220	1994-2005	R
KDX	250	1991-1997	R
KLX R	250	1993-1996	R
KX	250	1989-1994	R
KX	500	1989-1995	R
KLX	650	1993-1996	R
KLX R	650	1993-2003	R
KLX S	650	1993-1994	R
SUZUKI			
DR BIG	80	1991	R
RM	125	1989-1995	R
TS R	125	1989	R
TS R	200	1989	R
COBRA	250	1989	R
DR S	250	1990	R
DR Z	250	2001-2007	R
RM	250	1989-1995	R

MODELLO MODEL	CC	ANNO YEAR	POSIZIONE POSITION
RMX S	250	1992-1998	R
DR R	350	1994-1999	R
DR S	350	1989-1993	R
DR S	350	1996-1999	R
DR SE	650	1996-2009	R
YAMAHA			
DT X	125	2005-2006	R
DT X SM	125	2005	R
WR	125	1989-1997	R
YZ	125	1990-1997	R
WR R	200	1992-1995	R
SEROW	250	2005-2006	R
TRICKER	250	2005-2006	R
TT R	250	1993	R
WR	250	1990-1997	R
XT X	250	2005-2006	R
YZ	250	1990-1997	R
YZ RALLY	360	1990-1993	R
WR F	400	1998	R
YZ F	400	1998	R
WR Z	500	1992-1993	R
TT R	600	1993-1995	R

Le immagini hanno il solo scopo di presentare i prodotti.
The images used are aimed at presenting the products only.

FL > pastiglia anteriore sinistra / front left pad
FR > pastiglia anteriore destra / front right pad
R > pastiglia posteriore / rear pad

725

CM44
- Sinterizzata off-road
- Offroad sintered pad

P30
- Sinterizzata scooter
- Scooter sintered pad

SM1
- Semimetallica polivalente
- Semi-metallic pad

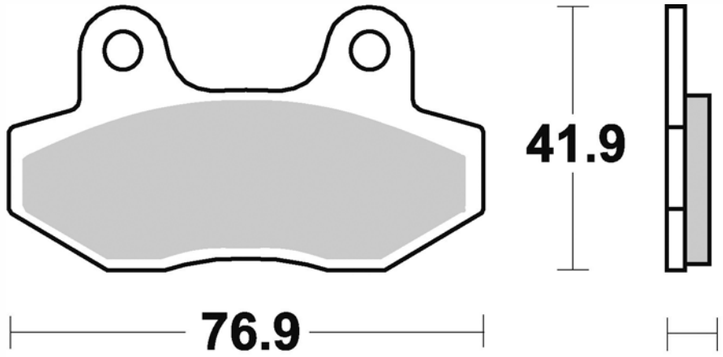

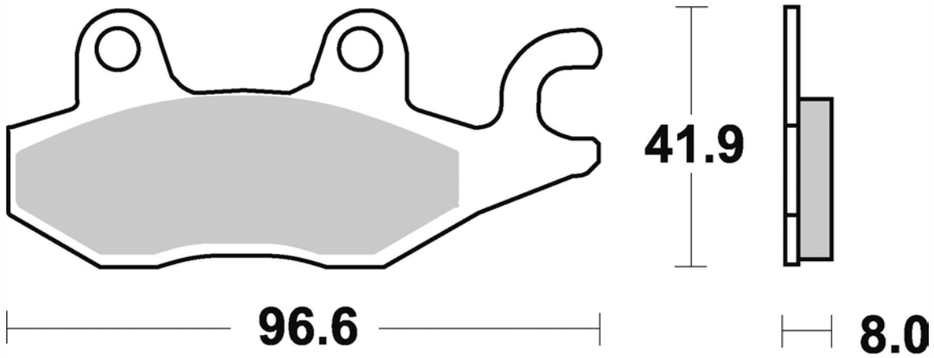

MODELLO MODEL	CC	ANNO YEAR	POSIZIONE POSITION
AEON			
CROSSLAND RX	350	2011	R
CAGIVA			
CANYON	500	1999-2000	R
CANYON	600	1995-1999	R
ELEFANT	750	1994-1995	R
ELEFANT	900	1990-1992	R
GRAN CANYON	900	1999-2004	R
NAVIGATOR	1000	2000-2005	R
HONDA			
NSR	50	1993-1999	FR
NSR MINI	50	2000-2004	FR
XR SUPERMOTARD	50	2005	FR
NSR	100	1993-1999	FR
VT C SHADOW (Rear Drum Model)	125	1999-2008	FL
XLV VARADERO	125	2001-2011	FL
CBF (Rear Drum Model)	250	2004-2008	FL
KAWASAKI			
ELIMINATOR	125	2000-2007	FR
NINJA 250 R	250	2008-2012	FR
NINJA 250 R	250	2008-2012	R
KLF BAJOU 4X4	300	1989	FR
KLF BAJOU 4X4	300	1989-1990	FR
NINJA 300	300	2013-2014	FR
NINJA 300	300	2013-2014	R
NINJA 300 ABS	300	2013-2014	FR
NINJA 300 ABS	300	2013-2014	R
KLF BAJOU	400	1993-1999	FR
KVF 4x4i	750	2005	FR
KVF 4x4i	750	2005-2006	FR
KYMCO			
BET&WIN	50	2001-2006	FR
BET&WIN	50	2001-2006	R
DINK	50	1998-2001	FR
DINK	50	2003-2010	FR
DINK CLASSIC	50	2003	FR
DINK SPORTS	50	2002-2006	FR
GRAND DINK 50 2T	50	2004-2007	FL

MODELLO MODEL	CC	ANNO YEAR	POSIZIONE POSITION
JETIX	50	2010	R
SPACER	50	1999-2010	FL
SUPER 9 AC	50	1999-2007	FL
SUPER 9 LC	50	2002-2007	FL
YAGER	50	1998-2010	FL
COBRA RACER	100	1999-2000	FL
ACTIV	110	2004-2006	FL
ACTIV	125	2004-2006	FL
BET&WIN	125	1999-2006	FR
BET&WIN	125	1999-2006	R
CRUISER	125	1999-2000	FR
DINK	125	1996-2004	FR
DINK	125	1996-2004	R
DINK	125	2006-2014	FL
DINK	125	2006-2014	R
DINK CLASSIC	125	2002-2003	FR
DINK CLASSIC	125	2002-2003	R
DINK LX	125	1998-2000	FL
DINK LX	125	1998-2000	R
GRAND DINK	125	2001-2007	FR
GRAND DINK	125	2001-2007	R
HIPSTER (Rear Drum Model)	125	1999-2006	FL
JETIX	125	2010	R
JOYRIDE	125	2001-2002	R
K-PIPE (Rear Drum Model)	125	2012-2013	FR
LIKE	125	2010-2012	R
MILER	125	2001-2007	FL
MILER	125	2001-2007	R
MOVIE XL	125	2001-2009	FR
PULSAR	125	2001-2005	FL
QUANNON	125	2007-2013	FR
QUANNON	125	2007-2013	R
QUANNON NAKED	125	2010-2014	FR
QUANNON NAKED	125	2010-2014	R
SECTOR	125	1998-2001	FL
SPACER	125	1999-2004	FL
SPACER	125	1999-2004	R
SPYKE R	125	2004-2006	FL

MODELLO MODEL	CC	ANNO YEAR	POSIZIONE POSITION
SPYKE R	125	2004-2006	R
STRAIGHT	125	2005-2006	FL
YAGER	125	2000-2001	FL
YAGER	125	2000-2001	R
ZING (Rear Drum Model)	125	1997-2002	FR
AGILITY R16	150	2008-2012	R
BET&WIN	150	2001-2006	FR
BET&WIN	150	2001-2006	R
DINK	150	1997-2004	FR
DINK	150	1997-2004	R
DINK CLASSIC	150	2002-2003	FR
DINK LX	150	1998-2000	FL
DINK LX	150	1998-2000	R
GRAND DINK	150	2001-2007	FL
GRAND DINK	150	2001-2007	R
HIPSTER (Rear Drum Model)	150	1999-2006	FL
JETIX	150	2010	R
JOYRIDE	150	2001	R
MILER	150	2001-2007	FL
MILER	150	2001-2007	R
MOVIE XL	150	2001-2009	FR
SPACER	150	1999-2004	FR
SPACER	150	1999-2004	R
YAGER	150	2001	FR
YAGER	150	2001	R
ZING (Rear Drum Model)	150	1997-2002	FR
AGILITY R16	200	2009-2014	R
AGILITY R16i PLUS	200	2014	R
DINK	200	2006-2014	FR
DINK	200	2006-2014	R
DINK CLASSIC	200	2004-2005	FR
DINK CLASSIC	200	2004-2005	R
LIKE	200	2009-2014	R
BET&WIN	250	2000-2006	FR
BET&WIN	250	2000-2006	R
PEOPLE	250	2003-2006	R
PEOPLE	250	2005-2006	FR
PEOPLE S	250	2006-2009	FL
XCITING	250	2005-2008	R
YUP	250	2003-2006	FR
YUP	250	2003-2006	R
G DINK	300	2012-2013	R
PEOPLE S	300	2008-2010	FL
MZ			
SM	125	1999-2002	R
SX	125	1999-2002	R
SUZUKI			
BURGMAN	125	2014	FR
BURGMAN ABS	125	2014	FR
BURGMAN	200	2014	FR

MODELLO MODEL	CC	ANNO YEAR	POSIZIONE POSITION
BURGMAN ABS	200	2014	FR
LT F KING QUAD	300	2002	FR
BURGMAN ABS	400	2011-2013	FR
BURGMAN twin disk	400	2006-2012	FR
LT R QUADRACER	450	2006-2010	FR
LT A QUADMASTER	500	2000-2001	FR
LT F QUADRUNNER	500	1998-2002	FR
DR BIG S	800	1991-1996	R
SYM			
XS	125	2007-2010	FL
TGB			
BUFFALO	150	2003	R
TRIUMPH			
DAYTONA	750	1991-1993	R
TRIDENT	750	1991-1996	FR
TRIDENT	750	1991-1996	R
DAYTONA	900	1994-1996	R
DAYTONA SUPER III	900	1994-1996	R
SPEED TRIPLE T309	900	1994-1997	R
SPRINT	900	1994-1998	R
TIGER	900	1993-1998	FR
TIGER	900	1993-1998	R
TRIDENT	900	1991-1996	FR
TRIDENT	900	1991-1996	R
TROPHY	900	1991-1995	FR
TROPHY	900	1991-2000	R
SPRINT RS	955	2000-2004	R
TIGER	955	2005-2006	R
DAYTONA	1000	1991-1995	R
SPRINT GT ABS	1050	2010-2014	R
TIGER	1050	2007-2011	R
TIGER ABS	1050	2007-2013	R
DAYTONA	1200	1991-1997	R
TROPHY	1200	1991-1995	FR
TROPHY	1200	1991-2003	R
VOXAN			
SCRAMBLER	995	2002-2006	R
YAMAHA			
TZM R	50	1994	FR
TZR R	50	1993-2002	FR
YBR	250	2007-2011	FR
YFZ R	450	2011-2014	FL
YFZ S	450	2004-2009	FR
YXR RHINO	450	2006-2008	FR
YXR RHINO	660	2004-2007	FR
YFM RN RAPTOR	700	2006-2009	FR
YXR RHINO	700	2008-2012	FR
XTZ SUPER TENERE	750	1989-2000	FR
XTZ SUPER TENERE	750	1989-2000	R

Le immagini hanno il solo scopo di presentare i prodotti.
The images used are aimed at presenting the products only.

FL > pastiglia anteriore sinistra / front left pad
FR > pastiglia anteriore destra / front right pad
R > pastiglia posteriore / rear pad

726

SM1
- Semimetallica polivalente
- Semi-metallic pad

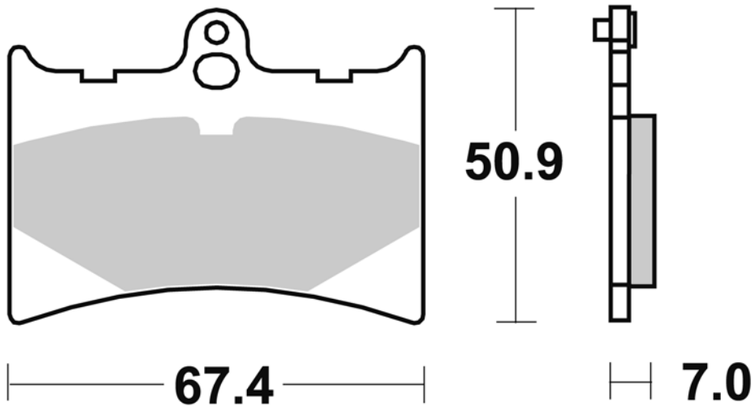

MODELLO MODEL	CC	ANNO YEAR	POSIZIONE POSITION
APRILIA			
AF1 FUTURA	125	1990-1992	**FR**
AF1 REPLICA	125	1988-1989	**FR**
AF1 SINTESI	125	1988-1990	**FR**
EUROPA	125	1990-1992	**FR**
RS	125	1998-2005	**FR**
RS Extrema	125	1992-1997	**FR**
RS R PISTA	125	2004	**FR**
RS REPLICA	125	1992-1997	**FR**
SPORT PRO	125	1992-1994	**FR**
TUONO	125	2003-2007	**FR**
ATK			
604 QUADRACER	604	1990	**FL/FR**
BENELLI			
BX	125	1989-1994	**FL**
JARNO	125	1989-1994	**FL/FR**
GILERA			
CRONO	125	1991-1994	**FL**
CX	125	1991-1994	**FL**

MODELLO MODEL	CC	ANNO YEAR	POSIZIONE POSITION
FREE STYLE	125	1991-1993	**FL**
GFR	125	1993-1994	**FL**
MX1	125	1988-1990	**FL**
MXR	125	1989-1992	**FL**
SP 01	125	1989	**FL**
SP 02	125	1990-1991	**FL**
NORDWEST	600	1991-1993	**FL**
KTM			
GS	125	1987	**FL**
GS	125	1987	**R**
MX	125	1987	**FL**
MX	125	1987	**R**
GS	250	1987	**FL**
GS	250	1987	**R**
MX	250	1987	**FL**
MX	250	1987	**R**
MX	500	1987	**FL**
MX	500	1987	**R**

728

SM1
- Semimetallica polivalente
- Semi-metallic pad

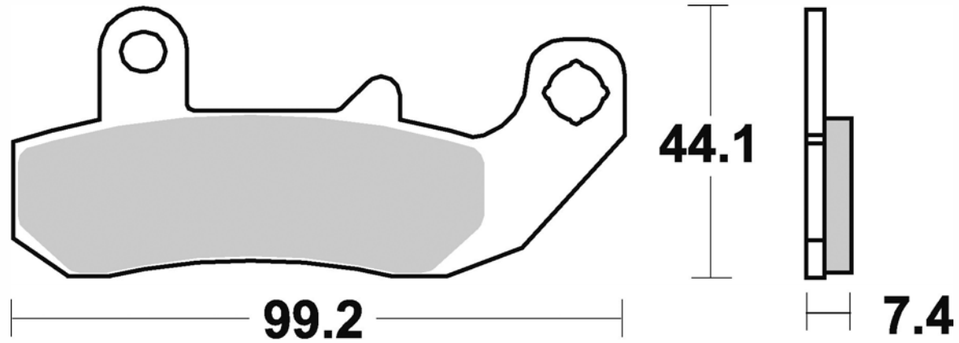

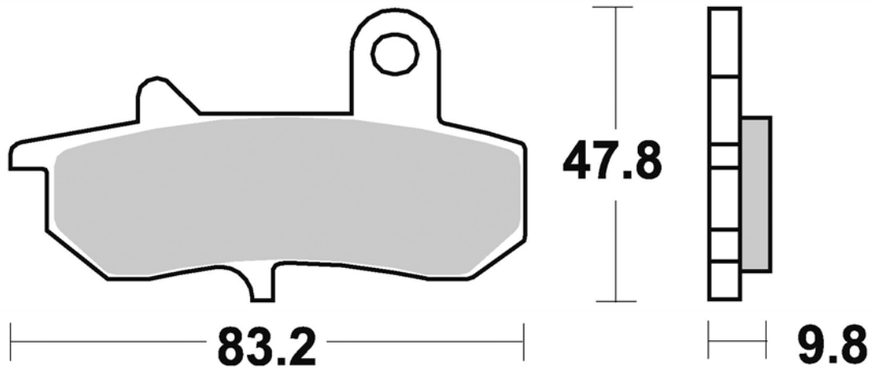

MODELLO MODEL	CC	ANNO YEAR	POSIZIONE POSITION
SUZUKI			
RG F GAMMA	125	1992	**R**
DR DJEBEL	600	1989	**R**
DR	650	1991-1995	**R**
DR DJEBEL	650	1990-1995	**R**
DR R	650	1990-1993	**R**
DR RE	650	1994-1995	**R**

MODELLO MODEL	CC	ANNO YEAR	POSIZIONE POSITION
DR RS	650	1990-1991	**R**
DR RSE	650	1991-1993	**R**
DR BIG	750	1988-1989	**R**
DR BIG S	800	1989-1990	**R**
YAMAHA			
DTZ TENERE	125	1989-1994	**R**

729

SM1
- Semimetallica polivalente
- Semi-metallic pad

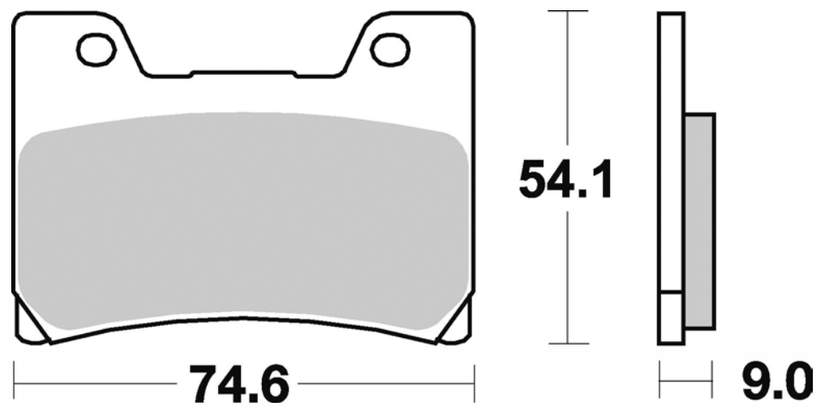

MODELLO MODEL	CC	ANNO YEAR	POSIZIONE POSITION
YAMAHA			
FZR R	600	1990-1991	**FL/FR**
TDM	850	1996-2001	**FL/FR**

MODELLO MODEL	CC	ANNO YEAR	POSIZIONE POSITION
FZR EXUP	1000	1990-1991	**FL/FR**
V MAX	1200	1993-2006	**FL/FR**

Le immagini hanno il solo scopo di presentare i prodotti.
The images used are aimed at presenting the products only.

FL > pastiglia anteriore sinistra / front left pad
FR > pastiglia anteriore destra / front right pad
R > pastiglia posteriore / rear pad

732

CM77
- Sinterizzata anteriore Harley Davidson
- Front cruiser sintered pad

SM1
- Semimetallica polivalente
- Semi-metallic pad

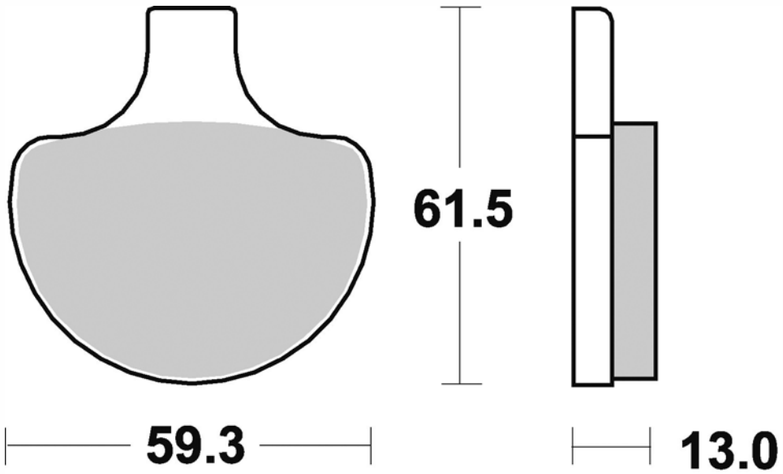

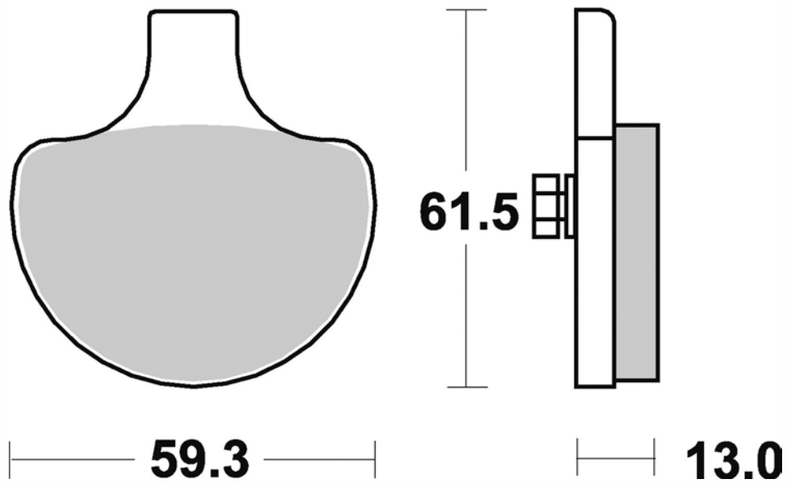

MODELLO MODEL	CC	ANNO YEAR	POSIZIONE POSITION
HARLEY D.			
XLH 883 SPORTSTER	883	1985-1999	FL
XLH 1200 SPORTSTER	1200	1987-1999	FL
FLH 1340 83	1340	1989-1999	FL
FLSTC 1340 HERITAGE SOFTAIL CLASSIC	1340	1989-2002	FL
FLSTC FAT BOY	1340	1989-2002	FL
FLSTC HERITAGE SOFTAIL CLASSIC	1340	1989-1999	FL
FLSTF FAT BOY	1340	1989-1999	FL
FXDWG DYNA WIDE GLIDE	1340	1993-1998	FL
FXLR 1340 LOW RIDER CUSTOM	1340	1987-1999	FL
FXR 1340 SUPER GLIDE	1340	1982-1999	FL
FXRS 1340 LOW RIDER SPORT	1340	1987-1999	FL
FXRT 1340 SPORT GLIDE	1340	1987-1999	FL/FR

MODELLO MODEL	CC	ANNO YEAR	POSIZIONE POSITION
FXRT 1340 SPORT GLIDE	1340	1987-1999	FL
FXSTC SOFTAIL CUSTOM	1340	1989-1999	FL
FXSTS 1340 SPRINGER SOFTAIL	1340	1989-1999	FL
FLHR/I ROAD KING	1450	1998-1999	FL/FR
FLHT/I ELECTRA GLIDE STANDARD	1450	1998-1999	FL/FR
FLSTC HERITAGE SOFTAIL CLASSIC	1450	2000-2006	FL
FLSTS HERITAGE SPRINGER	1450	2000-2003	FL
FLTR/I ROAD GLIDE	1450	1998-1999	FL/FR
FXDWG DYNA WIDE GLIDE	1450	1993-1999	FL
FXRS SPORT GLIDE	1450	1984-1986	FL
FXSTS/I SPRINGER SOFTAIL	1450	2000-2006	FL
FLSTB SOFTAIL CROSS BONES	1584	2008-2011	FL

734

SM1
- Semimetallica polivalente
- Semi-metallic pad

CM88
- Sinterizzata posteriore Harley Davidson
- Rear cruiser sintered pad

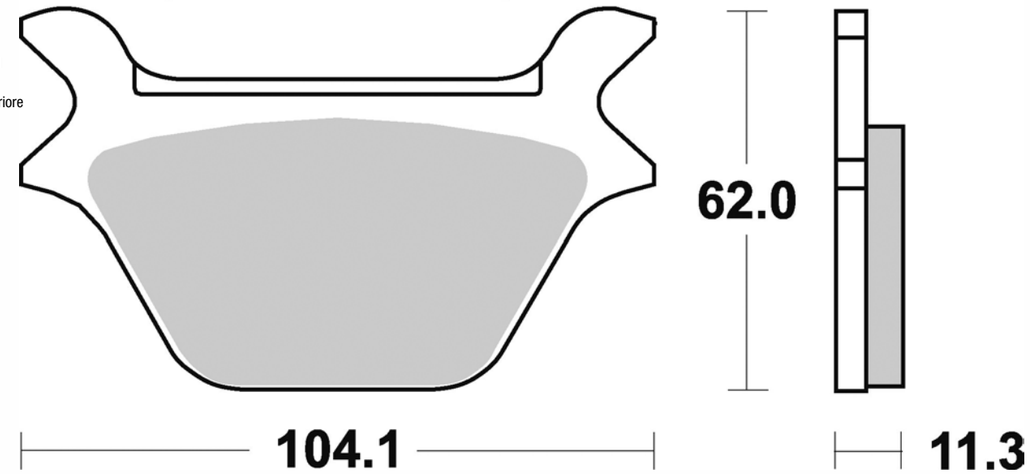

MODELLO MODEL	CC	ANNO YEAR	POSIZIONE POSITION
HARLEY D.			
XLH 883 SPORTSTER	883	1985-1999	R
XLH 1200 SPORTSTER	1200	1987-1999	R
FLH 1340 83	1340	1989-1999	R
FLSTC 1340 HERITAGE SOFTAIL CLASSIC	1340	1989-2002	R
FLSTC FAT BOY	1340	1989-2002	R
FLSTC HERITAGE SOFTAIL CLASSIC	1340	1989-1999	R
FLSTF FAT BOY	1340	1989-1999	R
FXLR 1340 LOW RIDER CUSTOM	1340	1987-1999	R
FXRS 1340 LOW RIDER SPORT	1340	1987-1999	R

MODELLO MODEL	CC	ANNO YEAR	POSIZIONE POSITION
FXRT 1340 SPORT GLIDE	1340	1987-1999	R
FXSTC SOFTAIL CUSTOM	1340	1989-1999	R
FXSTS 1340 SPRINGER SOFTAIL	1340	1989-1999	R
FLHR/I ROAD KING	1450	1998-1999	R
FLHT/I ELECTRA GLIDE STANDARD	1450	1998-1999	R
FLSTC HERITAGE SOFTAIL CLASSIC	1450	2000-2006	R
FLTR/I ROAD GLIDE	1450	1998-1999	R
FXDWG DYNA WIDE GLIDE	1450	1993-1999	R
FXRS SPORT GLIDE	1450	1984-1986	R

735

SM1
- Semimetallica polivalente
- Semi-metallic pad

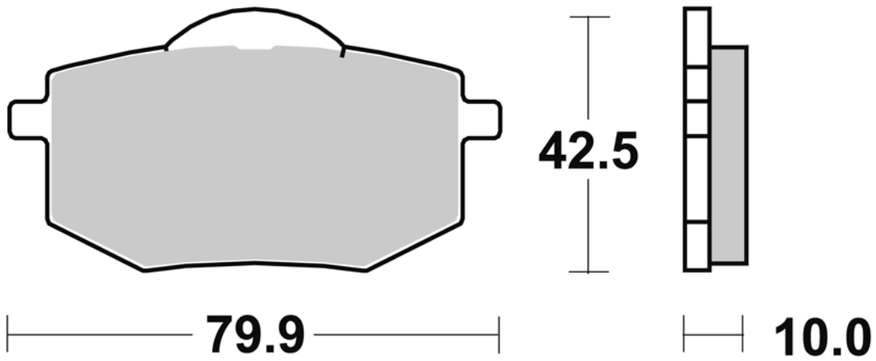

MODELLO MODEL	CC	ANNO YEAR	POSIZIONE POSITION
YAMAHA			
XV VIRAGO	250	1989-1994	FL
XV VIRAGO	400	1988	FL
XV VIRAGO (Rear Drum Model)	535	1989-1995	FL

MODELLO MODEL	CC	ANNO YEAR	POSIZIONE POSITION

Le immagini hanno il solo scopo di presentare i prodotti.
The images used are aimed at presenting the products only.

FL > pastiglia anteriore sinistra / front left pad
FR > pastiglia anteriore destra / front right pad
R > pastiglia posteriore / rear pad

737

SM1
- Semimetallica polivalente
- Semi-metallic pad

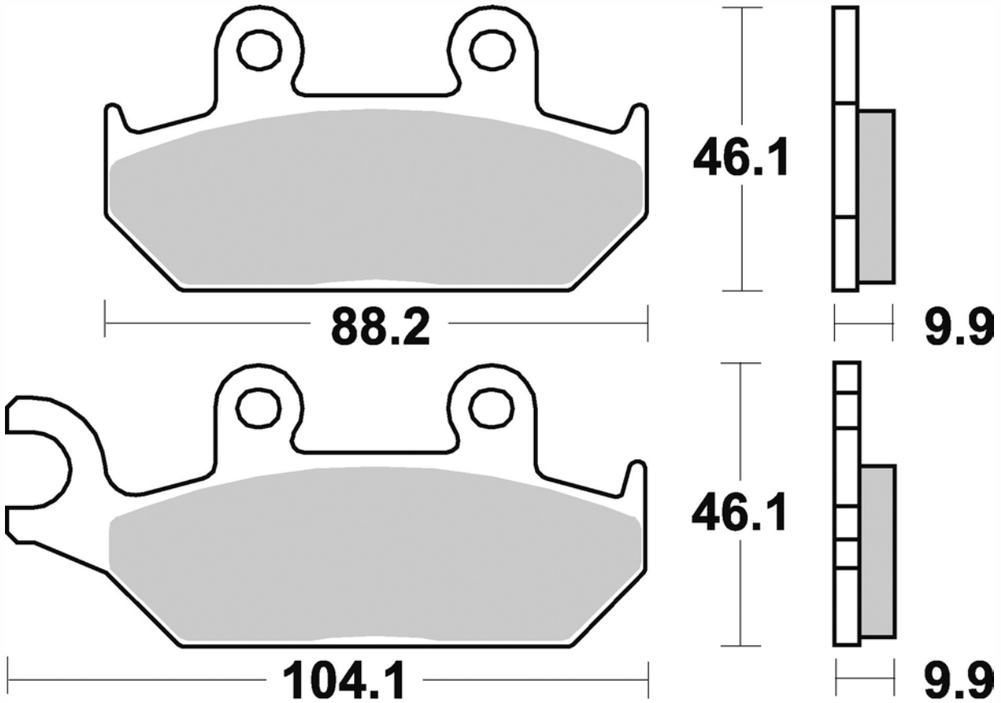

MODELLO MODEL	CC	ANNO YEAR	POSIZIONE POSITION
YAMAHA			
XT E	600	1990-2003	**FL**
XTZ TENERE	660	1991-1998	**FR**

MODELLO MODEL	CC	ANNO YEAR	POSIZIONE POSITION

739

SM1
- Semimetallica polivalente
- Semi-metallic pad

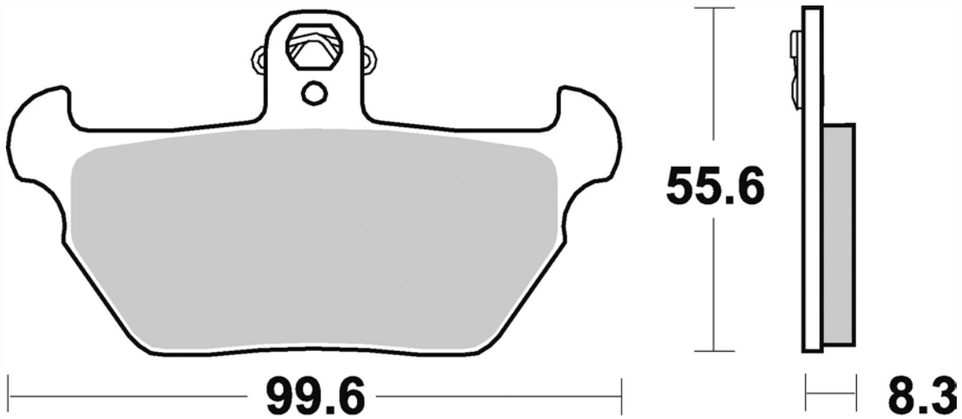

MODELLO MODEL	CC	ANNO YEAR	POSIZIONE POSITION
BMW			
R 80 R	800	1991	**FL/FR**
R 80 R ROADSTER	800	1992-1993	**FL/FR**
K 100 LT	1000	1992	**FL/FR**
K 100 RS 16V	1000	1989-1993	**FL/FR**

MODELLO MODEL	CC	ANNO YEAR	POSIZIONE POSITION
K1	1000	1989-1993	**FL/FR**
R 100 R	1000	1992-1996	**FL/FR**
R 100 R ROADSTER	1000	1992-1995	**FR**
K 1100 LT	1100	1992-2000	**FL/FR**
K 1100 RS	1100	1993-1996	**FL/FR**
R 1100 RS	1100	1993	**FL/FR**

741

SM1
- Semimetallica polivalente
- Semi-metallic pad

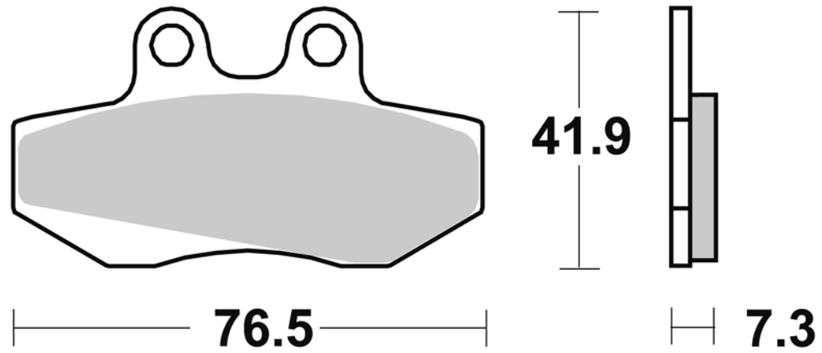

MODELLO MODEL	CC	ANNO YEAR	POSIZIONE POSITION
APRILIA			
RX	50	1991-1994	**FL**
PEGASO	125	1990-1991	**FR**
TUAREG RALLY	125	1991-1994	**FR**
TUAREG WIND	125	1990-1991	**FR**
BETA			
RK-6	50	1994-1997	**FL**
RR ENDURO	50	1999-2007	**FL**
RR SUPERMOTARD	50	1999-2003	**FL**
BULTACO			
LOBITO	50	1999-2006	**FL**
DERBI			
GPR R	50	1998-2000	**FL**
GPR REPLICA RACING	50	2002-2003	**FL**
SENDA DRD R	50	2003-2004	**FL**
SENDA DRD SM	50	2003-2004	**FL**
ATMOSPHERE	125	1999	**FL**
PREDATOR	180	1999	**FL**
FANTIC M.			
RC CABALLERO	50	1994-1995	**FL**
CABALLERO	125	1997-2000	**FL**

MODELLO MODEL	CC	ANNO YEAR	POSIZIONE POSITION
GAS GAS			
EC ROOKIE	50	2001	**FL**
SM ROOKIE	50	2001	**FL**
GILERA			
RUNNER FX	125	1997-1999	**FL**
RUNNER FXR 2t	180	1997	**FL**
KTM			
EXC	50	1999	**FL**
PEUGEOT			
XR6 RACE SPEC	50	2002	**FL**
XR6 STREET	50	2005	**FL**
RIEJU			
MRX PRO	50	2005	**FL**
RACING SPEC EDITION	50	2001	**FL**
RS1	50	2001-2004	**FL**
SPIKE RACING	50	2002	**FL**
MRX PRO	125	2002-2006	**FL**
SMX	125	2002-2008	**FL**
YAMAHA			
XC CYGNUS X	125	2005-2006	**FR**

Le immagini hanno il solo scopo di presentare i prodotti.
The images used are aimed at presenting the products only.

FL > pastiglia anteriore sinistra / front left pad
FR > pastiglia anteriore destra / front right pad
R > pastiglia posteriore / rear pad

742

CM56
- Sinterizzata stradale post. uso sportivo
- Rear sintered pad

SM1
- Semimetallica polivalente
- Semi-metallic pad

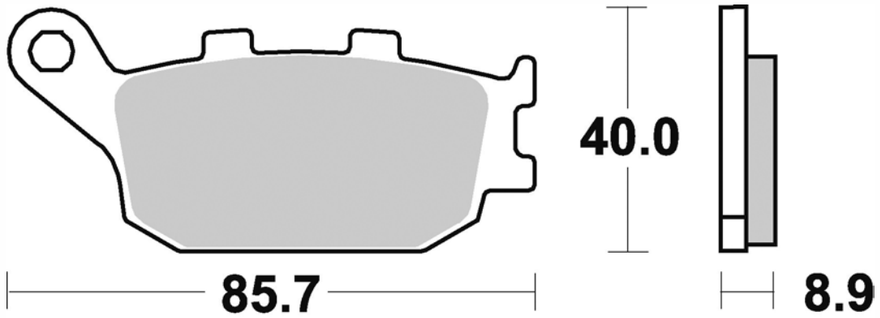

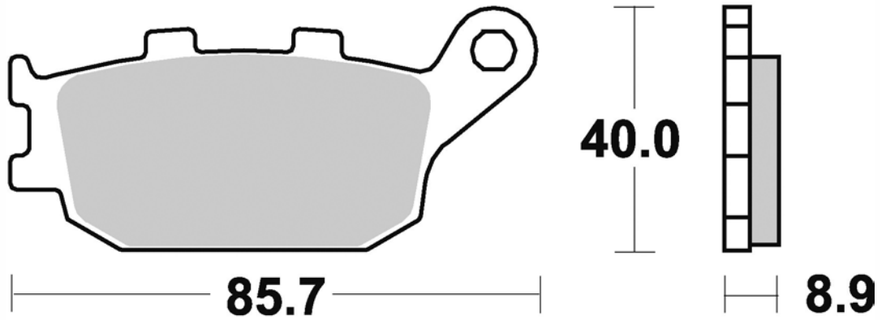

MODELLO MODEL	CC	ANNO YEAR	POSIZIONE POSITION
HONDA			
FORZA	250	2000-2004	R
JAZZ	250	2001-2004	R
CB FOUR	400	1997	R
CBF	500	2004-2008	R
CBF ABS	500	2004-2007	R
CB F HORNET	600	1998-2006	R
CB F HORNET ABS	600	2007-2013	R
CB F HORNET S	600	2000-2004	R
CB F HORNET S	600	2000-2003	R
CB F HORNET S	600	2004	R
CBF	600	2004-2007	R
CBF N	600	2003-2007	R
CBF S	600	2008-2011	R
CBF S ABS	600	2003-2011	R
CBR F	600	1991-2007	R
CBR F ABS	600	2011-2013	R
CBR F SPORT	600	2001-2002	R
CBR RR	600	2003-2006	R
FMX	650	2005-2008	R
INTEGRA	700	2012-2013	R
NC S ABS	700	2012-2013	R
NC X ABS	700	2012-2013	R
CB F	750	1992-1995	R
CB N	750	1992-1995	R
CB Seven Fifty	750	1992-1995	R
NC S DCT	750	2014	R
NC X	750	2014	R
NC X DCT	750	2014	R
CB F HORNET	900	2002-2006	R
CBR RR	900	1992-1999	R
CBR RR	929	2000-2001	R
CBR RR	954	2002-2003	R
CB F Big one	1000	1993-1995	R
CB F Big one	1000	1993-1995	R
CBF	1000	2006-2011	R

MODELLO MODEL	CC	ANNO YEAR	POSIZIONE POSITION
CBR RR	1000	2004-2005	R
CBR RR	1000	2004-2005	R
VTR F FIRESTORM	1000	1997-2007	R
VTR F SUPER HAWK	1000	1997-2007	R
VTR SP1 RC51	1000	2000-2001	R
VTR SP2 RC51	1000	2002-2004	R
CB	1100	2013	R
CB ABS	1100	2014	R
CB EX ABS	1100	2014	R
VT SHADOW ACE-AERO-C2-C3	1100	1995-1998	R
VT SHADOW ACE-AERO-C2-C3	1100	1995-1998	R
CB	1284	2003-2008	R
VT CX	1300	2010-2012	R
VT CX ABS	1300	2010-2011	R
KAWASAKI			
Z 750	750	2007-2012	R
Z 750 ABS	750	2007-2012	R
KLV	1000	2004-2007	R
KLV	1000	2004-2007	R
VERSYS	1000	2012-2014	R
Z 1000	1000	2007-2009	R
Z 1000 - ABS	1000	2007-2009	R
Z 1000 - ABS	1000	2007-2009	R
SUZUKI			
DL V-STROM	650	2004-2012	R
DL V-STROM ABS	650	2007-2014	R
GSF BANDIT	650	2006-2012	R
GSF BANDIT ABS	650	2011-2014	R
GSX F	650	2008-2012	R
GSX F ABS	650	2008-2014	R
SV	650	2003-2010	R
SV ABS	650	2007-2010	R
SV S	650	2003-2009	R
SV S ABS	650	2007-2009	R
GSR	750	2011-2014	R
GSR ABS	750	2011-2014	R

MODELLO MODEL	CC	ANNO YEAR	POSIZIONE POSITION
DL V-STROM	1000	2002-2010	R
SV	1000	2003-2007	R
SV S	1000	2003-2007	R
GSF BANDIT	1200	2006	R
GSF BANDIT	1250	2007-2011	R
GSF BANDIT S	1250	2011-2012	R
GSX FA	1250	2010-2014	R
TRIUMPH			
BABY SPEED	600	2001-2002	R
TT	600	2000-2003	R
YAMAHA			
FZ6	600	2004-2008	R
FZ6 Fazer	600	2004-2008	R
FZ6 FAZER S2	600	2007-2008	R
FZ6 S2	600	2007-2008	R

MODELLO MODEL	CC	ANNO YEAR	POSIZIONE POSITION
FZ6R	600	2009	R
XJ6	600	2009-2011	R
XJ6 DIVERSION	600	2009-2011	R
YZF R6	600	2003-2014	R
MT-07	700	2014	R
FAZER 8	800	2010-2012	R
FZ8	800	2010-2013	R
MT-09	850	2014	R
MT-09 ABS	850	2014	R
MT-09 STREET RALLY	850	2014	R
FZ1	1000	2006-2014	R
FZ1 FAZER	1000	2006-2012	R
FZ1 FAZER ABS	1000	2007-2012	R
YZF R1	1000	2004-2014	R
YZF R1 SP	1000	2006	R

743

SM1
- Semimetallica polivalente
- Semi-metallic pad

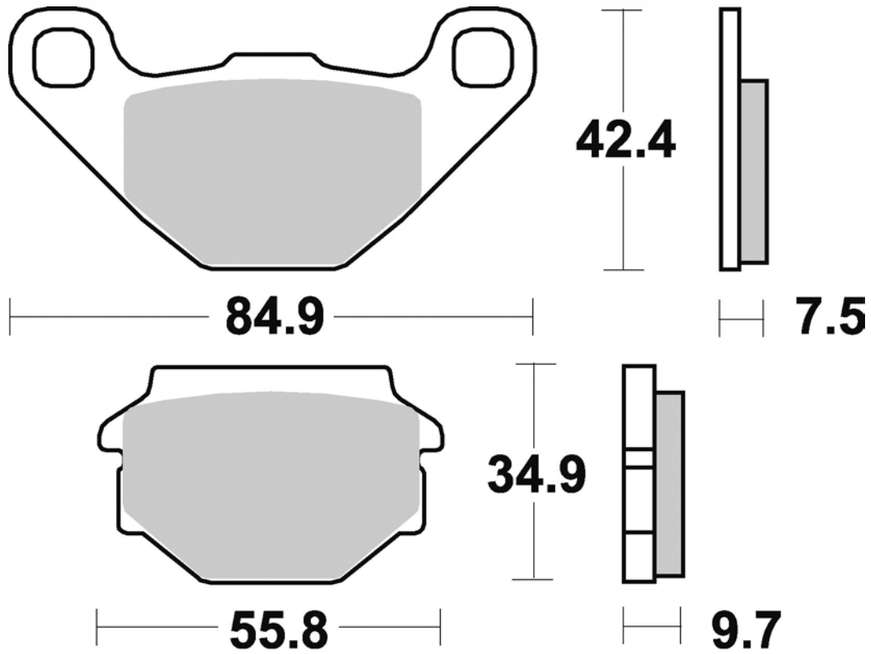

MODELLO MODEL	CC	ANNO YEAR	POSIZIONE POSITION
AGRATI G.			
BIG-WHEELS	50	1991-1994	R
APRILIA			
ETX	125	1989	R
MX	125	2004-2007	R
PEGASO	125	1990-1991	R
RX	125	1990-2000	R
PEGASO	600	1989-1990	R
PEGASO	650	1991-2000	R
PEGASO I.E.	650	2001-2004	R
FANTIC M.			
BIG WHEELS	50	1991-1994	R
CABALLERO	50	1996-2000	R
CABALLERO MOTARD	50	2006-2009	R
RC CABALLERO	50	1994-1995	R
CABALLERO	125	1997-2000	R

MODELLO MODEL	CC	ANNO YEAR	POSIZIONE POSITION
CABALLERO MOTARD	125	2007-2009	R
GILERA			
EAGLET	50	1994	R
RC TOP RALLY	50	1989-1992	FL
RC TOP RALLY	50	1989-1992	R
SIOUX	50	1991-1996	FL
SIOUX	50	1991-1996	R
HONDA-HM			
CR E	50	1999-2001	R
CR E DERAPAGE	50	1999-2002	R
MZ			
BAGHIRA	660	1996	R
BLACK PANTHER	660	2000	R
MASTIFF	660	1996	R
STREET MOTO	660	2000	R

Le immagini hanno il solo scopo di presentare i prodotti.
The images used are aimed at presenting the products only.

FL > pastiglia anteriore sinistra / front left pad
FR > pastiglia anteriore destra / front right pad
R > pastiglia posteriore / rear pad

744

SM1
- Semimetallica polivalente
- Semi-metallic pad

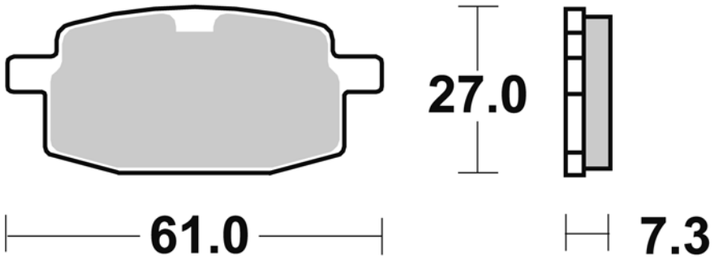

MODELLO MODEL	CC	ANNO YEAR	POSIZIONE POSITION
AGRATI G.			
BIG-WHEELS	50	1991-1994	FL
BIP-RACING	50	1994	FL
GRINTA	50	1995	FL
PONY SR	50	1992-1995	FL
QUEENIE	50	1995	FL
FANTIC M.			
BIG WHEELS	50	1991-1994	FL
GRINTA	50	1995-2000	FL
PONY SR	50	1993-2000	FL
ITALJET			
BAZOOKA 2	50	1992-1997	FL
PISTA 2	50	1992	FL

MODELLO MODEL	CC	ANNO YEAR	POSIZIONE POSITION
YANKEE	50	1994	FL
MBK			
TARGET	50	1992-1994	FL
BOOSTER	100	1999-2002	FL
PGO			
BIG MAX (Rear Drum Model)	50	1994-2006	FL
PMX	50	1997	FL
BIG MAX (Rear Drum Model)	80	1995-1996	FL
TORNADO	125	1996	FL
VILLA			
AX (Rear Drum Model)	50	1993	FL
YAMAHA			
CR TARGET	50	1991	FL
CR Z	50	1992-1995	FL

746

CM44
- Sinterizzata off-road
- Offroad sintered pad

CM46
- Sinterizzata off-road uso racing
- Offroad sintered pad racing use

CM55
- Sinterizzata stradale ant. uso sportivo
- Front sintered pad

SM1
- Semimetallica polivalente
- Semi-metallic pad

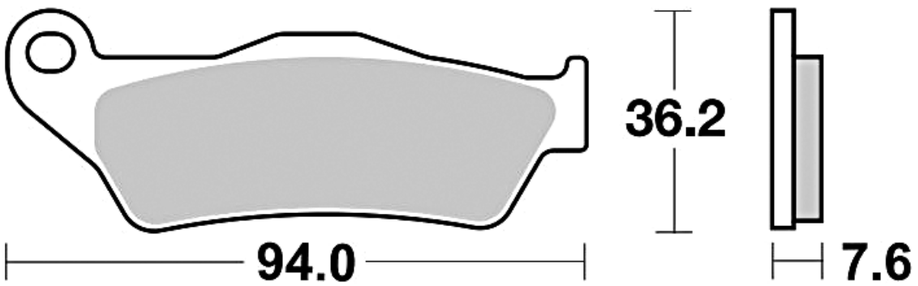

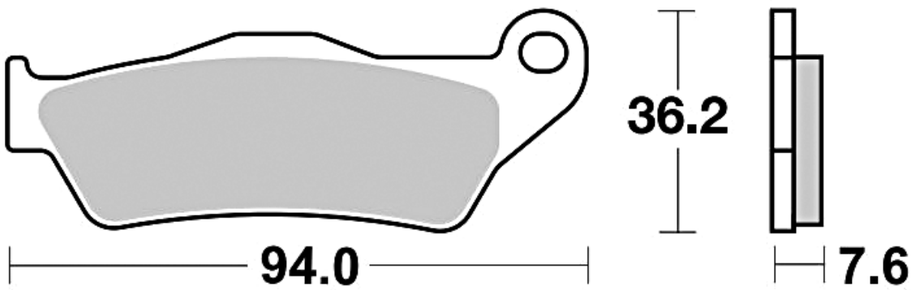

MODELLO MODEL	CC	ANNO YEAR	POSIZIONE POSITION
APRILIA			
ETX	125	1989	FL
MX	125	2004-2007	FL

MODELLO MODEL	CC	ANNO YEAR	POSIZIONE POSITION
SX	125	2008-2013	FR
SRV	850	2012-2014	FL/FR
SRV ABS ATC	850	2012-2014	FL/FR

MODELLO MODEL	CC	ANNO YEAR	POSIZIONE POSITION
RST Futura	1000	2001-2004	R
BMW			
G 450 X	450	2008-2011	FL
CAGIVA			
ELEFANT	900	1993-1996	FL/FR
ELEFANT	900	1993-1996	R
CCM			
604 RS	600	2001	FL
604E SPORT	600	1999-2001	FL
604E SUPERMOTO	600	1999-2001	FL
C25	600	1996-1998	FL
DS	644	2002-2006	FL
R30	644	2002-2006	FL
DUCATI			
MONSTER double disk	620	2005-2006	FL/FR
MULTISTRADA double disk	620	2005-2006	FL/FR
MONSTER	695	2006-2008	FL/FR
MONSTER S2R	800	2005-2006	FL/FR
FANTIC M.			
CABALLERO COMPETIZIONE	50	2006-2009	FL
CABALLERO COMPETIZIONE MINI	50	2008-2009	FL
CABALLERO REGOLARITA COMPETIZIONE	125	2007-2009	FL
GAS GAS			
WILD HP	50	2004-2005	FL/FR
WILD HP	50	2004-2005	R
EC	125	1996-1999	FL
MC	125	1996-1999	FL
WILD HP	240	2004-2005	FL/FR
WILD HP	240	2004-2005	R
EC	250	1996-1999	FL
MC	250	1996-1999	FL
EC	300	1996-1999	FL
MC	300	1996-1999	FL
WILD HP	300	2003-2006	FL/FR
WILD HP	300	2003-2006	R
WILD HP	450	2003-2005	FL/FR
WILD HP	450	2003-2005	R
GILERA			
NEXUS	500	2004-2011	FL/FR
NEXUS i.e. SP	500	2006-2008	FL/FR
GP 800	800	2008-2012	FL/FR
HIGHLAND			
MX	450	2006	FL
V2 MOTARD	950	2000	FL
V2 OUTBACK (EBE)	950	1999	FL
HONDA-HM			
CRE BAJA	50	2001-2002	FL
CRE DERAPAGE	50	2001-2002	FL
CRE SIX	50	2001-2002	FL
HRD			
GS 97	250	1997	FL
HUSABERG			
TE	125	2012-2014	FL
FE	250	2013-2014	FL
TE	250	2011-2014	FL
TE	300	2011-2014	FL
FE	350	1993-1999	FL
FE	350	2013-2014	FL
FE	390	2010-2012	FL
FE	400	1998-2003	FL
FE	400	1998-1999	FL
FE	400	2000-2003	FR
FE E	400	2001-2003	FL
FS C	400	2001-2003	FL
FS E	400	2001-2003	FL
FC	450	1993-2005	FL
FE	450	2009-2014	FL
FE E	450	2004-2008	FL
FS C	450	2003-2004	FL
FS E	450	2003-2004	FL
FX	450	2010	FL
FX E	450	2003-2005	FL
FC	470	2001-2002	FL
FX E	470	2001-2002	FL
FC	501	1999-2003	FL
FE	501	1993-1998	FL
FE	501	1993	FL
FE	501	1994-1998	FR

MODELLO MODEL	CC	ANNO YEAR	POSIZIONE POSITION
FE E	501	1999-2004	FL
FE S	501	1999-2004	FL
FE	510	2013-2014	FL
FC	550	2001-2005	FL
FE E	550	2004-2008	FL
FE	570	2010-2012	FL
FC	600	1993-2003	FL
FE E	600	1999-2002	FL
FE E	650	2001-2008	FL
FS C	650	2001-2004	FL
FS E	650	2001-2004	FL
FX E	650	2001-2005	FL
HUSQVARNA			
CR	125	2000-2012	FL
SM S	125	1995-2012	FL
SMS4	125	2010-2011	FL
TC	125	2014-2015	FL
TE	125	2010-2014	FL
WR	125	1995-2012	FL
WR E	125	1995-2012	FL
CR	250	1995-2011	FL
FC	250	2014	FL
FE	250	2014-2015	FL
TC	250	2004-2014	FL
TC	250	2004-2011	FL
TC	250	2011-2014	FL
TE	250	2004-2014	FL
TXC	250	2011	FL
WR	250	1995-2013	FL
TE	300	2014-2015	FL
WR	300	2009-2013	FL
TE	310	2009-2013	FL
TXC	310	2011	FL
FC	350	2014-2015	FL
FE	350	2014	FL
TE	350	1995-1996	FL
WR	360	2000-2004	FL
TE	410	1995-2001	FL
TC	449	2011-2013	FL
TE	449	2011-2013	FL
FC	450	2014-2015	FL
FE	450	2014-2015	FL
TC	450	2002-2010	FL
TE	450	2002-2010	FL
TXC	450	2011-2012	FL
TXC	480	2013	FL
FE	510	2014	FL
TC	510	2002-2006	FL
TC	510	2007-2009	FR
TC	510	2002-2004	FL
TC	510	2005-2006	FR
TC	510	2007-2009	FL
TC	510	2002-2009	FL
TE	510	2002-2010	FL
TE Centennial	510	2004	FL
TXC	510	2009-2010	FL
TE	511	2011-2013	FL
TXC	511	2011-2013	FL
TC	570	2000-2003	FL
TE	570	2001-2004	FL
TE 610 E	600	1998-1999	FL
TC	610	1995-2004	FL
TE	610	1995-2004	FL
TE E	610	2005-2007	FL
TE ie	610	2006-2007	FL
TE	630	2010-2012	FL
KRAMIT			
GS- MX	250	1997	FL
SM	250	1997	FL
KTM			
EXC	125	1998-2015	FL
EXC SIX DAYS	125	2009-2015	FL
EXC SIX DAYS	125	2013-2015	FL
GS	125	1993-1997	FL
MX	125	1992	FL
SX	125	1993-2015	FL
SXS	125	2000-2010	FL
SX	144	2007-2010	FL

PADS / PASTIGLIE

Le immagini hanno il solo scopo di presentare i prodotti.
The images used are aimed at presenting the products only.

FL > pastiglia anteriore sinistra / front left pad
FR > pastiglia anteriore destra / front right pad
R > pastiglia posteriore / rear pad

MODELLO MODEL	CC	ANNO YEAR	POSIZIONE POSITION
SX	150	2008-2015	FL
EXC	200	2000-2015	FL
MXC	200	1998-2003	FL
SX	200	2003-2009	FL
XC W	200	2006-2009	FL
EXC	250	1998-2014	FL
EXC E	250	2015	FL
EXC F	250	2003-2015	FL
EXC F SIX DAYS	250	2009-2015	FL
EXC G	250	2004-2009	FL
EXC SIX DAYS	250	2009-2015	FL
GS	250	1993-1997	FL
MX	250	1992	FL
MXC	250	1998-2003	FL
SX	250	1993-2015	FL
SX F	250	2003-2015	FL
SXS	250	2003-2010	FL
SXS F	250	2006-2009	FL
XC F	250	2007-2012	FL
XC W	250	2006-2012	FL
XC W	250	2006-2009	FL
EXC	300	1997-2014	FL
EXC E	300	2015	FL
EXC SIX DAYS	300	2009-2015	FL
EXC SIX DAYS	300	2013-2015	FL
GS	300	1993-1996	FL
MX	300	1992	FL
MXC	300	1998-2005	FL
SX	300	1993	FL
SX	300	1997-2003	FL
XC	300	2006-2012	FL
XC W	300	2006-2012	FL
EXC F	350	2010-2015	FL
EXC F SIX DAYS	350	2011-2015	FL
GS	350	1993	FL
SX F	350	2011-2015	FL
EXC	380	1998-2002	FL
MXC	380	1998-2001	FL
SX	380	1998-2002	FL
EGS	400	1996-1999	FL
EXC	400	1994-2011	FL
EXC G	400	2004-2006	FL
SX	400	2000-2002	FL
XC W	400	2007-2009	FL
EXC	450	2003-2015	FL
EXC R	450	2008-2009	FL
EXC SIX DAYS	450	2009-2015	FL
MXC	450	2003-2006	FL
SX F	450	2003-2015	FL
SXS	450	2003-2010	FL
SXS F	450	2003-2010	FL
XC	450	2007-2009	FL
XC F	450	2007-2009	FL
XC G	450	2006	FL
XC W	450	2007-2009	FL
EXC	500	2011-2015	FL
EXC SIX DAYS	500	2011-2015	FL
MX	500	1992	FL
SX	500	1993-1995	FL
SX F	505	2007-2009	FL
XC F	505	2007-2009	FL
EXC	520	2000-2002	FL
MXC	520	2001-2002	FL
SX	520	2000-2002	FL
EXC	525	2003-2008	FL
MXC	525	2003-2005	FL
SX	525	2003-2006	FL
XC	525	2006-2008	FL
XC G	525	2006-2008	FL
XC W	525	2006-2008	FL
EXC	530	2010-2011	FL
EXC R	530	2008-2009	FL
EXC SIX DAYS	530	2009	FL
SXC	540	1999-2000	FL
SXS	540	2001-2006	FL
GS	600	1993	FL
MX	600	1992	FL
LC4 ADVENTURE	620	1997-1998	FL

MODELLO MODEL	CC	ANNO YEAR	POSIZIONE POSITION
LC4 EGS	620	1996-2002	FL
LC4 SC SUPERCOMP	620	1998-2004	FL
LC4 SUPERMOTO	620	1999-2001	FL
LC4 SC SUPERCOMP	625	2002	FL
LC4 SUPERMOTO	625	2002-2004	FL
SXC	625	2003-2008	FL
LC4 ADVENTURE	640	1998-2003	FL
LC4 ENDURO	640	1999-2007	FL
LC4 SUPERMOTO	640	1998-2002	FL
LC8 ADVENTURE	950	2002-2006	R
LC8 ADVENTURE S	950	2004-2006	R
SUPER ENDURO R	950	2006-2008	R
SUPERMOTO	950	2005-2007	R
SUPERMOTO R	950	2006-2008	R
LC8 ADVENTURE ABS	990	2006-2012	R
LC8 ADVENTURE R	990	2010-2012	R
LC8 ADVENTURE S	990	2006-2008	R
SM T	990	2009-2013	R
SUPERMOTO	990	2007-2012	R
SUPERMOTO R	990	2010-2012	R
ADVENTURE	1190	2013-2014	R
ADVENTURE R	1190	2013-2014	R
MBK			
SKYLINER	125	1998-2010	FL
THUNDER	125	2001-2003	FL
SKYLINER	150	1998-2002	FL
THUNDER	150	2001-2003	FL
SKYLINER	180	2003	FL
KILIBRE	300	2003-2004	FR
KILIBRE	300	2003-2004	R
MORINI			
GRANPASSO	1200	2008-2009	R
MOTO GUZZI			
BREVA	850	2006-2008	R
GRISO	850	2006	R
NORGE T-GTL	850	2007	R
NORGE T-GTL ABS	850	2007	R
BREVA	1100	2005-2007	R
BREVA ABS	1100	2005-2007	R
GRISO	1100	2005-2008	R
QUOTA ES	1100	1999	R
BREVA	1200	2008-2009	R
BREVA ABS	1200	2008-2009	R
GRISO 8 V	1200	2007-2013	R
NORGE T-GTL	1200	2006	R
NORGE T-GTL ABS	1200	2006-2009	R
SPORT	1200	2006-2007	R
SPORT 8V ABS	1200	2008-2010	R
SPORT ABS	1200	2006-2007	R
STELVIO	1200	2008-2009	R
PIAGGIO			
BEVERLY	400	2006-2007	FR
X9 EVOLUTION	500	2003-2007	FL/FR
X9 EVOLUTION ABS	500	2003	FL/FR
X9 EVOLUTION ABS	500	2006-2007	FL/FR
SHERCO			
2.5i 4T ENDURO	250	2006-2011	FL
SE i	250	2013-2014	FL
SEF	250	2013-2014	FL
SEF-R	250	2013-2014	FL
SE-R	250	2013-2014	FL
SE i	300	2013-2014	FL
SEF	300	2013-2014	FL
SEF-R	300	2013-2014	FL
SE-R	300	2013-2014	FL
4.5i 4T ENDURO	450	2007-2011	FL
5.1i 4T ENDURO	510	2006-2011	FL
SUZUKI			
BURGMAN	125	2002-2006	FL
BURGMAN	150	2002-2006	FL
DR Z	250	2001-2007	FL
TM			
EN	80	1998-2003	FL
GS- MC	80	1993-1997	FL
MX JR	85	2003-2014	FL
EN	125	1998-2014	FL
GS- MC	125	1993-1997	FL
MX	125	1998-2014	FL

MODELLO MODEL	CC	ANNO YEAR	POSIZIONE POSITION
EN	144	2008-2014	FL
EN	144	2013-2014	FL
MX	144	2007-2014	FL
EN	250	1998-2014	FL
EN	250	1998-2010	FL
EN	250	2013-2014	FL
EN F	250	2004-2012	FL
EN Fi	250	2010-2014	FL
EN Fi	250	2012-2014	FL
GS- MC	250	1995-1997	FL
MX	250	1998-2014	FL
MX Fi	250	2010-2014	FL
MX Fi	250	2012-2014	FL
EN	300	2005-2014	FL
MX	300	2005-2014	FL
MX	400	2003	FL
EN F	450	2005-2014	FL
MX F	450	2005-2014	FL
EN F	530	2005-2014	FL
MX F	530	2005-2014	FL

MODELLO MODEL	CC	ANNO YEAR	POSIZIONE POSITION
VOR			
EN E	450	2003	FL
MX- EN	450	2000-2002	FL
492 ENDURO	495	1998-1999	FL
495 CROSS	495	1998-1999	FL
MX- EN	503	2000-2002	FL
YAMAHA			
MAXTER	125	2001	FL
YP MAJESTY	125	1998-2009	FL
YZF R	125	2008-2013	FL
XQ MAXTER	150	2001	FL
YP MAJESTY	150	1998-2002	FL
YP MAJESTY	180	2003-2006	FL
XC	300	2004-2006	R
XC VERSITY	300	2003	FR
XC VERSITY	300	2003	R
TT	600	1993-2001	FL
TT R	600	1993-1995	FL
TT R	600	1998-2007	FL
XTZ TENERE	660	2008-2013	FL/FR

748

CM56
- Sinterizzata stradale post. uso sportivo
- Rear sintered pad

P30
- Sinterizzata scooter
- Scooter sintered pad

SM1
- Semimetallica polivalente
- Semi-metallic pad

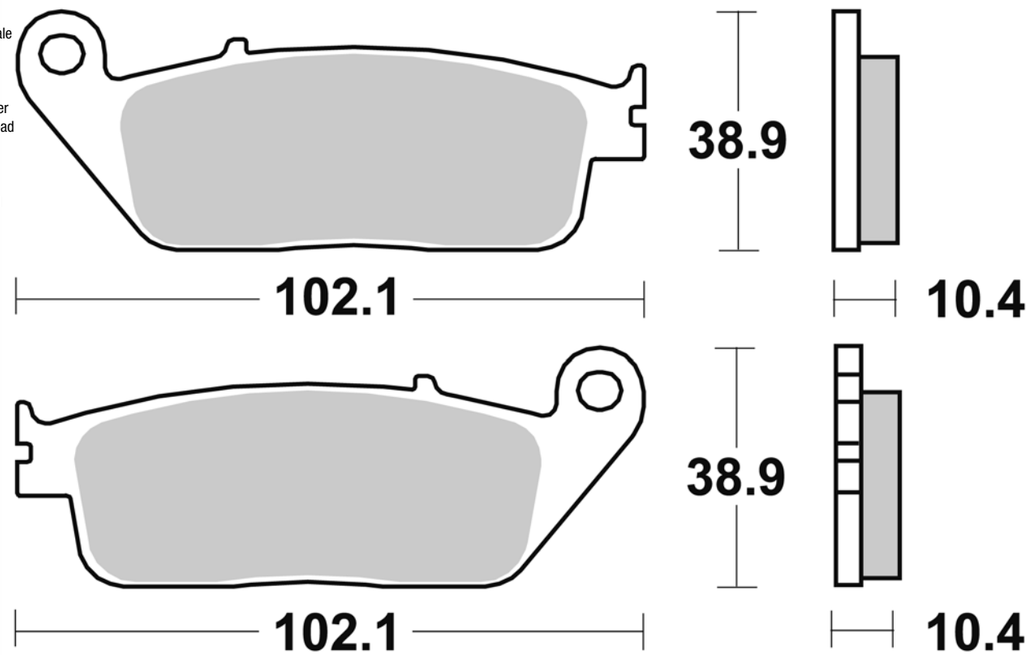

MODELLO MODEL	CC	ANNO YEAR	POSIZIONE POSITION
HONDA			
SILVER WING	400	2006-2008	R
SILVER WING	600	2001-2007	R
SILVER WING ABS	600	2003-2007	R
NTV REVERE	650	1994-1998	R
ST PAN EUROPEAN	1100	1991-1995	R
VOXAN			
SCRAMBLER	995	2002-2006	FL/FR

MODELLO MODEL	CC	ANNO YEAR	POSIZIONE POSITION
YAMAHA			
X-MAX YP R	125	2014	FL
X-CITY	250	2008-2014	FL
X-MAX YP R	250	2010-2014	FR
X-MAX YP R ABS	250	2011-2014	FR
X-MAX YP	400	2013-2014	FL/FR
X-MAX YP ABS	400	2014	FL/FR
MT01	1670	2005-2011	R

Le immagini hanno il solo scopo di presentare i prodotti.
The images used are aimed at presenting the products only.

FL > pastiglia anteriore sinistra / front left pad
FR > pastiglia anteriore destra / front right pad
R > pastiglia posteriore / rear pad

750

SM1
- Semimetallica polivalente
- Semi-metallic pad

P30
- Sinterizzata scooter
- Scooter sintered pad

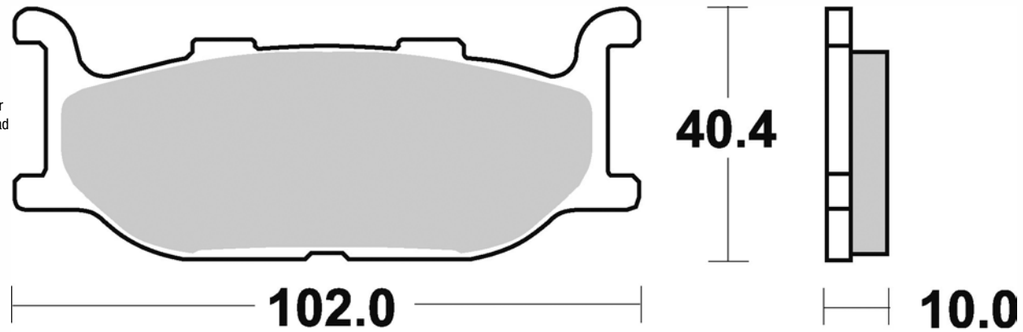

MODELLO MODEL	CC	ANNO YEAR	POSIZIONE POSITION
YAMAHA			
FZX ZEAL	250	1991	FR
SRV (Rear Drum Model)	250	1992-1997	FL
YP G GRAND MAJESTY [japan]	250	2004-2005	FL
SR	400	2014	FR
YP MAJESTY	400	2004	FL
XP T-MAX	500	2001-2003	FR
XVS VIRAGO (Rear Drum Model)	535	1996-2000	FR
XJ N	600	1991-1997	FL
XJ S DIVERSION	600	1991-1997	FL
XVS DRAG STAR (Rear Drum Model)	650	1997-2004	FR
XVS DRAG STAR CLASSIC (Rear Drum Model)	650	1998-2007	FR

MODELLO MODEL	CC	ANNO YEAR	POSIZIONE POSITION
XVS V-STAR	650	1998-2007	FR
XV VIRAGO (Rear Drum Model)	750	1990-1993	FL/FR
XV VIRAGO (Rear Drum Model)	750	1994-2000	FR
XJ S DIVERSION	900	1994-1996	FL/FR
XVS	950	2014	FL/FR
XVS A MIDNIGHT STAR	950	2009-2013	FL/FR
XVS ABS	950	2014	FL/FR
XVS R ABS	950	2014	FL/FR
XV VIRAGO (Rear Drum Model)	1100	1994-1998	FL/FR
XVZ TF ROYAL STAR VENTURE	1300	1999-2007	FL/FR
ROAD STAR	1600	1999-2007	FL/FR
WILD STAR	1600	1999-2007	FL/FR

751

SM1
- Semimetallica polivalente
- Semi-metallic pad

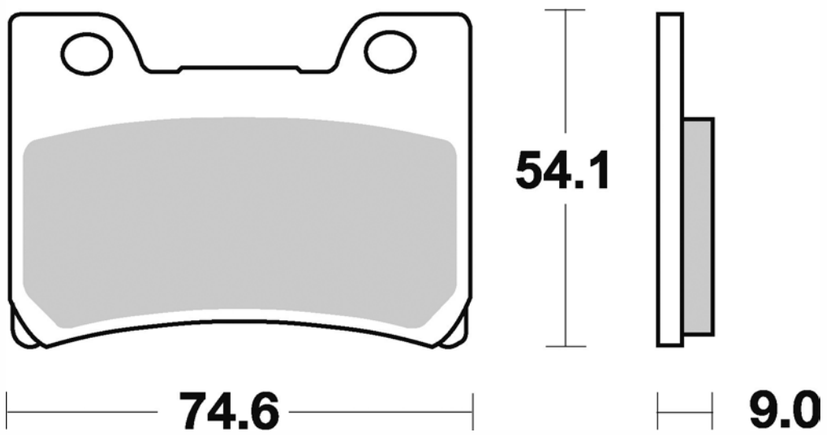

MODELLO MODEL	CC	ANNO YEAR	POSIZIONE POSITION
YAMAHA			
FZR R	600	1992-1995	FL/FR
FZR EXUP	1000	1992-1993	FL/FR

MODELLO MODEL	CC	ANNO YEAR	POSIZIONE POSITION

756

CM55
- Sinterizzata stradale ant. uso sportivo
- Front sintered pad

SM1
- Semimetallica polivalente
- Semi-metallic pad

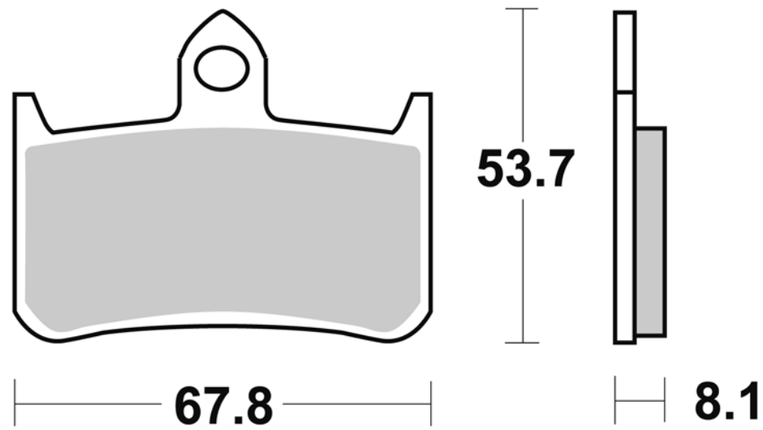

MODELLO MODEL	CC	ANNO YEAR	POSIZIONE POSITION
HONDA			
RS GP	125	1991-1996	FR
RS R	125	1991-1996	FR
CB F HORNET	250	1996-2001	FR
RS GP	250	1990-1992	FR
RS R	250	1990-1992	FL/FR
NTV BROS	400	1988-1995	FR
RVF RR	400	1990	FL/FR
VFR R	400	1991-1993	FL/FR

MODELLO MODEL	CC	ANNO YEAR	POSIZIONE POSITION
NTV BROS HAWK	600	1988-1990	FL/FR
RVF RC45	750	1994-1997	FL/FR
VFR R	750	1988-1991	FL/FR
CB F HORNET	900	2002-2006	FL/FR
CBR RR	900	1992-1997	FL/FR
CB F Big one	1000	1993-1995	FL/FR
VTR F FIRESTORM	1000	1997-2007	FL/FR
VTR F SUPER HAWK	1000	1997-2007	FL/FR
CB X4	1284	1997	FL/FR

757

SM1
- Semimetallica polivalente
- Semi-metallic pad

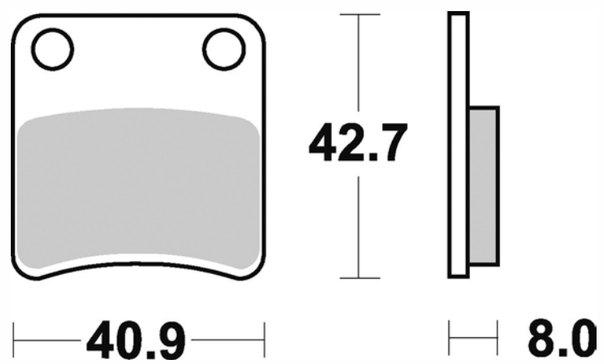

MODELLO MODEL	CC	ANNO YEAR	POSIZIONE POSITION
CAGIVA			
CITY	50	1992-1994	FL
DAELIM			
MESSAGE	50	1998	FL
HONDA			
HSC 01	50	1993	FL
SR DIO	50	1990	FL

MODELLO MODEL	CC	ANNO YEAR	POSIZIONE POSITION
ZX DIO	50	1992	FL
SYM			
CITY HOPPER	50	1999-2002	FL
ORBIT	50	2008-2009	FL
SUPER FANCY	50	1996-2006	FL
ORBIT	125	2008-2009	FL

Le immagini hanno il solo scopo di presentare i prodotti.
The images used are aimed at presenting the products only.

FL > pastiglia anteriore sinistra / front left pad
FR > pastiglia anteriore destra / front right pad
R > pastiglia posteriore / rear pad

760

SM1
- Semimetallica polivalente
- Semi-metallic pad

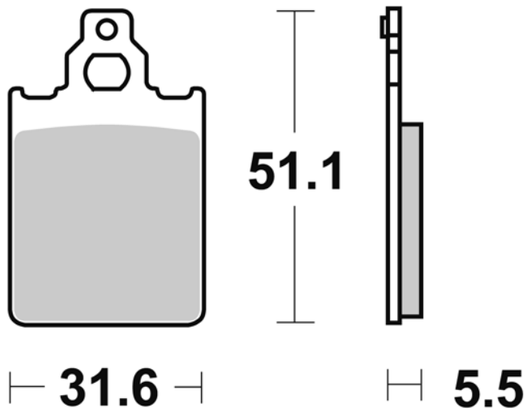

MODELLO MODEL	CC	ANNO YEAR	POSIZIONE POSITION
ITALJET			
FORMULA	50	1994-1997	FL
FORMULA	125	1997	FL
LML			
STAR 2T (Rear Drum Model)	125	2010-2012	FR
STAR 4T (Rear Drum Model)	125	2010-2012	FR
STAR DELUXE (Rear Drum Model)	125	2001-2003	FR
STAR 2T (Rear Drum Model)	150	2010-2012	FR
STAR 4T (Rear Drum Model)	150	2010-2012	FR
STAR DELUXE (Rear Drum Model)	150	2001-2003	FR

MODELLO MODEL	CC	ANNO YEAR	POSIZIONE POSITION
STAR 4T (Rear Drum Model)	151	2010-2012	FR
STAR 4T (Rear Drum Model)	200	2010-2012	FR
PIAGGIO			
QUARTZ (Rear Drum Model)	50	1991-1995	FL
SKIPPER	80	1994-1995	FL
SKIPPER	125	1993-1997	FL
VESPA PX	125	2001-2011	FR
SKIPPER	150	1993-1997	FL
VESPA PX (Rear Drum Model)	150	1998-2013	FR
VESPA PX	200	1998-2007	FR

761

SM1
- Semimetallica polivalente
- Semi-metallic pad

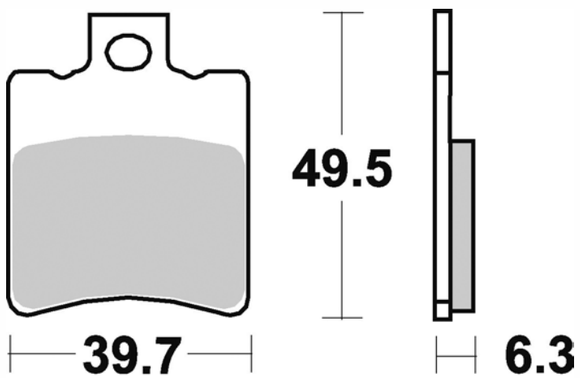

MODELLO MODEL	CC	ANNO YEAR	POSIZIONE POSITION
APRILIA			
AMICO SPORT LX	50	1992	FL
AREA 51	50	1998-2002	FL
AREA 51	50	1998-2002	R
AREA 51 SBK	50	2000-2002	FL
AREA 51 SBK	50	2000-2002	R
GULLIVER	50	1997-1999	FL
HABANA	50	1998-2002	FL
RALLY AC	50	1995-2000	FL
RALLY LC	50	1997	FL
RALLY LC	50	1997	R
SCARABEO	50	1994-2005	FL
SCARABEO 4t	50	2002-2009	FL
SCARABEO DE-LUX	50	1998	FL

MODELLO MODEL	CC	ANNO YEAR	POSIZIONE POSITION
SCARABEO DE-LUX	50	1998	R
SCARABEO DITECH	50	2001-2004	FL
SONIC (Rear Drum Model)	50	1998-2008	FL
SONIC GP (Rear Drum Model)	50	1998-2008	FL
SR RACING	50	2000	FL
SR STEALTH LC	50	1996-2000	FL
SR STEALTH LC	50	1996-2000	R
SR STREET	50	2003-2012	FL
LEONARDO	125	1996-1998	R
LEONARDO	125	1996	FL
LEONARDO	150	1997-1998	R
BENELLI			
491 GT	50	1997-2000	FL
491 K2 AIR	50	1998-2000	FL

MODELLO MODEL	CC	ANNO YEAR	POSIZIONE POSITION
491 K2 AIR	50	1998-2000	R
491 RACING	50	1999	FL
491 RACING	50	1999	R
491 SPORT	50	1998	FL
K2 LC	50	1999	FL
K2 LC	50	1999	R
PEPE	50	1999-2004	FL
K2	100	1999	FL
VELVET	125	1999-2004	FL
VELVET	150	1999-2004	FL
BETA			
ARK	50	1997	FL
ARK LC	50	1999	FL
ARK LC	50	1999	R
CHRONO 13	50	1994-1999	FL
EIKON	125	1999-2003	FL
EIKON	125	1999-2003	R
DERBI			
VAMOS R (Brembo cal.)	50	1995	FL
GILERA			
EAGLET	50	1994	FL
EASY MOVING	50	1996	FL
ICE	50	2001-2006	FL
NRG	50	1994	FL
RUNNER	50	1997-2000	FL
RUNNER DD - SP	50	1997-2004	FL
STALKER DD	50	1997-2001	FL
STALKER DD	50	1997-2001	R
STALKER DT	50	1997-2005	FL
STORM	50	1994	FL
HONDA			
SFX	50	1995	FL
SH FIFTY	50	1996	FL
SH SCOOPY	50	1996-1999	FL
SKY (Rear Drum Model)	50	1997-2003	FL
SZX X 8RS	50	1998-2004	FL
SZX X 8RX	50	1998-2004	FL
SH SCOOPY (Rear Drum Model)	100	1996-2001	FL
NSR F	125	1990-1992	R
ITALJET			
FORMULA	50	1994-1997	R
FORMULA	125	1997	R
KTM			
KROSS	50	1994-1999	FL
MALAGUTI			
CIAK	50	1999	FL
CROSSER EL	50	1997	FL
F10	50	1995-2005	FL
F10 JET LINE	50	1997-1999	FL
F12 PHANTOM A.C.	50	1999-2003	FL
F12 PHANTOM twin disk	50	1999-2005	FL
F12 PHANTOM twin disk	50	1999-2005	R
F12R PHANTOM A.C.	50	2007-2011	FL
F12R PHANTOM L.C.	50	2007-2011	R
F15 FIREFOX L.C.	50	1999-2005	FL
F15 FIREFOX L.C.	50	1999-2005	R
F15 FIREFOX twin disk	50	1996-1998	R
YESTERDAY	50	1997-2001	FL
CIAK	100	1999	FL
CIAK	100	1999	R
F12 PHANTOM twin disk	100	1999-2001	FL
F12 PHANTOM twin disk	100	1999-2001	R
CIAK	125	2001	FL
CIAK	125	2001	R
F18 WARRIOR	125	2000-2003	FL
CIAK	150	2001	FL
CIAK	150	2001	R
F18 WARRIOR	150	2000-2003	FL

MODELLO MODEL	CC	ANNO YEAR	POSIZIONE POSITION
MBK			
BOOSTER 10 WHEELS	50	2009-2010	FL
BOOSTER 12 WHEELS	50	2000-2010	FL
BOOSTER NAKED	50	2003-2006	FL
BOOSTER NAKED 12 WHEELS	50	2009	FL
BOOSTER NG	50	1995-1998	FL
BOOSTER R	50	1993-1995	FL
BOOSTER ROCKET	50	1997	FL
BOOSTER SPIRIT	50	1996-2005	FL
BOOSTER TRACK	50	1996-1998	FL
EVOLIS	50	1992-1994	FL
FIZZ	50	1994-1997	FL
FLIPPER	50	1999-2010	FL
FORTE (Rear Drum Model)	50	1994-1995	FL
MACH G	50	2002-2010	FL
OVETTO	50	1997-2010	FL
EVOLIS	80	1994-1997	FL
NITRO	100	1999-2003	FL
OVETTO	100	1999-2002	FL
DOODO	125	2000-2005	FL
DOODO	150	2000-2005	FL
MOTRON			
SPIKE	50	1998	FL
SYNCRO	50	1998	FL
PEUGEOT			
BUXY (Brembo)	50	1994-1999	FL
SPEEDAKE (Brembo)	50	1994-1999	FL
SPEEDFIGHT LC (Brembo)	50	1996-2000	FL
ZENITH LUXE	50	1996	FL
PIAGGIO			
NRG	50	1993-1995	FL
NRG EXTREME (rear disc/freno disco post)	50	1999-2001	FL
NRG EXTREME (rear drum/freno tamburo)	50	1999-2001	FL
NRG MC2	50	1997	FL
NRG MC3 DD	50	2001-2005	FL
NRG MC3 DT	50	2001-2005	FL
NTT	50	1994-1996	FL
TYPHOON	50	1993-1997	FL
TYPHOON 2T (GRIMECA CAL./10 WHEELS)	50	2000-2004	FL
TYPHOON 2T (HENG TONG CAL./10 WHEELS)	50	2001-2009	FL
TYPHOON X	50	1998-1999	FL
TYPHOON XR	50	2000	FL
ZIP FAST RIDER 2T	50	1993-1995	FL
FREE	100	2002	FL
HEXAGON	125	1993-1997	FL
TYPHOON	125	1995-2000	FL
HEXAGON	150	1994-1997	FL
VILLA			
GZ (Rear Drum Model)	50	1993	FL
YAMAHA			
AEROX	50	1997-2014	FL
AXIS	50	1994-1996	FL
BUMP	50	1997-2001	FL
BWS (Rear Drum Model)	50	1993-2014	FL
BWS NAKED (Rear Drum Model)	50	2003-2004	FL
BWS NAKED (Rear Drum Model)	50	2009-2014	FL
BWS NEXT GENERATION	50	1996-1998	FL
JOG R (Rear Drum Model)	50	2006-2011	FL
NEOS (Rear Drum Model)	50	1997-2014	FL
NEOS 4T (Rear Drum Model)	50	2009-2014	FL
SPY (Rear Drum Model)	50	1995-1998	FL
WHY	50	1999	FL
YM BREEZE (Rear Drum Model)	50	1994-1998	FL
AEROX	100	2000-2002	FL
NEOS (Rear Drum Model)	100	2000-2002	FL
TEOS	125	2000	FL
TEOS	150	2002	FL

Le immagini hanno il solo scopo di presentare i prodotti.
The images used are aimed at presenting the products only.

FL > pastiglia anteriore sinistra / front left pad
FR > pastiglia anteriore destra / front right pad
R > pastiglia posteriore / rear pad

764

CM66
- Semimetallica uso racing
- Semi-metallic pad racing use only

CM55
- Sinterizzata stradale ant. uso sportivo
- Front sintered pad

SM1
- Semimetallica polivalente
- Semi-metallic pad

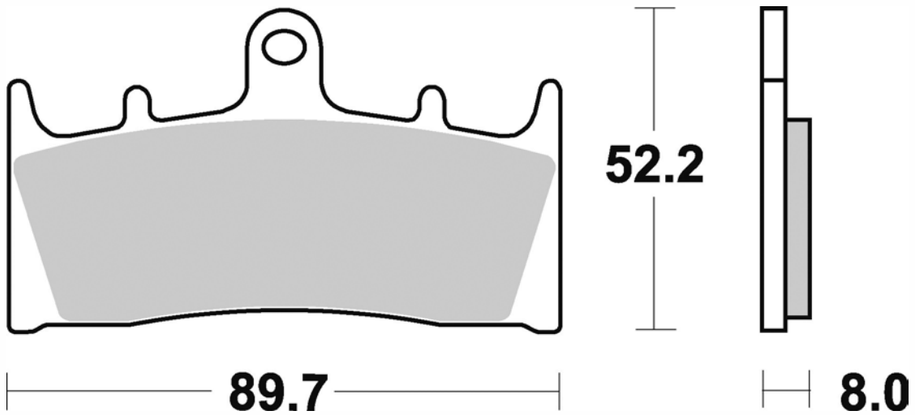

MODELLO MODEL	CC	ANNO YEAR	POSIZIONE POSITION
KAWASAKI			
ZX6R NINJA	600	1998-2001	FL/FR
ZX6R NINJA	636	2002	FL/FR
ZX7R NINJA	750	1996-2003	FL/FR
GPZ R	900	1999-2003	FL/FR
ZX9R NINJA	900	1998-2001	FL/FR
ZRX	1100	1997-2000	FL/FR
ZRX	1200	2001-2006	FL/FR
ZRX R	1200	2001-2006	FL/FR
ZRX S	1200	2001-2006	FL/FR
ZX12R NINJA	1200	2000-2003	FL/FR

MODELLO MODEL	CC	ANNO YEAR	POSIZIONE POSITION
VN MEAN STREAK	1500	2002-2003	FL/FR
VN MEAN STREAK	1600	2004-2005	FL/FR
SUZUKI			
GSX R	750	1994-1999	FL/FR
GSX R	1000	2001-2002	FL/FR
TL R	1000	1998-2003	FL/FR
GSX R	1100	1993-2000	FL/FR
GSF BANDIT	1200	2001-2005	FL/FR
GSX R HAYABUSA	1300	1999-2007	FL/FR
GSX	1400	2002-2007	FL/FR
VZ MARAUDER	1600	2004-2006	FL/FR

770

SM1
- Semimetallica polivalente
- Semi-metallic pad

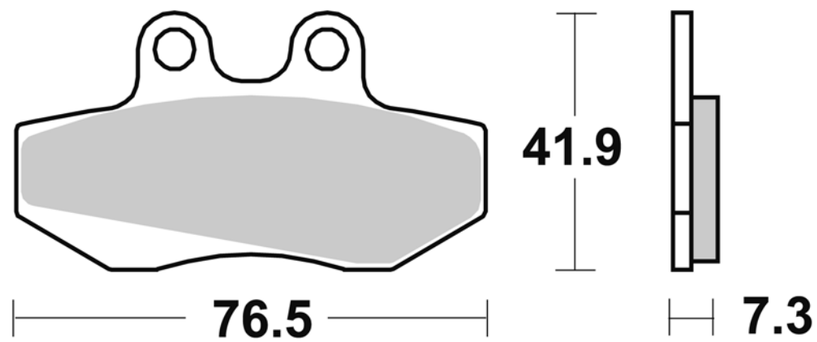

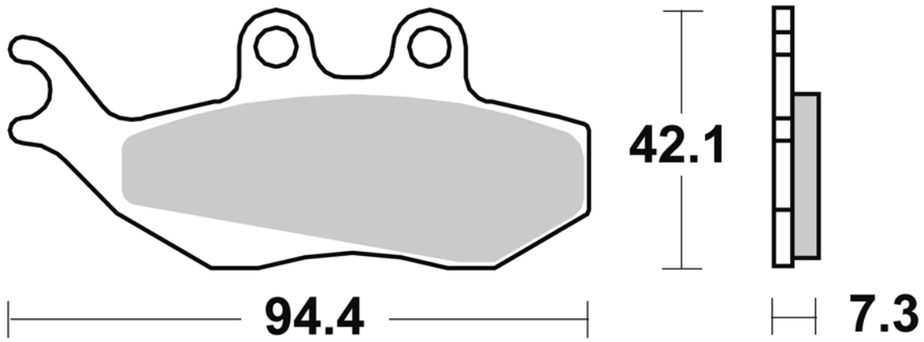

MODELLO MODEL	CC	ANNO YEAR	POSIZIONE POSITION
APRILIA			
MX	50	2003	FL
RS REPLICA	50	1999-2006	FL
RX	50	1990	FL
RX	50	1995-2004	FL
RX	50	2006-2010	FL
RX RACING	50	2004-2006	FL
SX	50	2006-2010	FL
TUONO	50	2003-2007	FL
RX	125	1992-2000	FL
BENELLI			
VELVET	250	1999-2003	FL
VELVET DUSK	400	2003-2004	FL
BETA			
RR ENDURO	50	2008-2014	FL
RR ENDURO Alu	50	1999-2004	FL
RR ENDURO FACTORY	50	2012-2014	FL
RR MOTARD STANDARD	50	2013-2014	FL
RR STANDARD	50	2005-2008	FL
RR SUPERMOTARD Alu	50	2004	FL
ALP 4T	125	2006-2014	FL
RR	125	2006-2014	FL
RR SUPERMOTARD	125	2006-2014	FL
URBAN	125	2008-2014	FL
URBAN SPECIAL	125	2009-2014	FL
ALP 4T	200	2006-2014	FL
URBAN	200	2008-2014	FL
URBAN SPECIAL	200	2009-2014	FL
4.0 Alp	350	2003-2006	FL
DERBI			
BLACK DEVIL	50	2004	FL
DRD RACING R	50	2005	FL
DRD RACING SM	50	2005	FL
GP1 OPEN	50	2006-2011	FL
SENDA DRD RACING R	50	2004-2012	FL
SENDA DRD RACING SM	50	2004-2013	FL
CROSS CITY	125	2007-2008	FL

MODELLO MODEL	CC	ANNO YEAR	POSIZIONE POSITION
MULHACEN	125	2007-2008	FL
SENDA BAJA R Enduro	125	2009-2012	FL
SENDA BAJA SM	125	2006-2012	FL
SENDA R 4t	125	2004-2010	FL
SENDA SM 4t	125	2004-2007	FL
FANTIC M.			
CABALLERO MOTARD	50	2006-2009	FL
CABALLERO MOTARD	125	2007-2009	FL
GAS GAS			
PAMPERA 4T	125	2004-2005	FL
PAMPERA	280	2004-2005	FL
GILERA			
DNA (Grimeca)	50	2000-2002	FL
DNA (Grimeca)	125	2001-2002	FL
RUNNER FX	125	2000-2005	FL
RUNNER FX SP (Grimeca)	125	2002-2005	FL
RUNNER FX SP scooter	125	1999-2001	FL
RUNNER VXR 4t (Grimeca)	125	2001-2003	FL
DNA (Grimeca)	180	2001-2003	FL
RUNNER FXR 2t	180	1998-1999	FL
RUNNER FXR 2t (Grimeca)	180	2000-2005	FL
RUNNER FXR SP 2t (Grimeca)	180	1999-2005	FL
RUNNER VXR 4t (Grimeca)	180	2001-2005	FL
RUNNER VXR 4t (Grimeca)	200	2002-2005	FL
HONDA-HM			
CR E	50	1999-2002	FL
CR E DERAPAGE	50	1999-2005	FL
CRE BAJA	50	2003-2009	FL
CRE BAJA RR	50	2007-2009	FL
CRE DERAPAGE	50	2003-2009	FL
CRE DERAPAGE RR	50	2007-2009	FL
CRE SIX	50	2003-2009	FL
CRE SIX COMPETITION	50	2007-2008	FL
CRM DERAPAGE COMPETITION	50	2007-2008	FL
CRE F X	125	2008-2009	FL
CRM F X	125	2008-2009	FL
MALAGUTI			

Le immagini hanno il solo scopo di presentare i prodotti.
The images used are aimed at presenting the products only.

FL > pastiglia anteriore sinistra / front left pad
FR > pastiglia anteriore destra / front right pad
R > pastiglia posteriore / rear pad

MODELLO MODEL	CC	ANNO YEAR	POSIZIONE POSITION
XSM	50	2003	FL
MADISON	125	1999-2001	FL
MADISON R	125	1999-2005	FL
PHANTOM MAX	125	2004	FL
MADISON	150	1999-2001	FL
MADISON F	150	2000-2001	FL
MADISON	180	2001-2002	FL
MADISON S	200	2003-2004	FL
PHANTOM MAX	200	2004	FL
MADISON RS	250	2004-2005	FL
PASSWORD	250	2005-2009	FL
PHANTOM MAX	250	2005-2006	FL
MBK			
X-LIMIT SUPERMOTO	50	2003-2010	FL
X-POWER	50	2004-2010	FL
PEUGEOT			
XPS SM	50	2004	FL
ELYSEO	125	2000	FL
JET FORCE	125	2003	FL
SATELIS	125	2004	FL
SATELIS ABS	125	2004	FL
ELYSEO	150	2000	FL
ELYSTAR	150	2003	FL

MODELLO MODEL	CC	ANNO YEAR	POSIZIONE POSITION
SATELIS (AJP caliper)	250	2007-2011	FL
PIAGGIO			
BEVERLY (grimeca caliper)	125	2002-2006	FL
BEVERLY (grimeca caliper)	125	2002-2006	R
HEXAGON LX	125	1998-2001	FL
SKIPPER LX	125	1998-2002	FL
SKIPPER ST 4T (grimeca caliper)	125	2000-2004	FL
SUPER HEXAGON GTX (grimeca caliper)	125	2000	FL
SKIPPER LX	150	1998-2006	FL
SKIPPER ST 4T (grimeca caliper)	150	2000-2004	FL
SUPER HEXAGON GTX	150	2000	FL
HEXAGON LXT (Rear Drum Model)	180	1998-2001	FL
SUPER HEXAGON GTX (grimeca caliper)	180	2000	FL
BEVERLY (grimeca caliper)	200	2002-2006	FL
BEVERLY (grimeca caliper)	200	2002-2006	R
HEXAGON GT	250	1998-2001	FR
HEXAGON GTX	250	1998-2000	FR
SUPER HEXAGON GT-GTX	250	2000	FL
YAMAHA			
DT SM	50	2005-2006	FL
TZR	50	2007-2011	FL
XT X SM	125	2005-2009	FL

772

CM46
- Sinterizzata off-road uso racing
- Offroad sintered pad racing use

CM44
- Sinterizzata off-road
- Offroad sintered pad

SM1
- Semimetallica polivalente
- Semi-metallic pad

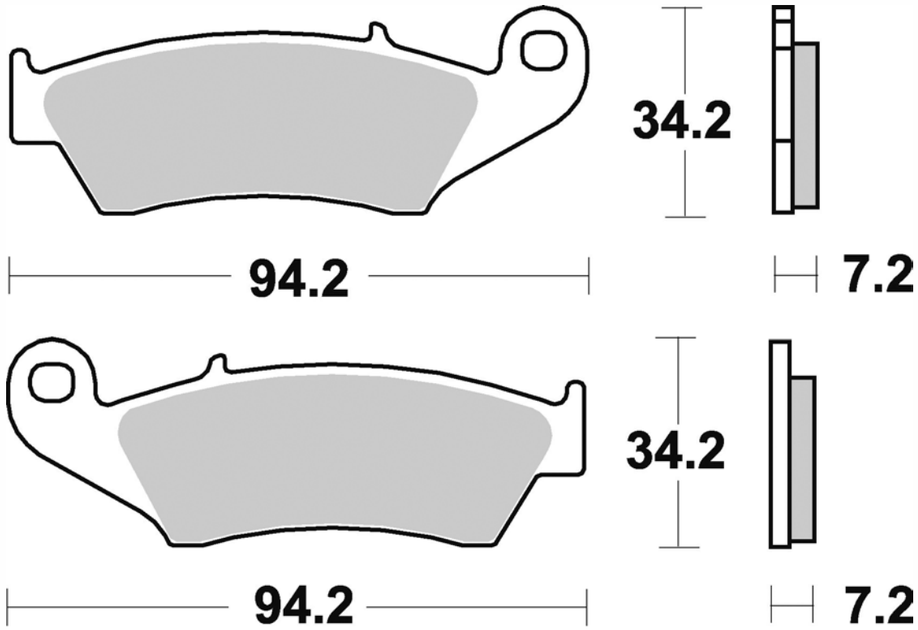

MODELLO MODEL	CC	ANNO YEAR	POSIZIONE POSITION
APRILIA			
MXV	450	2009-2010	FL
RXV	450	2005-2011	FL
RXV	550	2005-2011	FL
BETA			
RR	250	2005-2009	FL
RR 2T ENDURO	250	2013-2014	FL
RR 2T RACING	250	2013-2014	FL
RR 2T ENDURO	300	2013-2014	FL
RR 2T RACING	300	2013-2014	FL

MODELLO MODEL	CC	ANNO YEAR	POSIZIONE POSITION
RR 4T ENDURO	350	2011-2014	FL
RR 4T RACING	350	2014	FL
RR 4T ENDURO	400	2005-2014	FL
RR 4T ENDURO	450	2005-2014	FL
RR 4T RACING	450	2013-2014	FL
RR CROSS COUNTRY	450	2012	FL
RR 4T ENDURO	498	2012-2014	FL
RR 4T RACING	498	2013-2014	FL
RR 4T ENDURO	520	2010-2011	FL
RR 4T ENDURO	525	2005-2009	FL

MODELLO MODEL	CC	ANNO YEAR	POSIZIONE POSITION
GAS GAS			
EC ROLLER	50	2001	FL
EC	125	2000-2011	FL
EC RACING	125	2013-2014	FL
MC	125	2000-2009	FL
EC	200	2000-2014	FL
HOBBY	200	2007	FL
EC	250	2000-2010	FL
EC 2T	250	2011-2014	FL
EC 4T	250	2011-2014	FL
EC F RACING	250	2013-2014	FL
EC RACING	250	2012-2013	FL
MC	250	2000-2009	FL
EC	300	2000-2012	FL
EC 2T	300	2013-2014	FL
EC F RACING	300	2013-2014	FL
EC RACING	300	2012-2013	FL
MC	300	2000-2009	FL
EC	400	2002	FL
EC	400	2006-2007	FL
FSE	400	2002	FL
MC	400	2002	FL
MC	400	2006-2007	FL
PAMPERA	400	2006-2007	FL
EC	450	2003-2007	FL
EC F	450	2013-2014	FL
FSE	450	2003-2006	FL
MC	450	2003	FL
MC	450	2007	FL
HONDA			
CR E	125	1995-2008	FL
CR R	125	1995-2008	FL
CRF TRAIL	230	2004-2010	FL
SL	230	1997-2001	FL
CR E	250	1995-2008	FL
CR R	250	1995-2008	FL
CRF R	250	2004-2014	FL
CRF X	250	2004-2009	FL
CRF X	250	2012	FL
TRX R	250	1986-1989	FL/FR
XR R	250	1996-2004	FL
ATC X	350	1986	FL/FR
XR R	400	1995-2005	FL
XR SUPERMOTARD	400	2000-2005	FL
CRF R	450	2002-2014	FL
CRF X	450	2004-2009	FL
CRF X	450	2012	FL
TRX R	450	2004-2009	FL/FR
CR E	500	1994-2001	FL
CR R	500	1994-2001	FL
XL V TRANSALP	600	1997-1999	FL/FR
XR R	600	1994-2000	FL
XL V TRANSALP	650	2000-2007	FL/FR
XR L	650	1993-2012	FL
XR R	650	2000-2008	FL
XR SUPERMOTARD	650	2000-2008	FL
XL V TRANSALP	700	2008-2011	FL/FR
XRV AFRICA TWIN	750	1993-2002	FL/FR
HONDA-HM			
CR E SUPERMOTARD	125	2000-2008	FL
CR SUPERMOTARD	125	2004-2006	FL
CRE	125	1995-2001	FL
CRE R ENDURO	125	2002-2007	FL
CRE R SUPERMOTARD	125	2002-2006	FL
CRE SIX COMPETITION 2T	125	2011	FL
CRF ENDURO	230	2004-2010	FL
CRF ENDURO	230	2004-2005	FL
CRF ENDURO	230	2004	FL
CRF ENDURO	230	2005-2006	FL
CRF ENDURO	230	2006-2007	FL
CRF ENDURO	230	2007-2008	FL
CRF ENDURO	230	2008-2009	FL
CRF ENDURO	230	2009-2010	FL
CRF ENDURO	230	2010	FL
CRF MOTARD	230	2004-2010	FL
CRF SUPERMOTARD	230	2004-2010	FL

MODELLO MODEL	CC	ANNO YEAR	POSIZIONE POSITION
CRF TRIAL	230	2004-2010	FL
CR E SUPERMOTARD	250	2000-2004	FL
CR E SUPERMOTARD	250	2004-2005	FL
CR E SUPERMOTARD	250	2005-2009	FL
CR E SUPERMOTARD	250	2000-2009	FL
CR R	250	2004	FL
CRE	250	1997-2002	FL
CRE F	250	2004-2009	FL
CRE F 250 R	250	2004-2009	FL
CRE F 250 X	250	2008-2011	FL
CRE R ENDURO	250	2002-2007	FL
CRE R SUPERMOTARD	250	2002-2003	FL
CRE X	250	2004-2009	FL
CRF F	250	2004-2009	FL
CRF MOTARD	250	2004-2006	FL
CRF R	250	2008-2013	FL
CRF R SUPERMOTARD	250	2004-2008	FL
CRF X SUPERMOTARD	250	2004-2008	FL
CRE	260	1995-1998	FL
CRE F 290 C	290	2007	FL
CRE F 300 X	300	2008-2009	FL
CRE F	450	2002	FL
CRE F 450 R ENDURO	450	2004-2008	FL
CRE F 450 X	450	2004-2009	FL
CRE F SUPERMOTO	450	2002-2003	FL
CRE R ENDURO	450	2002-2007	FL
CRF MOTARD	450	2004-2006	FL
CRF R	450	2004-2014	FL
CRF SUPERMOTARD	450	2002-2003	FL
CRF X SUPERMOTARD	450	2004-2009	FL
CRE F 490 X	490	2007	FL
CRE F 500 X	500	2008-2009	FL
KAWASAKI			
KX	125	1994-2008	FL
KDX	220	1994-2005	FL
KLR	250	1995-2007	FL
KLX R	250	1993-1996	FL
KX	250	1994-2008	FL
KX F	250	2004-2015	FL
KLX R	300	1997-2007	FL
KLX R	400	2003-2007	FL
KLX R	450	2007-2014	FL
KX F	450	2006-2015	FL
KX	500	1994-2004	FL
KLX	650	1993-1996	FL
KLX R	650	1993-2003	FL
KLX S	650	1993-1994	FL
SUZUKI			
DR SM	125	2008-2012	FL
RM	125	1996-2009	FL
SV SM	125	2005-2006	FL
SV SM (Italy)	125	2005-2006	FL
RM	250	1996-2012	FL
RMZ	250	2004-2015	FL
DRZ E	400	2000-2008	FL
DRZ S	400	2000-2009	FL
DRZ SM	400	2004-2005	FL
DRZ SM	400	2005-2006	FL
DRZ SM	400	2006-2009	FL
RMX	450	2010-2012	FL
RMZ	450	2005-2015	FL
YAMAHA			
WR	125	1998-2007	FL
YZ	125	1998-2007	FL
WR	250	1998-2001	FL
WR	250	2003-2007	FL
WR F	250	2001-2013	FL
WR R	250	2008-2013	FL
YZ	250	1998-2007	FL
YZ F	250	2001-2006	FL
WR F	400	1998-2000	FL
YZ F	400	1998-2000	FL
WR F	426	2001-2002	FL
YZ F	426	2000-2002	FL
WR F	450	2003-2014	FL
YZ F	450	2003-2007	FL

Le immagini hanno il solo scopo di presentare i prodotti.
The images used are aimed at presenting the products only.

FL > pastiglia anteriore sinistra / front left pad
FR > pastiglia anteriore destra / front right pad
R > pastiglia posteriore / rear pad

773

CM46
- Sinterizzata off-road uso racing
- Offroad sintered pad racing use

CM44
- Sinterizzata off-road
- Offroad sintered pad

CM56
- Sinterizzata stradale post. uso sportivo
- Rear sintered pad

SM1
- Semimetallica polivalente
- Semi-metallic pad

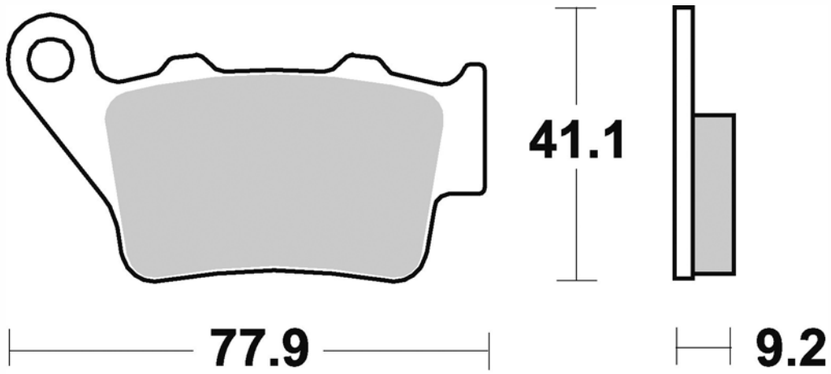

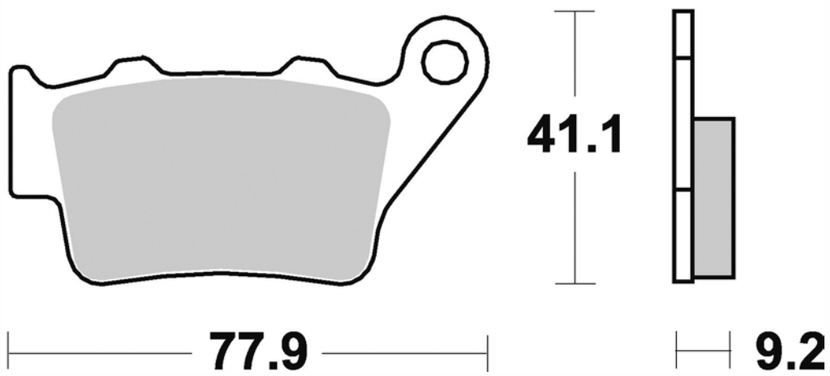

MODELLO MODEL	CC	ANNO YEAR	POSIZIONE POSITION
APRILIA			
PEGASO FACTORY	650	2007	R
PEGASO STRADA	650	2005-2009	R
PEGASO TRAIL	650	2005-2008	R
DORSODURO	750	2008-2014	R
DORSODURO FACTORY	750	2010-2011	R
SHIVER GT	750	2009	R
SL SHIVER	750	2007-2014	R
CAPONORD	1200	2013-2014	R
DORSODURO	1200	2011-2013	R
DORSODURO ABS	1200	2011-2012	R
BETA			
EURO	350	1999-2006	R
EURO	350	1999-2000	R
EURO	350	2001-2006	R
JONATHAN	350	2002-2006	R
BMW			
C1 scooter	125	2000	R
C1 scooter	200	2002	R
F 650	650	1994-2001	R
F 650 CS	650	2002-2007	R
F 650 GS	650	2001-2007	R
F 650 GS ABS	650	2001-2007	R
F 650 GS DAKAR	650	1999-2007	R
F 650 ST	650	1997-2001	R
G 650 GS	650	2009-2014	R
G 650 GS SERTAO	650	2012-2014	R
G 650 X CHALLENGE	650	2007-2009	R
G 650 X COUNTRY	650	2007-2009	R
G 650 X Moto	650	2007-2009	R
G 650 X Moto	650	2007-2009	R
F 650 GS	800	2008-2012	R

MODELLO MODEL	CC	ANNO YEAR	POSIZIONE POSITION
F 650 GS ABS	800	2008-2011	R
F 700 GS	800	2013-2014	R
F 800 GS	800	2009-2014	R
F 800 GS ADVENTURE	800	2013-2014	R
F 800 GT	800	2013-2014	R
F 800 R	800	2009	R
F 800 R	800	2010-2014	R
F 800 S	800	2006-2010	R
F 800 ST	800	2006-2012	R
HP4	1000	2013-2014	R
S 1000 R	1000	2014	R
S 1000 RR	1000	2010-2014	R
CCM			
604 RS	600	2001	R
604E SPORT	600	1999-2001	R
604E SUPERMOTO	600	1999-2001	R
C25	600	1996-1998	R
DS	644	2002-2006	R
R30	644	2002-2006	R
DUCATI			
GT	1000	2006-2010	R
GT TOURING	1000	2009	R
PAUL SMART LE	1000	2006-2007	R
SPORT	1000	2006-2008	R
SPORT S	1000	2007-2009	R
GAS GAS			
EC	125	1996-1999	R
MC	125	1996-1999	R
EC	250	1996-1999	R
MC	250	1996-1999	R
EC	300	1996-1999	R
MC	300	1996-1999	R

MODELLO MODEL	CC	ANNO YEAR	POSIZIONE POSITION
HIGHLAND			
MX	450	2006	R
V2 MOTARD	950	2000	R
V2 OUTBACK (EBE)	950	1999	R
HONDA			
CB	500	1997-2003	R
FX VIGOR	650	1999-2003	R
NX DOMINATOR	650	1997-2004	R
NX DOMINATOR 34 HP	650	1997-2002	R
SLR	650	1996-1999	R
HRD			
GS 97	250	1997	R
HUSABERG			
FE	350	1994-1999	R
FE	400	1998-2003	R
FE E	400	2001-2003	R
FS C	400	2001-2003	R
FS E	400	2001-2003	R
FC	450	1994-2005	R
FE E	450	2004-2008	R
FS C	450	2003-2008	R
FS E	450	2003-2008	R
FX E	450	2003-2005	R
FC	470	2001-2002	R
FX E	470	2001-2002	R
FC	501	1999-2003	R
FE	501	1994-1998	R
FE E	501	1999-2004	R
FE S	501	1999-2004	R
FC	550	2001-2005	R
FE E	550	2004-2008	R
FC	600	1994-2003	R
FE E	600	1999-2002	R
FE S	600	1999-2003	R
FE E	650	2001-2008	R
FS C	650	2001-2008	R
FS E	650	2001-2008	R
FX E	650	2001-2005	R
HUSQVARNA			
CR	125	2000-2004	R
SM S	125	1995-1999	R
SM S	125	2000-2012	R
SM S	125	1995-2012	R
SMS4	125	2010-2011	R
TE	125	2010-2013	R
WR	125	1995-2005	R
WR E	125	1995-2012	R
CR	250	1995-1999	R
CR	250	2000-2004	R
CR	250	2005-2011	R
WR	250	1995-2013	R
WR	300	2009-2013	R
TE	350	1995-1996	R
WR	360	2000-2004	R
TE	410	1995-2001	R
SMR	450	2003-2010	R
TE	450	2002-2005	R
SMR	510	2005-2010	R
TC	510	2002-2004	R
TE Centennial	510	2004	R
NOX	570	2001-2003	R
SMR	570	2000-2004	R
TC	570	2000-2003	R
TE	570	2001-2004	R
TE 610 E	600	1998-1999	R
TE 610 E SUPERMOTARD	600	1998	R
SM	610	2005-2006	R
SM S	610	2000-2004	R
SM S ie	610	2007-2008	R
TC	610	1995-2004	R
TE	610	1995-2004	R
TE E	610	2005-2007	R
SMR	630	2004-2005	R
TE	630	2010-2012	R
TE	630	2010-2012	R
TR 650 STRADA	650	2013-2014	R
TR 650 TERRA	650	2013-2014	R
NUDA	900	2012-2013	R

MODELLO MODEL	CC	ANNO YEAR	POSIZIONE POSITION
NUDA R	900	2012-2013	R
NUDA R ABS	900	2013	R
KRAMIT			
GS- MX	250	1997	R
SM	250	1997	R
SMR	250	2000	R
KTM			
DUKE	125	2011-2014	R
EXC	125	1998-2003	R
GS	125	1994-1997	R
RC	125	2014	R
STING	125	1998	R
SX	125	1994-2003	R
SXS	125	2000-2003	R
DUKE	200	2012-2014	R
EXC	200	2000-2002	R
MXC	200	1998-2003	R
RC	200	2014	R
EXC	250	1998-2003	R
EXC F	250	2003	R
GS	250	1994-1997	R
MXC	250	1998-2003	R
SX	250	1994-2002	R
EXC	300	1997-2003	R
GS	300	1995-1996	R
MXC	300	1998-2003	R
SX	300	1997-2003	R
EXC	380	1998-2002	R
MXC	380	1998-2001	R
SX	380	1998-2002	R
DUKE	390	2013-2014	R
RC	390	2014	R
EGS	400	1996-1999	R
EXC	400	1994-1999	R
EXC	400	2000-2003	R
SX	400	2000-2002	R
EXC	450	2003	R
MXC	450	2003	R
SX	500	1995	R
EXC	520	2000-2002	R
MXC	520	2001-2002	R
SX	520	2000-2002	R
EXC	525	2003	R
MXC	525	2003	R
SX	525	2003	R
SXC	540	1999-2000	R
SXS	540	2001-2002	R
DUKE	620	1995-1998	R
LC4 ADVENTURE	620	1997-1998	R
LC4 EGS	620	1996-2002	R
LC4 SC SUPERCOMP	620	1998-2004	R
LC4 SUPERMOTO	620	1999-2001	R
LC4 SC SUPERCOMP	625	2002	R
LC4 SUPERMOTO	625	2002-2004	R
SMC	625	2005-2008	R
SXC	625	2003-2008	R
SMR	630	2004-2005	R
DUKE II	640	1999-2006	R
DUKE-E	640	1998	R
LC4 ADVENTURE	640	1998-2007	R
LC4 ENDURO	640	1999-2007	R
LC4 SUPERMOTO	640	1998-2007	R
SMC	660	2003-2007	R
DUKE	690	2008-2014	R
DUKE R	690	2010-2011	R
DUKE R	690	2013-2014	R
ENDURO	690	2008-2010	R
ENDURO R	690	2008-2014	R
SMC	690	2008-2011	R
SMC R	690	2012-2014	R
SUPERMOTO	690	2007-2008	R
SUPER DUKE	990	2005-2011	R
SUPER DUKE R	990	2007-2013	R
SYM			
MAXSYM	400	2011-2014	R
MAXSYM ABS	400	2012-2014	R
TM			
EN	80	1998-2001	R

Le immagini hanno il solo scopo di presentare i prodotti.
The images used are aimed at presenting the products only.

FL > pastiglia anteriore sinistra / front left pad
FR > pastiglia anteriore destra / front right pad
R > pastiglia posteriore / rear pad

MODELLO MODEL	CC	ANNO YEAR	POSIZIONE POSITION
GS- MC	80	1993-1997	**R**
EN	125	1998-2001	**R**
GS- MC	125	1993-1997	**R**
GS- MC	125	1993-1997	**R**
MX	125	1998-2002	**R**
EN	250	1998-2001	**R**
GS- MC	250	1995-1997	**R**
MX	250	1998-2001	**R**
VOR			
MX- EN	400	2000-2002	**R**
SM	400	2000-2002	**R**
EN E	450	2003	**R**
MX- EN	450	2000-2002	**R**
SM RC	450	2002	**R**
492 ENDURO	495	1998-1999	**R**

MODELLO MODEL	CC	ANNO YEAR	POSIZIONE POSITION
495 CROSS	495	1998-1999	**R**
495 SM	495	1999	**R**
MX- EN	503	2000-2002	**R**
SM	503	2000-2002	**R**
SM RC	530	2000-2002	**R**
YAMAHA			
WR R	125	2009-2011	**R**
WR X	125	2009-2013	**R**
X-MAX YP R	250	2014	**R**
TT	600	1993-2001	**R**
TT R	600	1998-2007	**R**
MT03	660	2006-2011	**R**
XT R	660	2004-2014	**R**
XT X	660	2004-2014	**R**
XTZ TENERE	660	2008-2013	**R**

774

SM1
- Semimetallica polivalente
- Semi-metallic pad

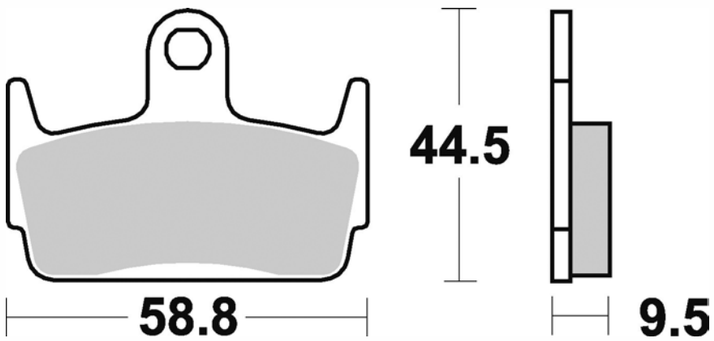

MODELLO MODEL	CC	ANNO YEAR	POSIZIONE POSITION
HONDA			
SZX X 8RS	50	1998-2004	**R**
SZX X 8RX	50	1998-2004	**R**
KYMCO			
SNIPER DD	50	1994-1996	**R**
HEROISM	150	1995-1997	**R**

MODELLO MODEL	CC	ANNO YEAR	POSIZIONE POSITION

775

CM56
- Sinterizzata stradale post. uso sportivo
- Rear sintered pad

SM1
- Semimetallica polivalente
- Semi-metallic pad

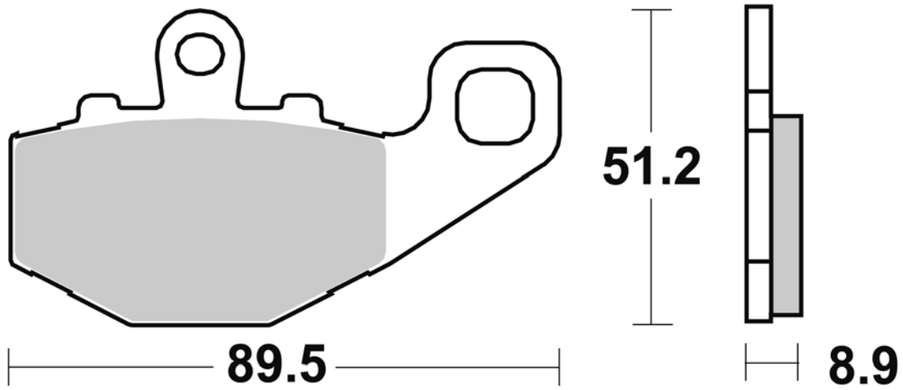

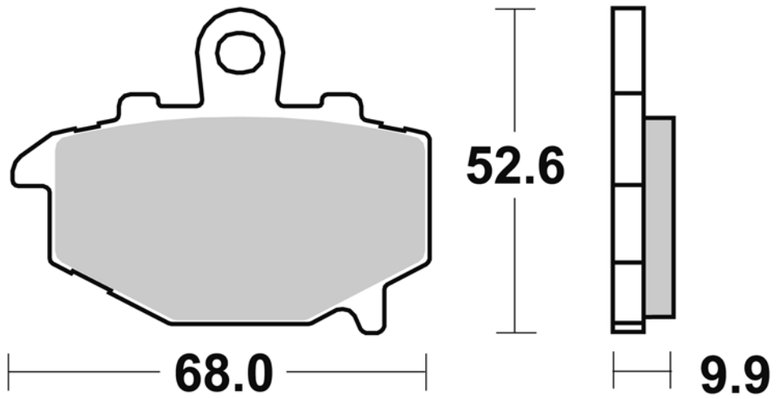

MODELLO MODEL	CC	ANNO YEAR	POSIZIONE POSITION
KAWASAKI			
ZEPHYR	550	1993-2001	**R**
ZEPHYR	550	1993-2000	**R**
ZEPHYR	550	2001	**R**
ZX6R NINJA	600	1995-2001	**R**
ZX6R NINJA	600	2007-2014	**R**
ZX6RR NINJA	600	2003-2006	**R**
ZZR	600	1993-2006	**R**
ZX6R NINJA	636	2002-2006	**R**
ER6F	650	2006-2014	**R**
ER6F ABS	650	2006-2013	**R**
ER6N	650	2006-2014	**R**
ER6N ABS	650	2006-2014	**R**
VERSYS	650	2007-2014	**R**
VERSYS ABS	650	2007-2014	**R**

MODELLO MODEL	CC	ANNO YEAR	POSIZIONE POSITION
Z 750	750	2004-2006	**R**
Z 750 S	750	2005-2006	**R**
ZX9R NINJA	900	1994-2001	**R**
ZX9R NINJA	900	2002-2003	**R**
Z 1000	1000	2003-2006	**R**
Z 1000	1000	2010-2014	**R**
Z 1000 - ABS	1000	2010-2014	**R**
Z 1000 SX	1000	2011-2014	**R**
Z 1000 SX ABS	1000	2011-2014	**R**
ZX-10R	1000	2004-2010	**R**
ZX-10R	1000	2004-2007	**R**
ZX-10R	1000	2008-2010	**R**
GPZ	1100	1995-1998	**R**
GPZ	1100	1995-1997	**R**
GPZ	1100	1998	**R**

Le immagini hanno il solo scopo di presentare i prodotti.
The images used are aimed at presenting the products only.

FL > pastiglia anteriore sinistra / front left pad
FR > pastiglia anteriore destra / front right pad
R > pastiglia posteriore / rear pad

776

P1R
- Sinterizzata racing
- Sintered pad racing use only

CM66
- Semimetallica uso racing
- Semi-metallic pad racing use only

CM55
- Sinterizzata stradale ant. uso sportivo
- Front sintered pad

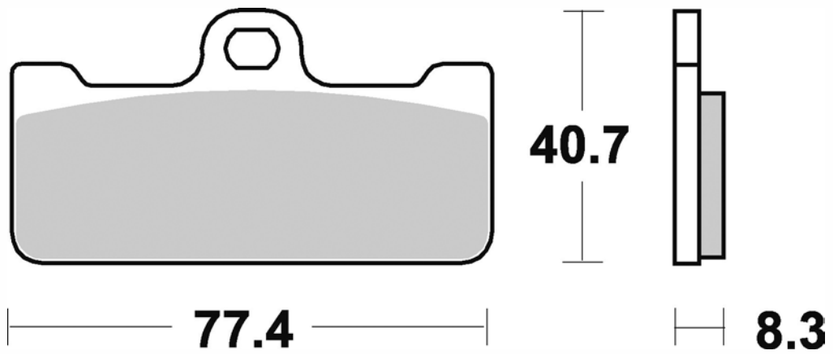

MODELLO MODEL	CC	ANNO YEAR	POSIZIONE POSITION
APRILIA			
GP	125	1995-2000	**FR**
RSV - GP	250	1997-2006	**FL/FR**

MODELLO MODEL	CC	ANNO YEAR	POSIZIONE POSITION
DUCATI			
916 RACING	926	1994-1997	**FL/FR**

777

CM55
- Sinterizzata stradale ant. uso sportivo
- Front sintered pad

P30
- Sinterizzata scooter
- Scooter sintered pad

SM1
- Semimetallica polivalente
- Semi-metallic pad

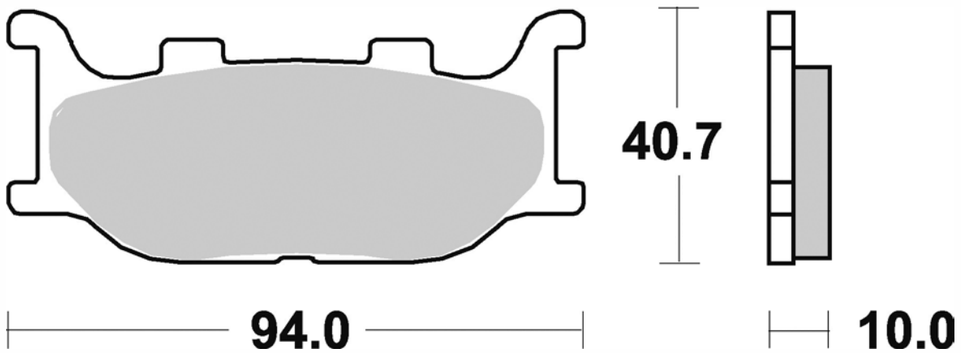

MODELLO MODEL	CC	ANNO YEAR	POSIZIONE POSITION
ITALJET			
JUPITER	250	2001-2006	**FL**
MBK			
SKYLINER	250	2000-2003	**FR**
SKYLINER ABS	250	2003	**FR**
SKYLINER	400	2004	**FL**
MZ			
1000 S	1000	2001-2002	**R**
YAMAHA			
SR	125	1997-2002	**FL**
TZR	125	1993	**FL**
XV VIRAGO (Rear Drum Model)	125	1997-2001	**FL**
XVS DRAG STAR (Rear Drum Model)	125	1999-2004	**FR**
XV VIRAGO	250	1995-2007	**FL**
XVS DRAG STAR	250	2001	**FR**
YP MAJESTY (Rear Drum Model)	250	1996-1997	**FR**

MODELLO MODEL	CC	ANNO YEAR	POSIZIONE POSITION
YP MAJESTY DX	250	1998-1999	**FR**
YP MAJESTY DX/ABS	250	1999-2005	**FR**
YP MAJESTY	400	2005-2013	**FL/FR**
YP MAJESTY ABS	400	2007-2013	**FL/FR**
XP T-MAX	500	2004-2007	**FL/FR**
FZ6	600	2004-2008	**FL/FR**
FZ6 Fazer	600	2004-2008	**FL/FR**
FZ6R	600	2009	**FL/FR**
XJ N	600	1998-2003	**FL/FR**
XJ S DIVERSION	600	1998-2003	**FL**
XJ6	600	2009-2011	**FL/FR**
XJ6 DIVERSION	600	2009-2011	**FL/FR**
MT03	660	2006-2011	**FL/FR**
XVS DRAG STAR	1100	1999-2006	**FL/FR**
XVS MIDNIGHT STAR	1300	2007-2011	**FL/FR**

778

SM1
- Semimetallica polivalente
- Semi-metallic pad

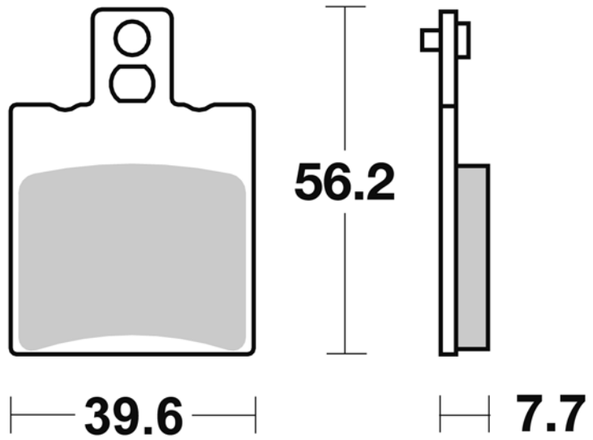

MODELLO MODEL	CC	ANNO YEAR	POSIZIONE POSITION
APRILIA			
SR AC LC	50	1994-2000	**FL**
SR DITECH	50	2001-2006	**FL**
SR R FACTORY	50	2005-2006	**FL**
SR WWW	50	1997	**FL**
LEONARDO	125	1997-1998	**FL**

MODELLO MODEL	CC	ANNO YEAR	POSIZIONE POSITION
BENELLI			
ADIVA	150	2000	**FL**
SUZUKI			
KATANA	50	1997-1999	**FL**
ZILLION	50	1999	**FL**

779

SM1
- Semimetallica polivalente
- Semi-metallic pad

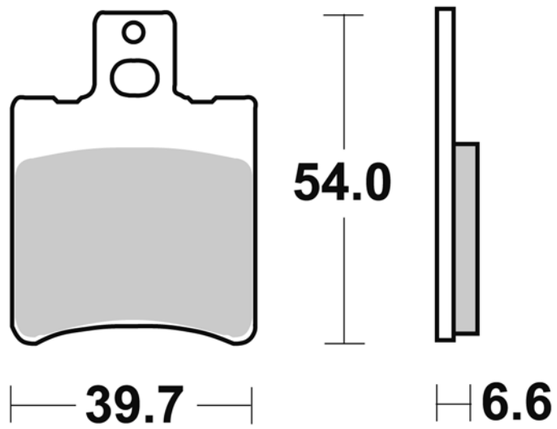

MODELLO MODEL	CC	ANNO YEAR	POSIZIONE POSITION
APRILIA			
RS REPLICA	250	1995-2003	**R**
CAGIVA			
CUCCIOLO	125	1999	**FL**
MBK			
NITRO	50	1997-2010	**FL**

MODELLO MODEL	CC	ANNO YEAR	POSIZIONE POSITION
PIAGGIO			
FREE	50	2002	**FL**
SUZUKI			
AP	50	1994-1999	**FL**
YAMAHA			
JOG Z	50	1991	**FL**

Le immagini hanno il solo scopo di presentare i prodotti.
The images used are aimed at presenting the products only.

FL > pastiglia anteriore sinistra / front left pad
FR > pastiglia anteriore destra / front right pad
R > pastiglia posteriore / rear pad

780

CM55
- Sinterizzata stradale ant. uso sportivo
- Front sintered pad

SM1
- Semimetallica polivalente
- Semi-metallic pad

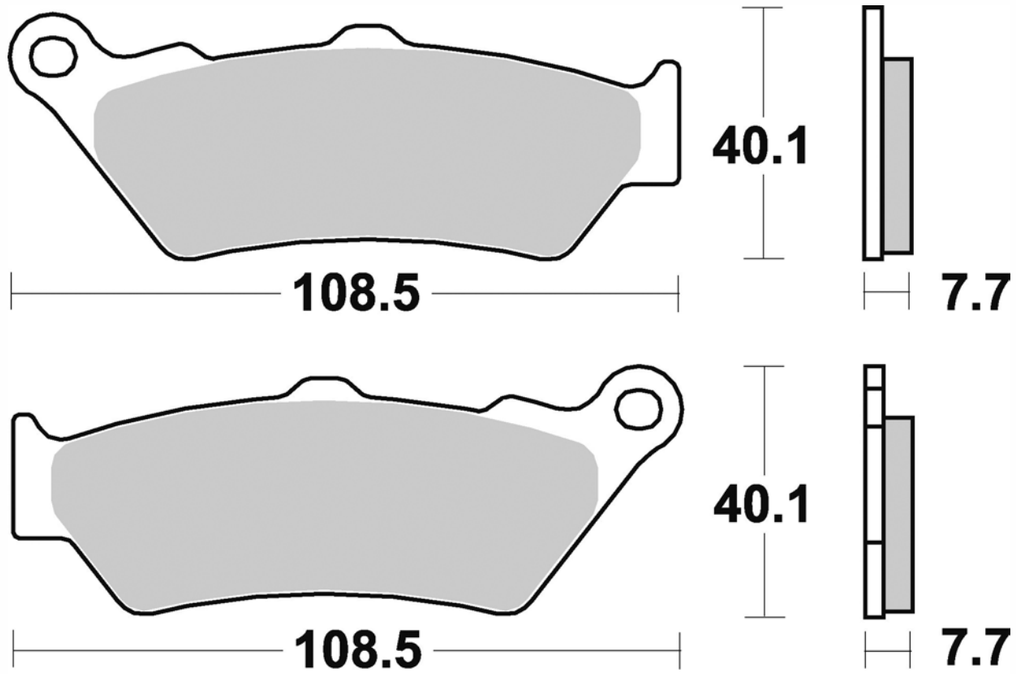

MODELLO MODEL	CC	ANNO YEAR	POSIZIONE POSITION
APRILIA			
MOTO 6.5	650	1995-2002	FL
PEGASO	650	1997-2000	FL
PEGASO I.E.	650	2001-2004	FL
PEGASO TRAIL	650	2005-2008	FL
ETV Capo Nord	1000	2001-2007	FL/FR
ETV CAPO NORD ABS	1000	2001-2007	FL/FR
BMW			
C1 scooter	125	2000	FL
C1 scooter	200	2002	FL
F 650	650	1994-2001	FL
F 650 CS	650	2002-2007	FL
F 650 GS	650	2001-2007	FL
F 650 GS ABS	650	2001-2007	FL
F 650 GS DAKAR	650	1999-2007	FL
F 650 ST	650	1997-2001	FL
G 650 GS	650	2009-2014	FL
G 650 GS SERTAO	650	2012-2014	FL
G 650 X CHALLENGE	650	2007-2009	FL
G 650 X COUNTRY	650	2007-2009	FL
F 650 GS	800	2008-2012	FR
F 650 GS ABS	800	2008-2011	FR
F 700 GS	800	2013-2014	FL/FR
F 800 GS	800	2009-2014	FL/FR
F 800 GS ADVENTURE	800	2013-2014	FL/FR
HP2	1200	2006-2009	FL
R 1200 GS	1200	2013-2014	R
R 1200 GS - ABS	1200	2013-2014	R
R 1200 GS ADVENTURE	1200	2014	R
R 1200 RT	1200	2014	R
K 1600 GT	1600	2011-2014	R
K 1600 GTL	1600	2011-2014	R
CAGIVA			
ELEFANT	750	1994-1995	FL
DUCATI			
GT	1000	2006-2010	FL/FR
GT TOURING	1000	2009	FL/FR
PAUL SMART LE	1000	2006-2007	FL/FR
SPORT	1000	2006-2008	FL/FR
SPORT S	1000	2007-2009	FL/FR

MODELLO MODEL	CC	ANNO YEAR	POSIZIONE POSITION
DIAVEL	1200	2011-2013	R
DIAVEL AMG	1200	2013	R
DIAVEL CARBON	1200	2011-2012	R
DIAVEL STRADA	1200	2014	R
HONDA			
CB	500	1997-2003	FR
FX VIGOR	650	1999-2003	FL
NTV DEAUVILLE	650	1998-2001	FL/FR
NX DOMINATOR	650	1997-2004	FL
NX DOMINATOR 34 HP	650	1997-2002	FL
SLR	650	1996-1999	FL
HUSQVARNA			
TR 650 STRADA	650	2013-2014	FL
TR 650 TERRA	650	2013-2014	FL
KTM			
LC4 ADVENTURE	640	2004-2007	FL/FR
ENDURO	690	2008-2010	FL
ENDURO R	690	2008-2014	FL
LC8 ADVENTURE	950	2002-2006	FL/FR
LC8 ADVENTURE S	950	2004-2006	FL/FR
SUPER ENDURO R	950	2006-2008	FL
LC8 ADVENTURE ABS	990	2006-2012	FL/FR
LC8 ADVENTURE R	990	2010-2012	FL/FR
LC8 ADVENTURE S	990	2006-2008	FL/FR
MORINI			
GRANPASSO	1200	2008-2009	FL/FR
MOTO GUZZI			
QUOTA IE	1000	1995-1997	FL/FR
CALIFORNIA EV SPECIAL	1100	1997-2003	R
CALIFORNIA JACKAL	1100	2001-2006	R
QUOTA ES	1100	1999	FL/FR
TRIUMPH			
THUNDERBIRD	1600	2009-2014	R
THUNDERBIRD COMMANDER	1700	2014	R
THUNDERBIRD LT	1700	2014	R
THUNDERBIRD STORM	1700	2011-2014	R
ROCKET III	2300	2004-2007	R
YAMAHA			
DT X	125	2005-2006	FL
DT X SM	125	2005	FL
XT R	660	2004-2014	FL

782

CM55
- Sinterizzata stradale ant. uso sportivo
- Front sintered pad

SM1
- Semimetallica polivalente
- Semi-metallic pad

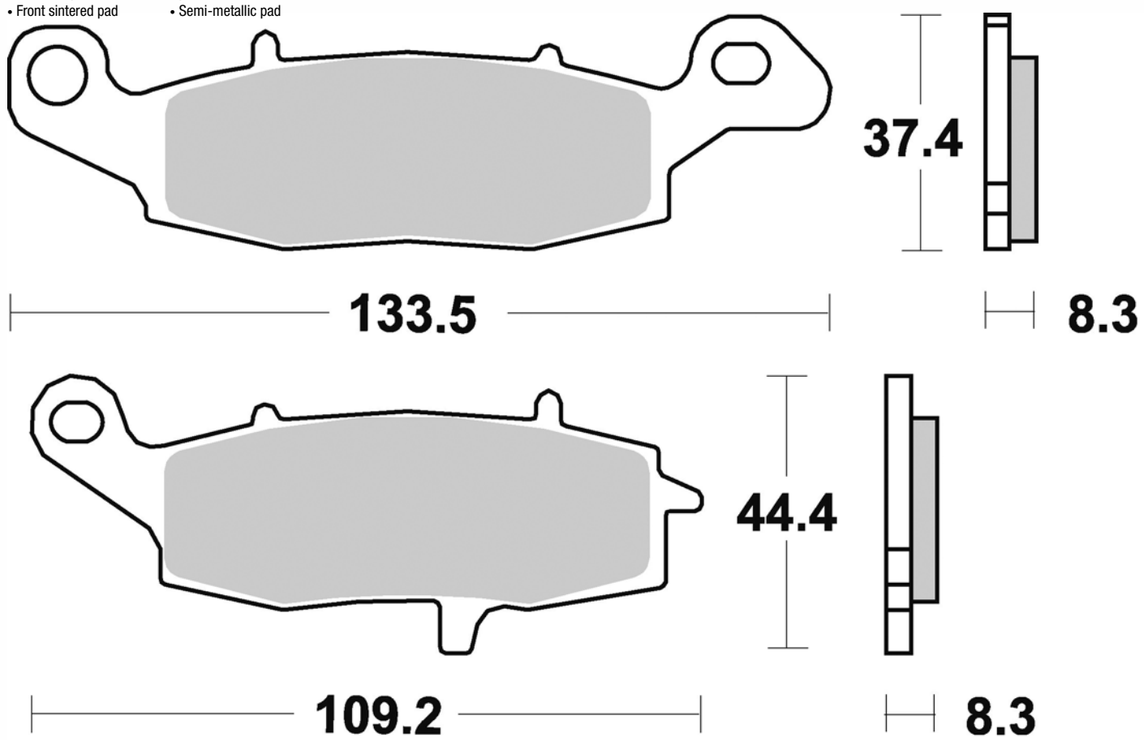

MODELLO MODEL	CC	ANNO YEAR	POSIZIONE POSITION
KAWASAKI			
VN ELIMINATOR	250	1999	FL
ER5	500	2001-2006	FL
ER6F	650	2006-2014	FL
ER6F ABS	650	2006-2013	FL
ER6N	650	2006-2014	FL
ER6N ABS	650	2006-2014	FL
KLR	650	1995-2007	FL
VERSYS	650	2007-2014	FL
VERSYS ABS	650	2007-2014	FL
Z 750	750	2004-2006	FL
Z 750 S	750	2005-2006	FL
ZR7	750	1999-2003	FL
ZR7S	750	2001-2003	FL
VN	800	1999-2000	FL
VN	800	1999	FL
VN	800	2000-2001	FL
VN	800	2001-2002	FL
VN	800	2002-2003	FL
VN	800	2003-2004	FL
VN	800	2004-2005	FL
VN	800	2005-2006	FL
VN	800	2006	FL
VN CLASSIC	900	2006-2014	FL
VN CUSTOM	900	2007-2011	FL
KLV	1000	2004-2007	FL
GPZ	1100	1995-1998	FL
ZEPHYR	1100	1996-1998	FL
VN CLASSIC	1500	1996-2007	FR
VN CLASSIC TOURER	1500	1998	FL

MODELLO MODEL	CC	ANNO YEAR	POSIZIONE POSITION
VN DRIFTER	1500	1999-2002	FR
VN VULCAN NOMAD	1500	1998-2001	FL
VN CLASSIC	1600	2003-2007	FL
VN CLASSIC TOURER	1600	2005-2006	FL
VN CLASSIC	1700	2009	FL
VN CLASSIC ABS	1700	2010-2014	FL
VN CLASSIC TOURER	1700	2009	FL
VN CLASSIC TOURER ABS	1700	2010-2014	FL
SUZUKI			
GSF BANDIT	400	1994-1996	FL/FR
GSF BANDIT	600	2000-2004	FL
GSX F	600	1998-2006	FL
DL V-STROM	650	2004-2012	FL
DL V-STROM ABS	650	2007-2014	FL
GLADIUS	650	2009-2014	FL
GLADIUS ABS	650	2009-2014	FL
GSF BANDIT	650	2005-2006	FL
SV	650	1999-2010	FL
SV ABS	650	2007-2010	FL
SV S	650	1999-2009	FL
SV S ABS	650	2007-2009	FL
GSR	750	2011-2014	FL
GSR ABS	750	2011-2014	FL
GSX	750	1997-2003	FL
GSX F	750	1998-2006	FL
VX	800	1994	FL
DL V-STROM	1000	2002-2010	FL
GSX G	1100	1995	FL
BOULEVARD	1500	2005-2006	FL
C INTRUDER	1500	2005-2009	FL
VL INTRUDER LC	1500	2002-2004	FL

Le immagini hanno il solo scopo di presentare i prodotti.
The images used are aimed at presenting the products only.

FL > pastiglia anteriore sinistra / front left pad
FR > pastiglia anteriore destra / front right pad
R > pastiglia posteriore / rear pad

784

CM66
- Semimetallica uso racing
- Semi-metallic pad racing use only

CM55
- Sinterizzata stradale ant. uso sportivo
- Front sintered pad

SM1
- Semimetallica polivalente
- Semi-metallic pad

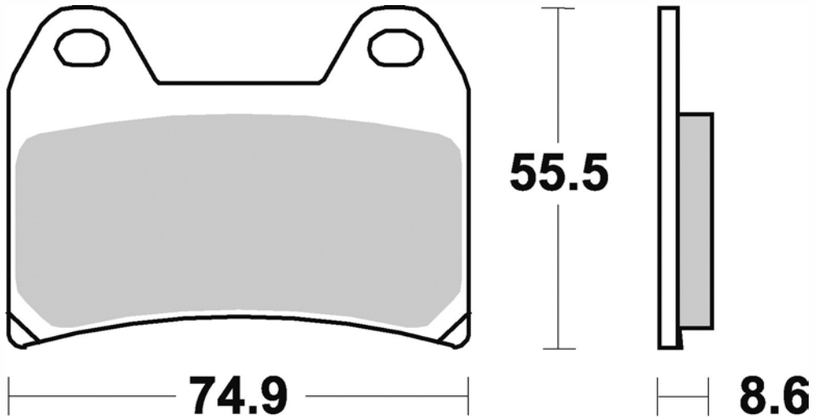

MODELLO MODEL	CC	ANNO YEAR	POSIZIONE POSITION
APRILIA			
RS PISTA	250	2004	FL/FR
RS REPLICA	250	1998-2003	FL/FR
PEGASO STRADA	650	2005-2009	FL
DORSODURO FACTORY	750	2010-2011	FL/FR
RST Futura	1000	2001-2004	FL/FR
RSV	1000	1998-2000	FL/FR
RSV R	1000	2000	FL/FR
RSV SP	1000	1999-2000	FL/FR
SL 1000 FALCO	1000	2000-2004	FL/FR
TUONO FIGHTER	1000	2002-2005	FL/FR
TUONO R (2 pads per caliper)	1000	2003-2009	FL/FR
TUONO V4 R	1000	2011-2013	FL/FR
TUONO V4 R APRC	1000	2011-2013	FL/FR
DORSODURO	1200	2011-2013	FL/FR
DORSODURO ABS	1200	2011-2012	FL/FR
BENELLI			
TORNADO TRE	900	2001-2002	FL/FR
TNT	1130	2004-2006	FL/FR
TRE K	1130	2007	FL/FR
BIMOTA			
DB4 I.E.	904	2000-2001	FL/FR
SB8K GOBERT	1000	2006	FL/FR
SB8R	1000	1997-2000	FL/FR
BMW			
G 650 X Moto	650	2007-2009	FL
F 800 GT	800	2013-2014	FL/FR
F 800 R	800	2009-2014	FL/FR
F 800 S	800	2006-2010	FL/FR
F 800 ST	800	2006-2012	FL/FR
CAGIVA			
RAPTOR	650	2001-2007	FL/FR
V-RAPTOR	650	2001-2005	FL/FR
RAPTOR	1000	2000-2006	FL/FR
V-RAPTOR	1000	2000-2006	FL/FR
XTRA-RAPTOR	1000	2002-2004	FL/FR
DUCATI			
MONSTER	400	2001-2006	FL
MONSTER	600	2000-2002	FL
MONSTER	620	2002-2005	FL/FR
MONSTER single disk	620	2005-2006	FL
MULTISTRADA single disk	620	2005-2006	FL
SPORT	620	2003-2004	FL/FR
SS SUPERSPORT	620	2002-2005	FL/FR
MONSTER	696	2008-2014	FL/FR
MONSTER ABS	696	2010-2014	FL/FR
748 BIPOSTO	748	1998-2002	FL/FR
748 R	748	2000	FL/FR
748 S	748	1999-2002	FL/FR
748 SPS	748	1998-1999	FL/FR
MONSTER	750	2000-2002	FL/FR

MODELLO MODEL	CC	ANNO YEAR	POSIZIONE POSITION
SPORT	750	2000-2002	FL/FR
SS SUPERSPORT	750	2000-2002	FL/FR
HYPERMOTARD 796	800	2010-2012	FL/FR
MONSTER	800	2003-2004	FL/FR
MONSTER 796	800	2011-2014	FL/FR
MONSTER 796 ABS	800	2011-2014	FL/FR
SPORT	800	2003-2004	FL/FR
SS SUPERSPORT	800	2003-2005	FL/FR
848	850	2008-2010	FL/FR
STREETFIGHTER	850	2012-2014	FL/FR
MONSTER	900	2000-2004	FL/FR
SPORT	900	2002	FL/FR
SS SUPERSPORT	900	1998-2002	FL/FR
916 SPS	916	1997-1998	FL/FR
MONSTER S4	916	2001-2003	FL/FR
ST4	916	1998-2004	FL/FR
ST2	944	1997-2003	FL/FR
996 BIPOSTO	996	1999-2001	FL/FR
996 S	996	2001	FL/FR
996 SPS	996	1999-2000	FL/FR
MONSTER S4R	996	2003-2006	FL/FR
ST4 S	996	2001-2005	FL/FR
ST4 S ABS	996	2003-2006	FL/FR
998 BIPOSTO	998	2002-2003	FL/FR
998 S (two pads)	998	2002-2003	FL/FR
MONSTER	1000	2003-2005	FL/FR
MONSTER S	1000	2003-2005	FL/FR
MONSTER S2R	1000	2006-2007	FL/FR
MULTISTRADA DS	1000	2003-2006	FL/FR
MULTISTRADA DS S	1000	2005-2006	FL/FR
SS SUPERSPORT	1000	2003-2006	FL/FR
ST3	1000	2004-2006	FL/FR
ST3 S ABS	1000	2006-2007	FL/FR
HYPERMOTARD	1100	2007-2009	FL/FR
HYPERMOTARD EVO	1100	2010-2012	FL/FR
MONSTER 1100	1100	2009-2010	FL/FR
MONSTER 1100 ABS	1100	2010	FL/FR
MONSTER 1100 S	1100	2009-2010	FL/FR
MONSTER 1100 S ABS	1100	2010	FL/FR
MONSTER DIESEL	1100	2013	FL/FR
MONSTER EVO	1100	2011-2012	FL/FR
MONSTER EVO ABS	1100	2011-2013	FL/FR
MULTISTRADA DS	1100	2007-2009	FL/FR
MULTISTRADA DS S	1100	2007-2009	FL/FR
MULTISTRADA	1200	2010-2012	FL/FR
MULTISTRADA ABS	1200	2010-2014	FL/FR
MULTISTRADA S ABS	1200	2010-2012	FL/FR
MULTISTRADA S ABS PIKES PEAK	1200	2012-2014	FL/FR
MULTISTRADA S GT	1200	2012-2013	FL/FR
MULTISTRADA S SPORT	1200	2011-2012	FL/FR
MULTISTRADA S TOURING	1200	2010-2014	FL/FR

MODELLO MODEL	CC	ANNO YEAR	POSIZIONE POSITION
MULTISTRADA TOURING ABS	1200	2010-2011	FL/FR
HUSQVARNA			
NOX	570	2001-2003	FL
TE 610 E SUPERMOTARD	600	1998	FL
SM S	610	2000-2004	FL
SMR	630	2004-2005	FL
NUDA	900	2012-2013	FL/FR
KTM			
SMC	625	2005-2008	FL
SMR	630	2004-2005	FL
DUKE II	640	1999-2006	FL
LC4 SUPERMOTO	640	2004-2007	FL
SMC	660	2004-2007	FL
DUKE	690	2012-2014	FL
SUPERMOTO	690	2007-2008	FL
ADVENTURE	1190	2013-2014	FL/FR
ADVENTURE R	1190	2013-2014	FL/FR
MORINI			
9 1/2	1200	2006-2010	FL/FR
CORSARO	1200	2005-2009	FL/FR
SCRAMBLER	1200	2008-2009	FL/FR
MOTO GUZZI			
BREVA	750	2003-2007	FL
NEVADA	750	2003-2007	FL
V7 CLASSIC	750	2008-2013	FL
V7 RACER	750	2010-2013	FL
V7 SPECIAL	750	2012-2013	FL
V7 STONE	750	2012-2013	FL
BREVA	850	2006-2008	FL/FR
GRISO	850	2006	FL/FR
NORGE T-GTL	850	2007	FL/FR
NORGE T-GTL ABS	850	2007	FL/FR
940C	940	2007	FL/FR
BREVA	1100	2005-2007	FL/FR
BREVA ABS	1100	2005-2007	FL/FR
CALIFORNIA EV SPECIAL	1100	1997-2003	FL/FR
CALIFORNIA JACKAL	1100	2001-2006	FR
GRISO	1100	2005-2008	FL/FR

MODELLO MODEL	CC	ANNO YEAR	POSIZIONE POSITION
V11 LE MANS	1100	2000-2005	FL/FR
V11 SPORT	1100	1997-2000	FL/FR
BREVA	1200	2008-2009	FL/FR
BREVA ABS	1200	2008-2009	FL/FR
GRISO 8 V	1200	2007-2013	FL/FR
NORGE T-GTL	1200	2006	FL/FR
NORGE T-GTL ABS	1200	2006-2009	FL/FR
SPORT	1200	2006-2007	FL/FR
SPORT 8V ABS	1200	2008-2010	FL/FR
SPORT ABS	1200	2006-2007	FL/FR
STELVIO	1200	2008-2009	FL/FR
MV AGUSTA			
BRUTALE	675	2012-2014	FL/FR
F3	675	2012-2014	FL/FR
BRUTALE	800	2013-2014	FL/FR
BRUTALE	920	2010-2012	FL/FR
BRUTALE	989	2008-2009	FL/FR
BRUTALE R	990	2010-2011	FL/FR
BRUTALE	1090	2013	FL/FR
BRUTALE R	1090	2012-2013	FL/FR
MZ			
1000 S	1000	2001-2002	FL/FR
SUZUKI			
GSX	1200	1999-2003	FL/FR
VOR			
SM	503	2000-2002	FL
SM RC	530	2000-2002	FL
VOXAN			
BLACK MAGIC	995	2006	FL/FR
CAFE RACER	995	2000-2006	FL/FR
ROADSTER	995	2001-2006	FL/FR
YAMAHA			
XJR	400	1995-2000	FL/FR
XT X	660	2004-2014	FL
XT X	660	2014	FL
TRX	850	1995-2000	FL/FR
XJR	1200	1997	FL/FR
XJR	1300	1998	FL/FR

Le immagini hanno il solo scopo di presentare i prodotti.
The images used are aimed at presenting the products only.

FL > pastiglia anteriore sinistra / front left pad
FR > pastiglia anteriore destra / front right pad
R > pastiglia posteriore / rear pad

785

SM1
- Semimetallica polivalente
- Semi-metallic pad

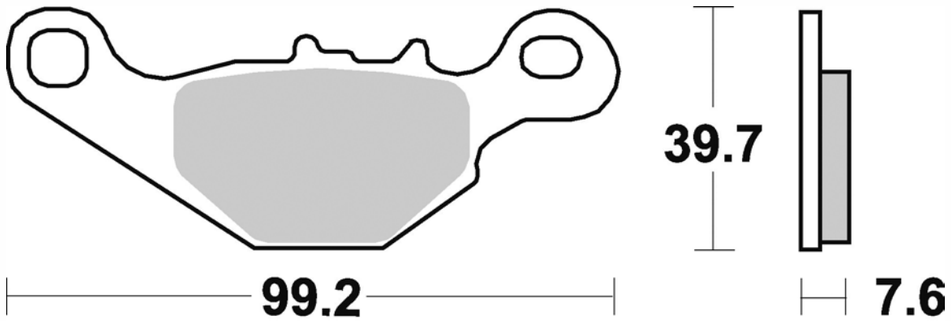

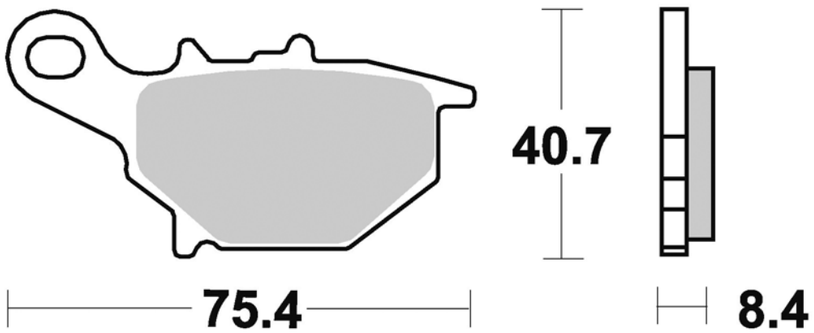

MODELLO MODEL	CC	ANNO YEAR	POSIZIONE POSITION
SUZUKI			
AN	50	1995	**FL**
TR STREET MAGIC	50	1998	**FL**
RM	80	1996-2001	**FL**
RM	85	2002-2004	**FL**
AN	125	1994	**FL**
DR Z L (Rear Drum Model)	125	2003-2013	**FL**

MODELLO MODEL	CC	ANNO YEAR	POSIZIONE POSITION
UC EPICURO	125	1999-2003	**FL**
VECSTAR	125	1994	**FL**
AN	150	1995	**FL**
UC EPICURO	150	1999-2000	**FL**
UC EPICURO	150	1999	**FL**
UC EPICURO	150	2000-2001	**FL**
UC EPICURO	150	2001-2002	**FL**

786

P1R
- Sinterizzata racing
- Sintered pad racing use only

CM66
- Semimetallica uso racing
- Semi-metallic pad racing use only

CM55
- Sinterizzata stradale ant. uso sportivo
- Front sintered pad

P30
- Sinterizzata scooter
- Scooter sintered pad

SM1
- Semimetallica polivalente
- Semi-metallic pad

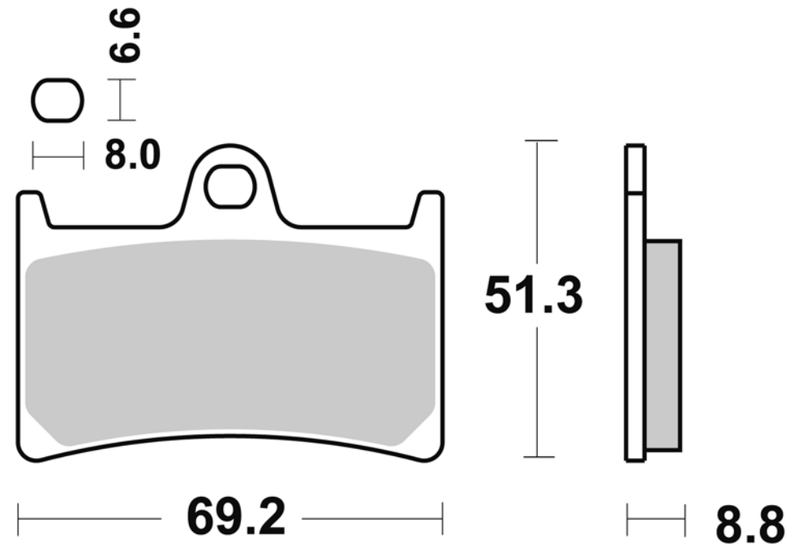

MODELLO MODEL	CC	ANNO YEAR	POSIZIONE POSITION
YAMAHA			
TZR	125	1994	**FL**
XP T-MAX	500	2008-2011	**FL/FR**
XP T-MAX ABS	500	2008-2011	**FL/FR**
XP T-MAX	530	2012-2014	**FL/FR**
XP T-MAX ABS	530	2012-2014	**FL/FR**
FZ6 FAZER S2	600	2007-2008	**FL/FR**
FZ6 S2	600	2007-2008	**FL/FR**
FZS FAZER	600	1998-2003	**FL/FR**
YZF R THUNDERCAT	600	1996-2004	**FL/FR**
YZF R6	600	1999-2014	**FL/FR**
MT-07	700	2014	**FL/FR**
YZF R7	750	1999-2001	**FL/FR**
FAZER 8	800	2010-2012	**FL/FR**
FZ8	800	2010-2013	**FL/FR**
MT-09	850	2014	**FL/FR**
MT-09 ABS	850	2014	**FL/FR**
MT-09 STREET RALLY	850	2014	**FL/FR**

MODELLO MODEL	CC	ANNO YEAR	POSIZIONE POSITION
TDM	900	2002-2014	**FL/FR**
FZ1	1000	2006-2014	**FL/FR**
FZ1 FAZER	1000	2006-2012	**FL/FR**
FZ1 FAZER ABS	1000	2007-2012	**FL/FR**
FZS FAZER	1000	2001-2005	**FL/FR**
YZF R THUNDERACE	1000	1996-1998	**FL/FR**
YZF R1	1000	1998-2006	**FL/FR**
YZF R1 SP	1000	2006	**FL/FR**
BT BULLDOG	1100	2002-2006	**FL/FR**
XT Z SUPER TENERE	1200	2010-2014	**FL/FR**
XT ZE SUPER TENERE	1200	2014	**FL/FR**
FJR	1300	2001-2004	**FL/FR**
FJR ABS	1300	2003-2005	**FL/FR**
XJR	1300	1999-2013	**FL/FR**
MT01	1670	2005-2006	**FL/FR**
XV PC ROAD STAR WARRIOR	1700	2002-2007	**FL/FR**
XV A MIDNIGHT STAR	1900	2006-2012	**FL/FR**

Le immagini hanno il solo scopo di presentare i prodotti.
The images used are aimed at presenting the products only.

FL > pastiglia anteriore sinistra / front left pad
FR > pastiglia anteriore destra / front right pad
R > pastiglia posteriore / rear pad

787

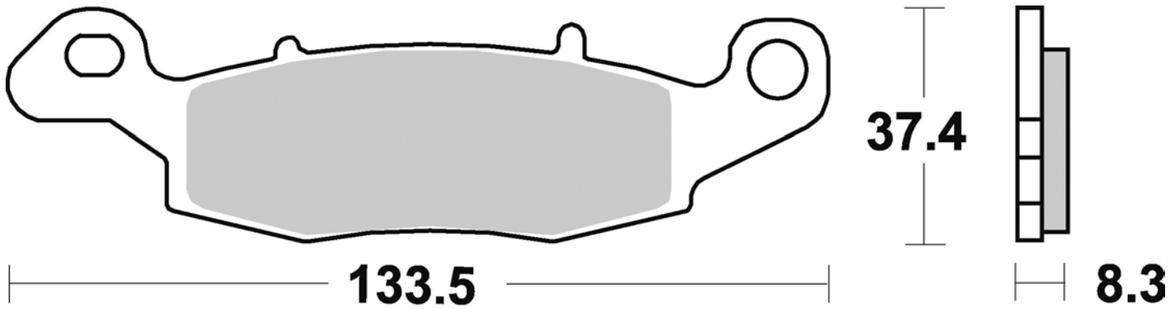

CM55
- Sinterizzata stradale ant. uso sportivo
- Front sintered pad

SM1
- Semimetallica polivalente
- Semi-metallic pad

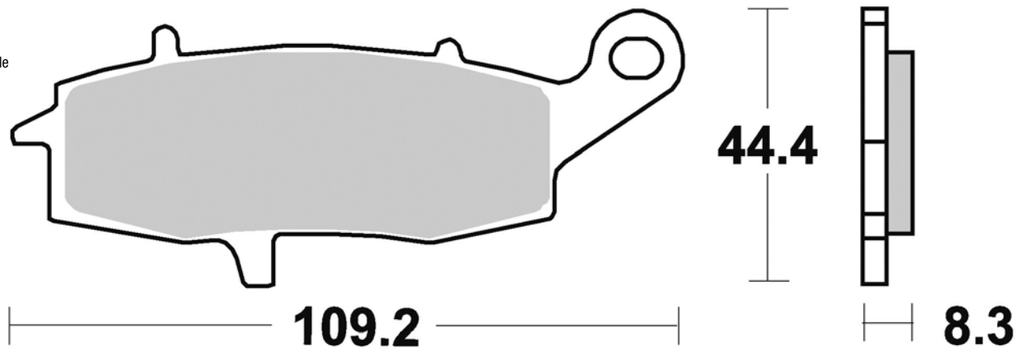

MODELLO MODEL	CC	ANNO YEAR	POSIZIONE POSITION
KAWASAKI			
ER6F	650	2006-2014	**FR**
ER6F ABS	650	2006-2013	**FR**
ER6N	650	2006-2014	**FR**
ER6N ABS	650	2006-2014	**FR**
VERSYS	650	2007-2014	**FR**
VERSYS ABS	650	2007-2014	**FR**
W 650 (Rear Drum Model)	650	1999-2006	**FL**
Z 750	750	2004-2006	**FR**
Z 750 S	750	2005-2006	**FR**
ZR7	750	1999-2003	**FR**
ZR7	750	1999-2003	**R**
ZR7S	750	2001-2003	**FR**
ZR7S	750	2001-2003	**R**
W800	800	2011-2014	**FR**
VN CLASSIC	900	2006-2014	**R**
VN CUSTOM	900	2007-2011	**R**
KLV	1000	2004-2007	**FR**
GPZ	1100	1995-1998	**FR**
ZEPHYR	1100	1996-1998	**FR**
VN CLASSIC TOURER	1500	1998	**FR**
VN DRIFTER	1500	1999-2002	**R**
VN MEAN STREAK	1500	2002-2003	**R**
VN VULCAN NOMAD	1500	1998-2001	**FR**
VN CLASSIC	1600	2003-2007	**FR**
VN CLASSIC	1600	2003-2007	**R**
VN CLASSIC	1600	2003-2007	**R**
VN CLASSIC TOURER	1600	2005-2006	**R**
VN MEAN STREAK	1600	2004-2007	**R**
VN CLASSIC	1700	2009	**FR**
VN CLASSIC	1700	2009	**R**
VN CLASSIC ABS	1700	2010-2014	**FR**
VN CLASSIC ABS	1700	2010-2014	**R**
VN CLASSIC TOURER	1700	2009	**FR**
VN CLASSIC TOURER	1700	2009	**R**
VN CLASSIC TOURER ABS	1700	2010-2014	**FR**
VN CLASSIC TOURER ABS	1700	2010-2014	**R**
VN VOYAGER ABS	1700	2009-2014	**R**

MODELLO MODEL	CC	ANNO YEAR	POSIZIONE POSITION
VN VOYAGER CUSTOM ABS	1700	2011-2014	**R**
VN	2000	2004-2007	**R**
VN CLASSIC	2000	2008-2010	**R**
SUZUKI			
RV VAN VAN	125	2003-2010	**FR**
GS E	500	1995-2005	**FR**
GS F	500	2004-2007	**FR**
GSF BANDIT	600	2000-2004	**FR**
GSX F	600	1998-2006	**FR**
DL V-STROM	650	2004-2012	**FR**
DL V-STROM ABS	650	2007-2014	**FR**
GLADIUS	650	2009-2014	**FR**
GLADIUS ABS	650	2009-2014	**FR**
GSF BANDIT	650	2005-2006	**FR**
SV	650	1999-2010	**FR**
SV ABS	650	2007-2010	**FR**
SV S	650	1999-2009	**FR**
SV S ABS	650	2007-2009	**FR**
XF FREEWIND	650	1997-2002	**FL**
GSR	750	2011-2014	**FR**
GSR ABS	750	2011-2014	**FR**
GSX	750	1997-2003	**FR**
GSX F	750	1998-2006	**FR**
BOULEVARD	800	2005-2007	**FL**
C INTRUDER	800	2005	**FL**
M INTRUDER	800	2005-2014	**FL**
M INTRUDER T	800	2014	**FL**
VL LC INTRUDER VOLUSIA	800	2001-2005	**FR**
VZ MARAUDER	800	1996-2004	**FR**
DL V-STROM	1000	2002-2010	**FR**
GSX G	1100	1995	**FR**
BOULEVARD	1500	2005-2006	**FR**
C INTRUDER	1500	2005-2009	**FR**
VL INTRUDER LC	1500	2002-2004	**FR**
BOULEVARD	1600	2005-2006	**R**
M INTRUDER	1600	2005-2006	**R**
VZ MARAUDER	1600	2004-2006	**R**
VLR INTRUDER C	1800	2008-2011	**R**
VZR INTRUDER M	1800	2006-2012	**R**

794

CM56
- Sinterizzata stradale post. uso sportivo
- Rear sintered pad

SM1
- Semimetallica polivalente
- Semi-metallic pad

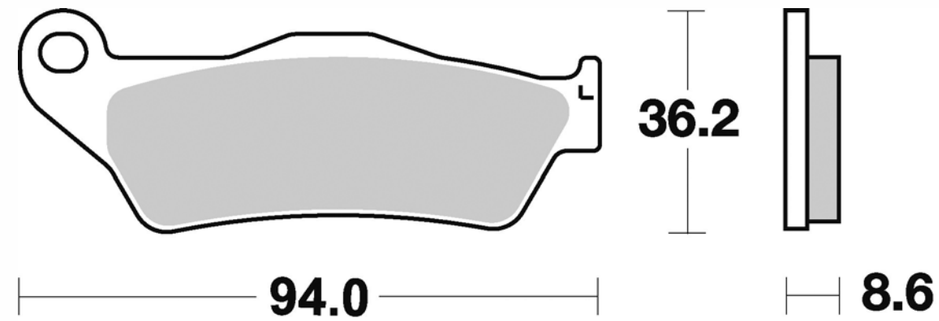

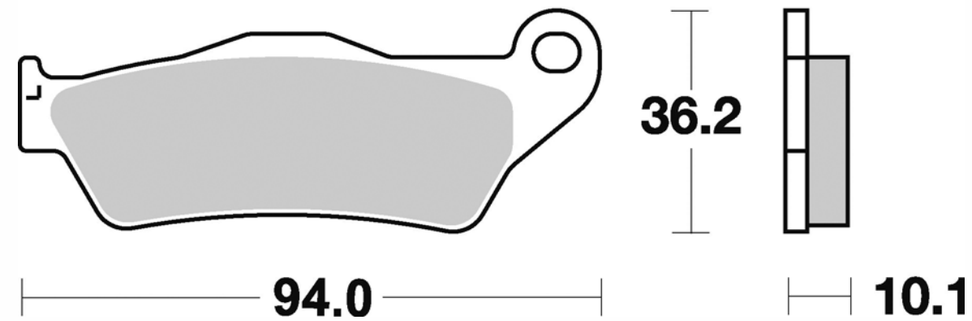

MODELLO MODEL	CC	ANNO YEAR	POSIZIONE POSITION
BMW			
R 850 C	850	1998-2001	**R**
R 850 C	850	1998-2001	**R**
R 850 GS	850	1998-2007	**R**
R 850 GS	850	1998-2007	**R**
R 850 R	850	1994-2007	**R**
R 850 R	850	1994-2007	**R**
R 850 RT	850	1995-2001	**R**
R 850 RT Integral ABS	850	2001-2004	**R**
R 850 RT Integral ABS	850	2001-2004	**R**
R 1100 GS	1100	1994-2001	**R**
R 1100 GS	1100	1994-2001	**R**
R 1100 R	1100	1995-2001	**R**
R 1100 R	1100	1995-2001	**R**
R 1100 RT	1100	1994-2001	**R**
R 1100 RT	1100	1994-2001	**R**
R 1100 RT ABS	1100	1994-2001	**R**
R 1100 S	1100	1998-2006	**R**
R 1100 S	1100	1998-2006	**R**
R 1100 S BOXER CUP REPLIKA	1100	2003-2006	**R**
R 1100 S BOXER CUP REPLIKA	1100	2003-2006	**R**
R 1150 GS	1150	1999-2001	**R**
R 1150 GS (Brembo caliper)	1150	2002-2004	**R**
R 1150 GS ADVENTURE	1150	2002-2005	**R**
R 1150 GS ADVENTURE	1150	2002-2005	**R**
R 1150 R	1150	2001-2006	**R**
R 1150 R	1150	2001-2006	**R**
R 1150 R ROCKSTER	1150	2003-2006	**R**
R 1150 R ROCKSTER	1150	2003-2006	**R**
R 1150 RS	1150	2001-2005	**R**
R 1150 RT	1150	2001-2005	**R**
R 1150 RT	1150	2001-2005	**R**
R 1150 RT ABS	1150	2001-2005	**R**
R 1150 RT ABS	1150	2001-2005	**R**
HP2	1200	2006-2009	**R**
HP2 Megamoto	1200	2007-2009	**R**
HP2 Megamoto	1200	2010	**R**
HP2 Megamoto	1200	2007-2010	**R**

MODELLO MODEL	CC	ANNO YEAR	POSIZIONE POSITION
HP2 SPORT	1200	2008-2009	**R**
HP2 SPORT	1200	2010-2011	**R**
HP2 SPORT	1200	2008-2011	**R**
K 1200 R	1200	2004-2008	**R**
K 1200 S / ABS	1200	2004-2007	**R**
R 1200 C	1200	1997-2001	**R**
R 1200 C CLASSIC	1200	2003	**R**
R 1200 GS	1200	2004-2007	**R**
R 1200 GS	1200	2008-2009	**R**
R 1200 GS	1200	2010-2011	**R**
R 1200 GS	1200	2012	**R**
R 1200 GS	1200	2004-2011	**R**
R 1200 GS - ABS	1200	2004-2007	**R**
R 1200 GS - ABS	1200	2008-2011	**R**
R 1200 GS - ABS	1200	2012	**R**
R 1200 GS - ABS	1200	2004-2011	**R**
R 1200 GS ADVENTURE	1200	2006-2007	**R**
R 1200 GS ADVENTURE	1200	2008-2013	**R**
R 1200 GS ADVENTURE	1200	2006-2013	**R**
R 1200 R	1200	2006-2013	**R**
R 1200 RT	1200	2005-2013	**R**
R 1200 RT	1200	2005-2011	**R**
R 1200 RT	1200	2012	**R**
R 1200 RT	1200	2013	**R**
R 1200 S	1200	2006-2008	**R**
R 1200 ST	1200	2005-2008	**R**
R NINE T	1200	2014	**R**
K 1300 GT	1300	2009	**R**
K 1300 GT	1300	2010	**R**
K 1300 GT	1300	2009-2010	**R**
K 1300 R - ABS	1300	2008	**R**
K 1300 R - ABS	1300	2009	**R**
K 1300 R - ABS	1300	2010-2014	**R**
K 1300 R - ABS	1300	2008-2014	**R**
K 1300 S	1300	2009	**R**
K 1300 S	1300	2010-2014	**R**
K 1300 S	1300	2009-2014	**R**

Le immagini hanno il solo scopo di presentare i prodotti.
The images used are aimed at presenting the products only.

FL > pastiglia anteriore sinistra / front left pad
FR > pastiglia anteriore destra / front right pad
R > pastiglia posteriore / rear pad

795

SM1
- Semimetallica polivalente
- Semi-metallic pad

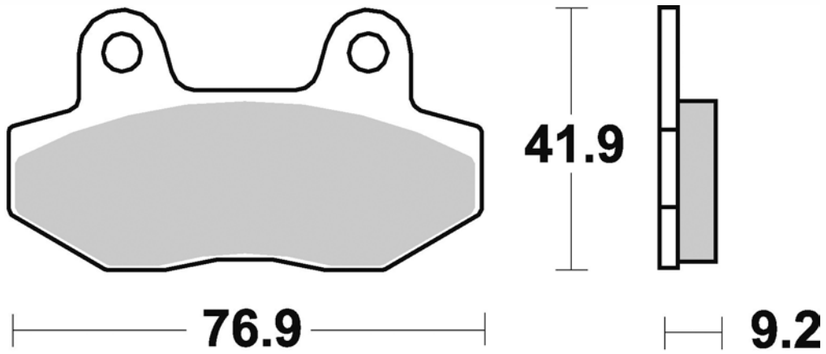

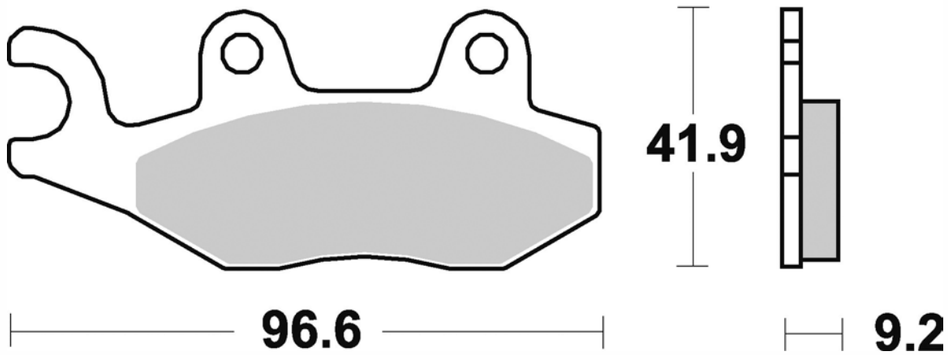

MODELLO MODEL	CC	ANNO YEAR	POSIZIONE POSITION
AEON			
ELITE	125	2012-2013	FL
MY	125	2012-2013	FL
URBAN	125	2011-2013	FL
ELITE i	200	2011	FL
ELITE i	350	2012-2013	FL
URBAN i	350	2011-2013	FL
HONDA			
CA REBEL (Rear Drum Model)	125	1995-1996	FR
CMX C REBEL (Nissin caliper - Rear Drum)	250	1996	FL
KYMCO			
AGILITY R10 (Rear Drum Model)	50	2006-2014	FL
AGILITY R12 (Rear Drum Model)	50	2005-2014	FL
AGILITY RS (Rear Drum Model)	50	2009-2012	FL
FILLY LX	50	2001-2002	FL
LIKE 2T (Rear Drum Model)	50	2010-2014	FL
LIKE 4T (Rear Drum Model)	50	2010-2014	FL
SENTO	50	2008-2009	FL
VITALITY 2T	50	2004-2009	FL
VITALITY 4T	50	2004-2009	FL
YUP	50	2002-2009	FL
AGILITY R12 (Rear Drum Model)	125	2005-2010	FL
AGILITY RS (Rear Drum Model)	125	2011-2012	FL

MODELLO MODEL	CC	ANNO YEAR	POSIZIONE POSITION
LIKE	125	2010-2012	FL
LIKE LX	125	2012	FL
MOVIE	125	1999-2000	FL
STRIKER	125	1999-2006	FL
VIVIO	125	1999-2003	FL
STRYKER	150	2000-2006	FL
VIVIO	150	2000-2003	FL
LIKE	200	2010-2014	FL
MALAGUTI			
BLOG	125	2009-2011	FL
CENTRO	125	2007-2011	FL
BLOG	160	2009-2011	FL
CENTRO	160	2007-2011	FL
PEUGEOT			
SATELIS (Nissin caliper)	250	2007-2011	FL
SATELIS (Nissin caliper)	250	2007-2011	R
GEOPOLIS	300	2013	FL
GEOPOLIS	300	2013	R
SATELIS	400	2008-2011	R
GEOPOLIS	500	2008-2012	R
SATELIS	500	2007-2012	R
SACHS			
4 ROCK	250	2004-2006	R

796

SM1
- Semimetallica polivalente
- Semi-metallic pad

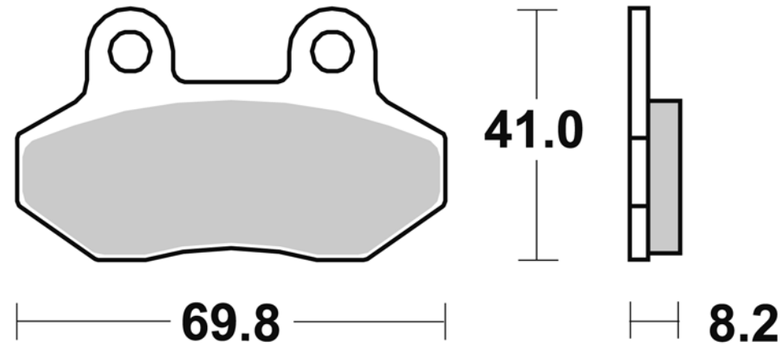

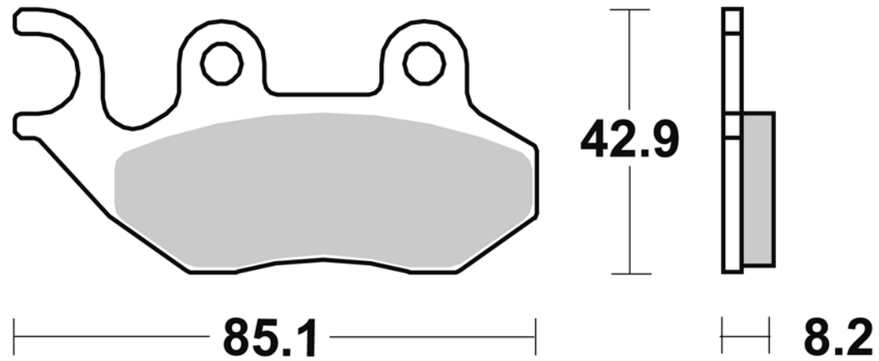

MODELLO MODEL	CC	ANNO YEAR	POSIZIONE POSITION
CAGIVA			
PASSING	125	1994	FL
PEUGEOT			
TWEET (Rear Drum Model)	50	2010-2013	FL
TWEET RS	50	2010-2013	FL
TWEET	125	2012-2013	FL
TWEET (Rear Drum Model)	125	2010-2012	FL
TWEET RS	125	2010-2013	FL
TWEET (Rear Drum Model)	150	2010-2012	FL
TWEET RS	150	2010-2013	FL
PGO			
PMS	50	1999	FL
T REX	50	1999	FL
PMS	110	1999	FL
T REX	110	1999	FL
T REX	125	1999	FL
T REX	150	2001	FL
SYM			
FIDDLE II	50	2008-2011	FL
JET 4	50	2010-2011	FL
JET 4 R	50	2011	FL
JET BASIX	50	2006-2009	FL
JET EURO X	50	2006-2010	FL
JET EURO XS	50	1999-2005	FL
JET SPORT X	50	2006-2010	FL
JUNGLE	50	1999-2002	FL
MASK	50	2000-2005	FL
RED DEVIL	50	1999-2009	FL
SYMPHONY	50	2009-2011	FL

MODELLO MODEL	CC	ANNO YEAR	POSIZIONE POSITION
SYMPHONY SR	50	2010-2012	FL
SYMPLY	50	2007-2011	FL
JET	100	1999-2000	FL
JUNGLE	100	1999-2002	FL
ATTILA	125	1999-2000	FL
CITY COM	125	2008-2010	FL
FIDDLE II	125	2008-2011	FL
HD EVO i	125	2007-2011	FL
HD S EVO	125	2007	FL
HD2	125	2010-2011	FL
JET 4	125	2009-2011	FL
MEGALO	125	2000-2007	FL
SR	125	1998	FL
SUPER DUKE	125	1999-2002	FL
SYMPHONY	125	2009-2011	FL
SYMPHONY SR	125	2010-2012	FL
SYMPLY	125	2007-2008	FL
SYMPLY II	125	2009-2011	FL
FIDDLE II	150	2008-2011	FL
SUPER DUKE	150	1999-2002	FL
SYMPHONY	150	2010-2011	FL
SYMPHONY S	150	2010-2012	FL
SYMPHONY SR	150	2010-2012	FL
H 200 SE	200	2006	FL
HD EVO i	200	2007-2012	FL
HD S EVO	200	2007	FL
HD2 i	200	2010-2011	FL
CITY COM 300i	300	2008-2011	FL
CITY COM 300i	300	2008-2011	R

Le immagini hanno il solo scopo di presentare i prodotti.
The images used are aimed at presenting the products only.

FL > pastiglia anteriore sinistra / front left pad
FR > pastiglia anteriore destra / front right pad
R > pastiglia posteriore / rear pad

801

CM55
- Sinterizzata stradale ant. uso sportivo
- Front sintered pad

SM1
- Semimetallica polivalente
- Semi-metallic pad

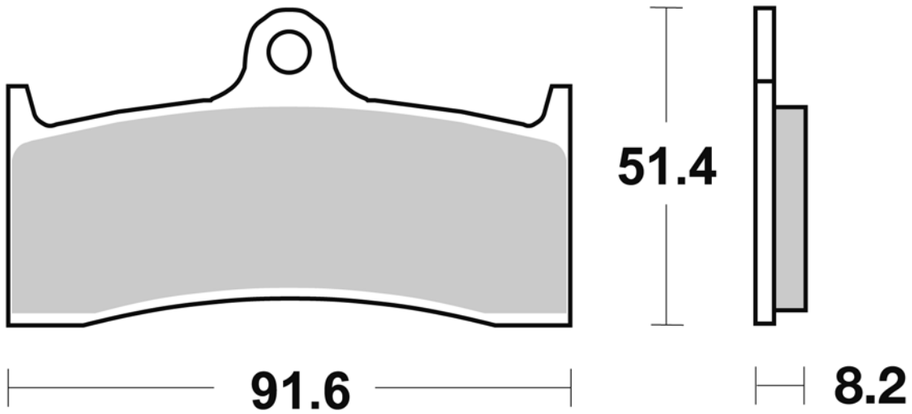

MODELLO MODEL	CC	ANNO YEAR	POSIZIONE POSITION
BUELL			
M2 CYCLONE	1200	1998-2002	**FR**
S1 LIGHTNING	1200	1998-2002	**FR**
S3 THUNDERBOLT	1200	1998-2002	**FR**
S3T THUNDERBOLT	1200	1998-2002	**FR**
X1 LIGHTNING	1200	1999-2002	**FR**
HONDA			
CB	1284	1998-2000	**FL/FR**
KAWASAKI			
ZX7RR NINJA	750	1996-2003	**FL/FR**
ZX7RR NINJA	750	1996-2002	**FL/FR**
ZX9R NINJA	900	1996-1997	**FL/FR**

MODELLO MODEL	CC	ANNO YEAR	POSIZIONE POSITION
MV AGUSTA			
BRUTALE	750	2001-2006	**FL/FR**
BRUTALE S	750	2001-2006	**FL/FR**
BRUTALE SERIE ORO	750	2002-2006	**FL/FR**
F4	750	2000-2006	**FL/FR**
F4 S	750	2000-2006	**FL/FR**
F4 SENNA	750	2000-2006	**FL/FR**
F4 SERIE ORO	750	1998-1999	**FL/FR**
BRUTALE S	910	2006-2008	**FL/FR**
F4 AGO	1000	2005	**FL/FR**
F4 MAMBA	1000	2004-2007	**FL/FR**
F4 S	1000	2004-2007	**FL/FR**

805

SM1
- Semimetallica polivalente
- Semi-metallic pad

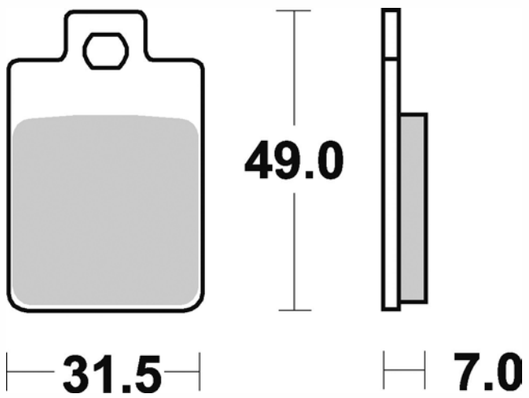

MODELLO MODEL	CC	ANNO YEAR	POSIZIONE POSITION
PIAGGIO			
NRG	50	1996-2001	**FL**
SFERA ET2	50	1997	**FL**
SFERA RST	50	1995-2001	**FL**

MODELLO MODEL	CC	ANNO YEAR	POSIZIONE POSITION
ZIP CAT DT 2T	50	2001-2005	**FL**
SFERA	80	1991	**FL**
TYPHOON	80	1997-1998	**FL**
SFERA 4t	125	1996-2001	**FL**

806

CM55
- Sinterizzata stradale ant. uso sportivo
- Front sintered pad

SM1
- Semimetallica polivalente
- Semi-metallic pad

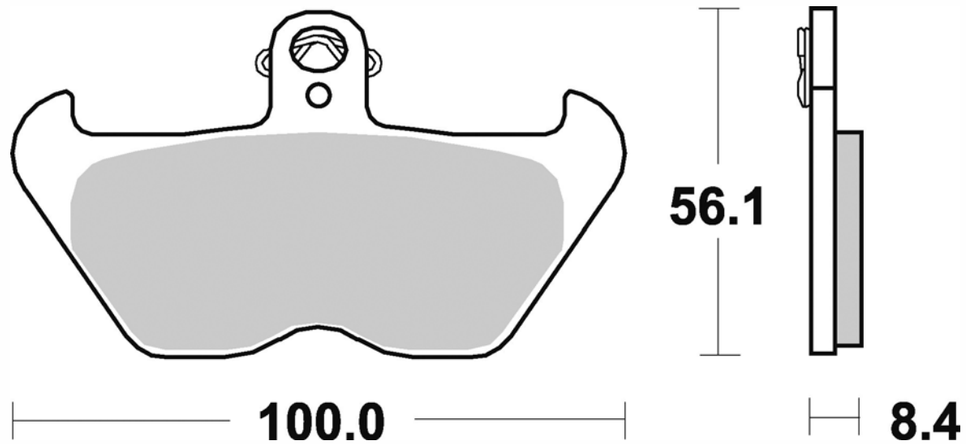

MODELLO MODEL	CC	ANNO YEAR	POSIZIONE POSITION
BMW			
R 850 C	850	1998-2001	**FL/FR**
R 850 GS	850	1998-2007	**FL/FR**
R 850 R	850	1994-2003	**FL/FR**
R 850 RT	850	1995-2001	**FL/FR**
R 1100 GS	1100	1994-2001	**FL/FR**
R 1100 R	1100	1995-2001	**FL/FR**
R 1100 RS	1100	1994-2001	**FL/FR**

MODELLO MODEL	CC	ANNO YEAR	POSIZIONE POSITION
R 1100 RT	1100	1994-2001	**FL/FR**
R 1100 RT ABS	1100	1994-2001	**FL/FR**
R 1100 S	1100	1998-2000	**FL/FR**
R 1150 GS	1150	1999-2001	**FL/FR**
K 1200 LT	1200	1999-2000	**FL/FR**
K 1200 RS	1200	1997-2000	**FL/FR**
R 1200 C	1200	1997-2001	**FL/FR**
R 1200 C CLASSIC	1200	2003	**FL/FR**

808

SM1
- Semimetallica polivalente
- Semi-metallic pad

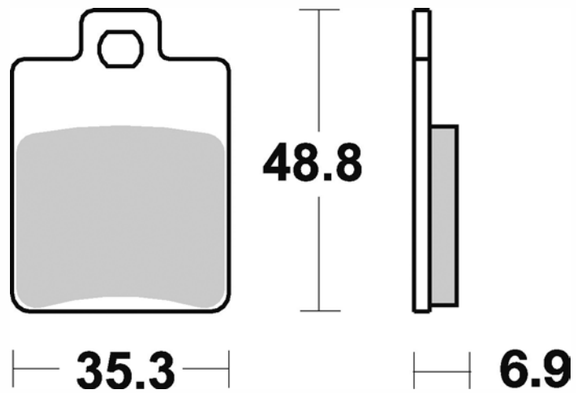

MODELLO MODEL	CC	ANNO YEAR	POSIZIONE POSITION
DERBI			
SONAR	50	2009-2011	**FL**
SONAR	125	2009-2011	**FL**
SONAR	150	2009-2010	**FL**
GILERA			
DNA (Grimeca)	50	2000-2002	**R**
DNA (Hengtong)	50	2000-2005	**R**
RUNNER DD - SP	50	1997-2004	**R**
DNA (Grimeca)	125	2001-2002	**R**
DNA (Hengtong)	125	2001-2003	**R**
RUNNER FX	125	2000-2005	**R**
RUNNER FX SP (Grimeca)	125	2002-2005	**R**
RUNNER FX SP (Hengtong)	125	2002-2003	**R**
RUNNER FX SP scooter	125	1999-2001	**R**
DNA (Grimeca)	180	2001-2003	**R**

MODELLO MODEL	CC	ANNO YEAR	POSIZIONE POSITION
DNA (Hengtong)	180	2001-2003	**R**
RUNNER FXR 2t (Grimeca)	180	2000-2005	**R**
RUNNER FXR 2t (Hengtong)	180	2000	**FL**
RUNNER FXR 2t (Hengtong)	180	2000	**R**
RUNNER FXR SP 2t (Grimeca)	180	1999-2005	**R**
RUNNER FXR SP 2t (Hengtong)	180	2002-2003	**R**
RUNNER VXR 4t (Hengtong)	180	2001	**R**
FUOCO	500	2007-2014	**FL/FR**
PEUGEOT			
TWEET RS	50	2010-2013	**R**
TWEET	125	2012-2013	**R**
TWEET RS	125	2010-2013	**R**
TWEET RS	150	2010-2013	**R**
PIAGGIO			
LIBERTY (GRIMECA CALIPER) (2T)	50	1997-2010	**FL**

Le immagini hanno il solo scopo di presentare i prodotti.
The images used are aimed at presenting the products only.

FL > pastiglia anteriore sinistra / front left pad
FR > pastiglia anteriore destra / front right pad
R > pastiglia posteriore / rear pad

MODELLO MODEL	CC	ANNO YEAR	POSIZIONE POSITION
LIBERTY (heng tong caliper) (2T)	50	1997-2011	FL
LIBERTY 2T SPORT	50	2007-2008	FL
LIBERTY 4T (grimeca caliper)	50	2000-2009	FL
LIBERTY 4T (heng tong caliper)	50	2000-2009	FL
LIBERTY 4T SPORT	50	2007-2008	FL
NRG EXTREME (rear disc/freno disco post)	50	1999-2001	R
NRG MC3 DD	50	2001-2004	R
NRG POWER DD	50	2005-2013	R
NRG POWER PUREJET	50	2004-2011	R
NRG PUREJET	50	2004-2010	R
NRG SILVER BULLETT	50	2010	R
VESPA ET2	50	1997-2005	FL
VESPA ET4	50	2001-2004	FL
VESPA LX 2T (Rear Drum Model)	50	2005-2013	FL
VESPA LX 4T (Rear Drum Model)	50	2005-2013	FL
VESPA LXV	50	2007-2009	FL
VESPA S 2T (Rear Drum Model)	50	2007-2013	FL
VESPA S 4T (Rear Drum Model)	50	2008-2013	FL
ZIP 2T (Rear Drum Model)	50	2000-2013	FL
ZIP 4T (Grim./HengTong cal. - Rear Drum)	50	2000-2013	FL
ZIP FAST RIDER 2T	50	1996-2000	FL
ZIP RST	50	1996-1999	FL
ZIP SP 2T (Rear Drum Model)	50	1996-2013	FL
ZIP	100	2007-2010	FL
LIBERTY (Rear Drum Model)	125	1997-2002	FL
LIBERTY 4T (Rear Drum Model)	125	2007-2008	FL
LIBERTY 4T DELIVERY (Rear Drum Model)	125	2008-2009	FL
LIBERTY 4T SPORT (Rear Drum Model)	125	2006-2008	FL
MP3	125	2008	FL/FR
VESPA ET4	125	1996-2005	FL
VESPA LX (Rear Drum Model)	125	2005-2013	FL
VESPA LXV	125	2007-2012	FL

MODELLO MODEL	CC	ANNO YEAR	POSIZIONE POSITION
VESPA PX	125	1998-2000	FR
VESPA S (Rear Drum Model)	125	2007-2013	FL
VESPA S SPORT (Rear Drum Model)	125	2011-2013	FL
ZIP 4T	125	2000-2004	FL
LIBERTY 4t	150	2008	FL
LIBERTY 4T SPORT	150	2008	FL
LIBERTY LE	150	2000-2004	FL
VESPA ET4	150	1999-2005	FL
VESPA LX	150	2005-2012	FL
VESPA S (Rear Drum Model)	150	2007-2012	FL
VESPA S SPORT (Rear Drum Model)	150	2011-2012	FL
LIBERTY 4t	200	2005-2008	FL
LIBERTY 4T SPORT	200	2006-2008	FL
MP3	250	2006-2008	FL/FR
MP3 LT	250	2009	FL/FR
MP3 MIC	250	2008-2009	FL/FR
MP3 IE LT	300	2010-2011	FL/FR
MP3 LT	300	2010-2011	FL/FR
MP3 LT IBRIDO	300	2010-2013	FL/FR
MP3 MIC	300	2010	FL/FR
MP3	400	2007-2009	FL/FR
MP3 LT	400	2008-2010	FL/FR
MP3 LT SPORT	400	2008-2010	FL/FR
MP3 EFI	500	2009-2010	FL/FR
SYM			
SYMPHONY	50	2010-2011	R
SYMPHONY SR	50	2010-2012	R
SYMPHONY	125	2010-2011	R
SYMPHONY SR	125	2010-2012	R
SYMPHONY	150	2010-2011	R
SYMPHONY S	150	2010-2012	R
SYMPHONY SR	150	2010-2012	R

812

CM44
- Sinterizzata off-road
- Offroad sintered pad

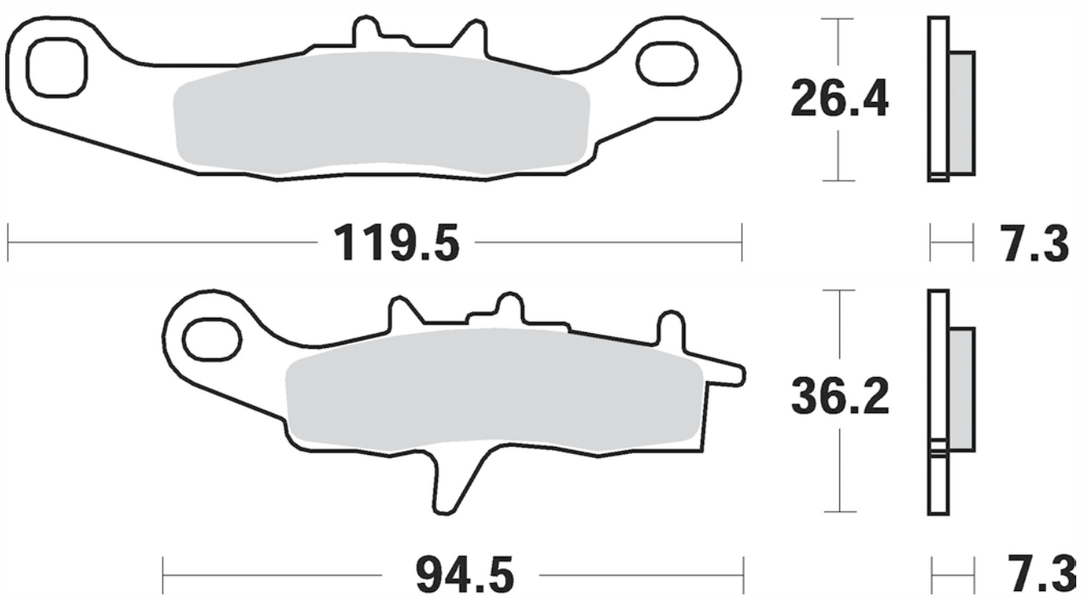

MODELLO MODEL	CC	ANNO YEAR	POSIZIONE POSITION
KAWASAKI			
KX	80	1997-1999	FL
KX	85	2000-2015	FL
KX	100	1997-2015	FL

MODELLO MODEL	CC	ANNO YEAR	POSIZIONE POSITION
SUZUKI			
RM	85	2005-2011	FL
RM	100	2003-2004	FL

813

CM56
- Sinterizzata stradale post. uso sportivo
- Rear sintered pad

SM1
- Semimetallica polivalente
- Semi-metallic pad

CM55
- Sinterizzata stradale ant. uso sportivo
- Front sintered pad

P30
- Sinterizzata scooter
- Scooter sintered pad

CM66
- Semimetallica uso racing
- Semi-metallic pad racing use only

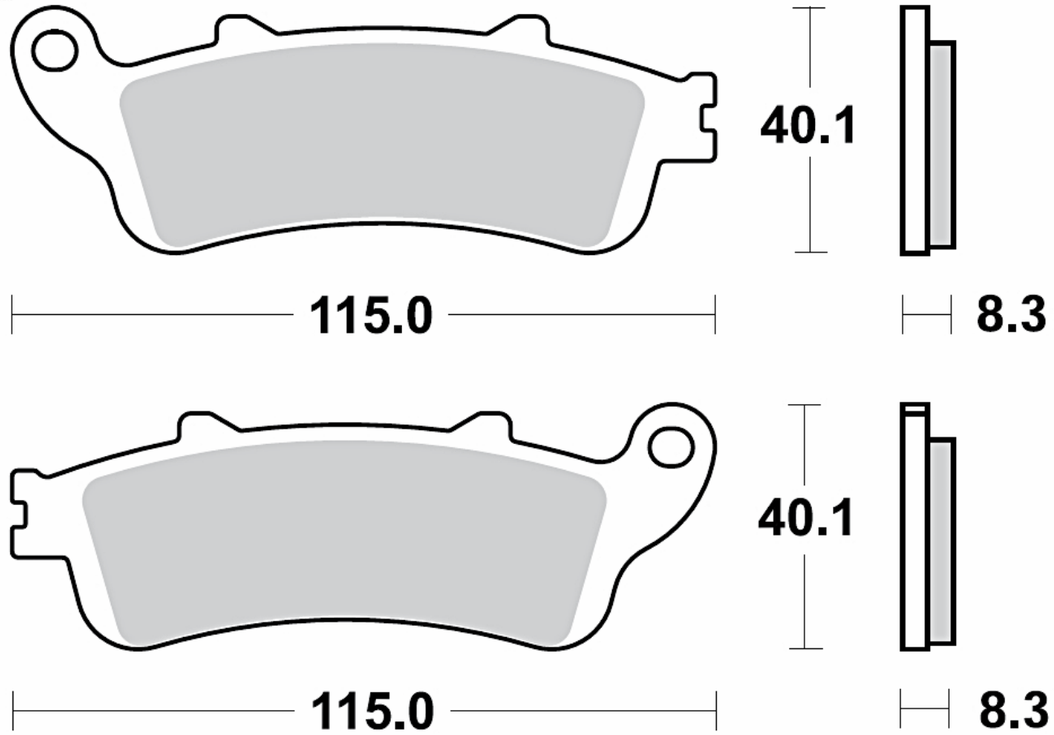

MODELLO MODEL	CC	ANNO YEAR	POSIZIONE POSITION
HONDA			
PANTHEON	125	1998-2002	FL
PANTHEON	150	1998-2002	FL
FORZA	250	2000-2004	FL
JAZZ	250	2001-2004	FL
SILVER WING	400	2006-2008	FL
SILVER WING	600	2001-2007	FL
SILVER WING ABS	600	2003-2007	FL
NTV DEAUVILLE	650	2002-2005	FL/FR
NTV DEAUVILLE	650	2002-2005	R
NTV DEAUVILLE	680	2006-2012	R
VFR V-TEC	800	1998-2005	FL/FR
VFR V-TEC	800	1998-2005	R
VFR V-TEC	800	1998-2010	R
XLV VARADERO	1000	1999-2007	FL/FR
XLV VARADERO	1000	1999-2011	R

MODELLO MODEL	CC	ANNO YEAR	POSIZIONE POSITION
XLV VARADERO ABS	1000	2004-2011	R
CBR XX	1100	1997-2007	FL/FR
CBR XX	1100	1997-2007	R
ST PAN EUROPEAN ABS-CBS-TCS	1100	1996-2001	FL/FR
X ELEVEN	1100	2000-2003	FL/FR
X ELEVEN	1100	2000-2003	R
ST PAN EUROPEAN	1300	2002-2007	FL/FR
ST PAN EUROPEAN	1300	2008-2009	R
ST PAN EUROPEAN	1300	2002-2007	R
ST PAN EUROPEAN ABS	1300	2002-2007	FL/FR
ST PAN EUROPEAN ABS	1300	2008-2009	R
ST PAN EUROPEAN ABS	1300	2002-2007	R
GL GOLD WING	1800	2001-2014	FL/FR
VTX	1800	2001-2007	FL/FR
PEUGEOT			
LOOXOR	125	2005	FL
SV	250	2002-2007	FL

Le immagini hanno il solo scopo di presentare i prodotti.
The images used are aimed at presenting the products only.

FL > pastiglia anteriore sinistra / front left pad
FR > pastiglia anteriore destra / front right pad
R > pastiglia posteriore / rear pad

814

SM1
- Semimetallica polivalente
- Semi-metallic pad

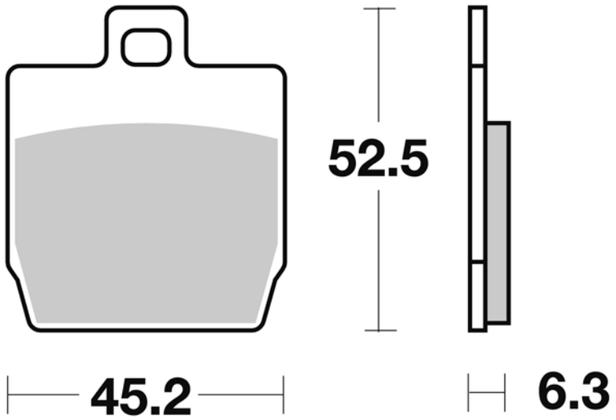

MODELLO MODEL	CC	ANNO YEAR	POSIZIONE POSITION
MBK			
NITRO	50	1997-2010	**R**
STUNT	50	2000-2006	**FL**
STUNT NAKED	50	2005-2010	**FL**

MODELLO MODEL	CC	ANNO YEAR	POSIZIONE POSITION
YAMAHA			
AEROX	50	1997-2014	**R**
SLIDER	50	1999	**FL**

817

SM1
- Semimetallica polivalente
- Semi-metallic pad

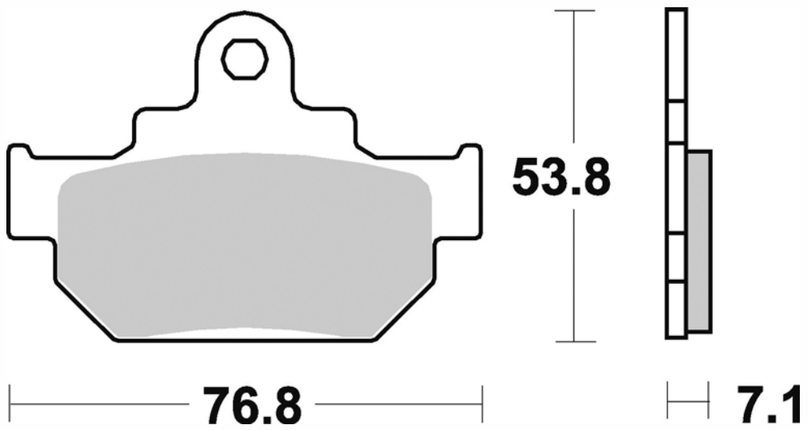

MODELLO MODEL	CC	ANNO YEAR	POSIZIONE POSITION
SUZUKI			
GZ MARAUDER (Rear Drum Model)	125	1998-2010	**FL**
VL INTRUDER	125	2000-2001	**FL**
TU X	250	1996	**FL**
VL INTRUDER	250	2000-2001	**FL**

MODELLO MODEL	CC	ANNO YEAR	POSIZIONE POSITION

822

CM56
- Sinterizzata stradale post. uso sportivo
- Rear sintered pad

P30
- Sinterizzata scooter
- Scooter sintered pad

SM1
- Semimetallica polivalente
- Semi-metallic pad

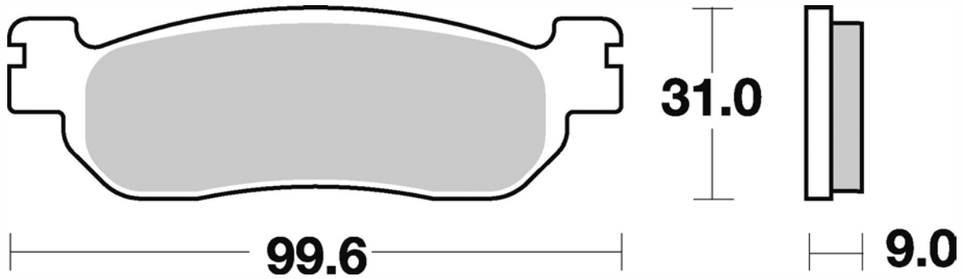

MODELLO MODEL	CC	ANNO YEAR	POSIZIONE POSITION
MBK			
CITYLINER	125	2008-2010	**R**
SKYLINER	250	2000-2003	**R**
SKYLINER ABS	250	2003	**R**
YAMAHA			
TW (Rear Drum Model)	125	1999-2004	**FL**
X-MAX YP R ABS	125	2011-2014	**R**
TW	200	2001-2008	**FL**
SEROW	225	2005-2006	**FL**
TW	225	2005-2006	**FL**
XT	225	2001-2007	**FL**
SEROW	250	2005-2006	**FL**

MODELLO MODEL	CC	ANNO YEAR	POSIZIONE POSITION
TRICKER	250	2005-2006	**FL**
X-CITY	250	2008-2014	**R**
X-MAX YP R	250	2005-2013	**R**
X-MAX YP R ABS	250	2011-2014	**R**
X-MAX YP R SPORT	250	2011-2012	**R**
XT X	250	2005-2006	**FL**
YP MAJESTY DX	250	1998-1999	**R**
YP MAJESTY DX/ABS	250	1999-2005	**R**
X-MAX YP	400	2013-2014	**R**
X-MAX YP ABS	400	2014	**R**
YZF R6	600	1999-2002	**R**
YZF R1	1000	2002-2003	**R**

826

CM56
- Sinterizzata stradale post. uso sportivo
- Rear sintered pad

SM1
- Semimetallica polivalente
- Semi-metallic pad

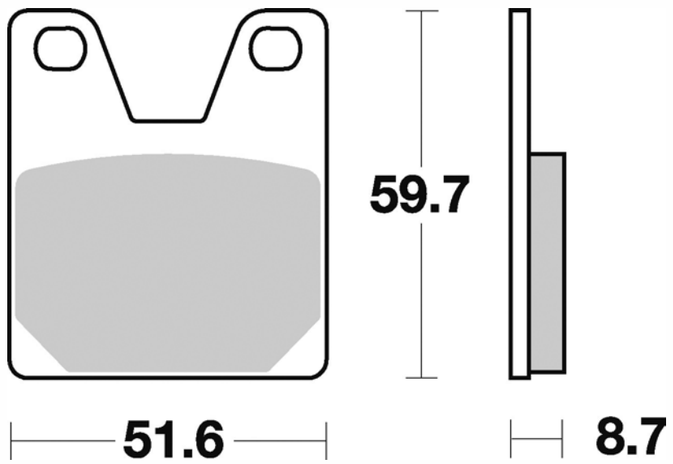

MODELLO MODEL	CC	ANNO YEAR	POSIZIONE POSITION
YAMAHA			
YZF R7	750	1999-2001	**R**
YZF R1	1000	1998-2001	**R**

MODELLO MODEL	CC	ANNO YEAR	POSIZIONE POSITION

Le immagini hanno il solo scopo di presentare i prodotti.
The images used are aimed at presenting the products only.

FL > pastiglia anteriore sinistra / front left pad
FR > pastiglia anteriore destra / front right pad
R > pastiglia posteriore / rear pad

827

CM66
- Semimetallica uso racing
- Semi-metallic pad racing use only

CM55
- Sinterizzata stradale ant. uso sportivo
- Front sintered pad

SM1
- Semimetallica polivalente
- Semi-metallic pad

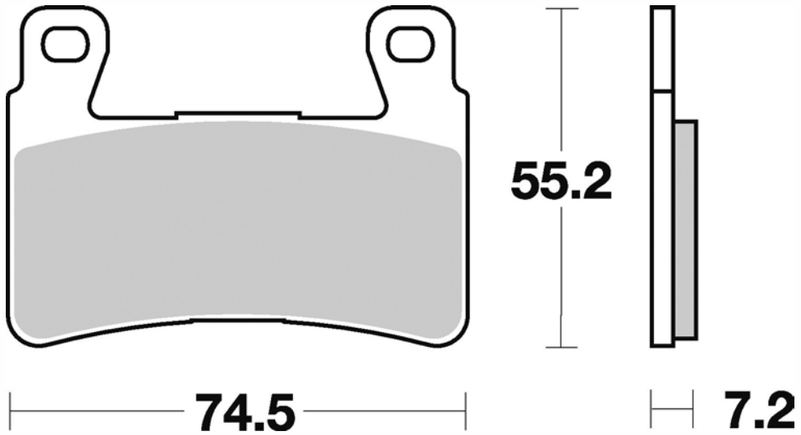

MODELLO MODEL	CC	ANNO YEAR	POSIZIONE POSITION
HARLEY D.			
XR	1200	2008-2010	FL/FR
XR 1200 X	1200	2010-2012	FL/FR
HONDA			
CBR F	600	1999-2007	FL/FR
CBR F SPORT	600	2001-2002	FL/FR
CBR RR	600	2003-2004	FL/FR
CBR RR	900	1998-1999	FL/FR
CBR RR	929	2000-2001	FL/FR

MODELLO MODEL	CC	ANNO YEAR	POSIZIONE POSITION
CBR RR	954	2002-2003	FL/FR
VTR SP1 RC51	1000	2000-2001	FL/FR
VTR SP2 RC51	1000	2002-2004	FL/FR
CB ABS	1100	2014	FL/FR
CB EX ABS	1100	2014	FL/FR
CB	1284	2001-2008	FL/FR
GOLD WING F6B	1800	2013-2014	FL/FR
GOLD WING F6C	1800	2014	FL/FR

828

CM56
- Sinterizzata stradale post. uso sportivo
- Rear sintered pad

SM1
- Semimetallica polivalente
- Semi-metallic pad

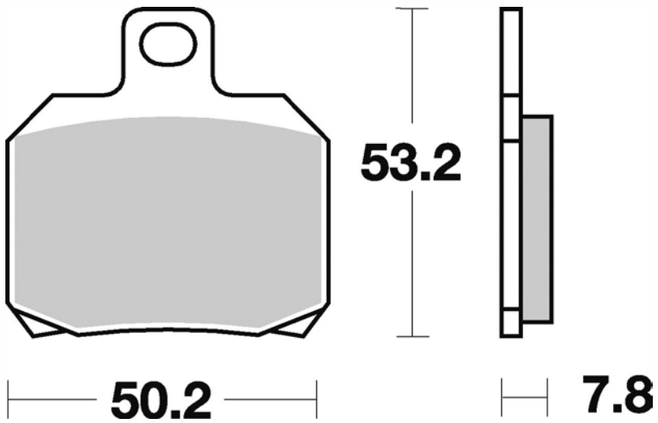

MODELLO MODEL	CC	ANNO YEAR	POSIZIONE POSITION
APRILIA			
RS	50	2006-2010	FL
ETV Capo Nord	1000	2001-2007	R
ETV CAPO NORD ABS	1000	2001-2007	R
RSV	1000	1998-2003	R
RSV FACTORY	1000	2003-2007	R
RSV R	1000	2000-2008	R
RSV SP	1000	1999-2000	R
RSV4 FACTORY	1000	2009-2011	R
RSV4 FACTORY APRC	1000	2011-2012	R
RSV4 R	1000	2009-2012	R

MODELLO MODEL	CC	ANNO YEAR	POSIZIONE POSITION
SL 1000 FALCO	1000	2000-2004	R
TUONO	1000	2002-2005	R
TUONO FIGHTER	1000	2002-2005	R
TUONO R (2 pads per caliper)	1000	2003-2009	R
TUONO R (4 pads per caliper)	1000	2003-2005	R
TUONO V4 R	1000	2011-2013	R
TUONO V4 R APRC	1000	2011-2013	R
TUONO V4 R APRC ABS	1000	2014	R
BENELLI			
TORNADO TRE	900	2003-2006	R
TORNADO TRE RS	900	2004-2006	R
CAFE RACER	1130	2005-2007	R

MODELLO MODEL	CC	ANNO YEAR	POSIZIONE POSITION
TITANIUM	1130	2005-2007	R
TNT	1130	2005-2006	R
TNT RS	1130	2005-2007	R
TORNADO	1130	2006	R
BIMOTA			
BB3	1000	2014	R
DB5 MILLE	1000	2005-2006	R
BOMBARDIER			
TRAXTER 4x4	500	1999-2000	FL/FR
TRAXTER 4x4	500	1999-2000	R
CAGIVA			
RAPTOR	650	2001-2007	R
RAPTOR	650	2001-2007	R
V-RAPTOR	650	2001-2005	R
RAPTOR	1000	2000-2006	R
V-RAPTOR	1000	2000-2006	R
XTRA-RAPTOR	1000	2002-2004	R
XTRA-RAPTOR	1000	2002-2004	R
DERBI			
GP1 EURO2	50	2005	FL
GP1 RACE	50	2005-2007	FL
GPR Nude	50	2004-2009	FL
GPR RACING	50	2004-2010	FL
SENDA DRD EVO SM	50	2008-2011	FL
SENDA DRD PRO R	50	2005-2012	FL
SENDA DRD X-TREME SM	50	2011-2012	FL
GPR CUP	80	2004-2005	FL
GP1	125	2005	FL
GP1	125	2005	R
GP1 RACING LOW SEAT	125	2007-2009	FL
MULHACEN CAFE	125	2008-2011	FL
SENDA DRD R	125	2010-2012	FL
SENDA DRD SM	125	2010-2012	FL
GP1	250	2005-2007	FL
GP1	250	2005-2007	R
GP1	250	2005	FL
GP1	250	2005	R
GP1 RACING LOW SEAT	250	2007-2009	FL
MULHACEN	659	2005-2008	R
DUCATI			
MULTISTRADA single disk	620	2005	R
MULTISTRADA single disk	620	2006	R
MULTISTRADA single disk	620	2005-2006	R
MONSTER	696	2008-2014	R
MONSTER	696	2008-2011	R
MONSTER	696	2012-2014	R
MONSTER ABS	696	2010-2014	R
749	748	2002-2007	R
749 R	748	2004-2007	R
749 S	748	2003-2007	R
SPORT	750	2000-2002	R
HYPERMOTARD 796	800	2010-2012	R
MONSTER 796	800	2011-2014	R
MONSTER 796 ABS	800	2011-2014	R
HYPERMOTARD	820	2013-2014	R
HYPERMOTARD SP	820	2013-2014	R
HYPERSTRADA	820	2013-2014	R
848	850	2008-2010	R
848 EVO	850	2011-2013	R
STREETFIGHTER	850	2012-2014	R
PANIGALE 899	898	2014	R
SPORT	900	2002	R
SS SUPERSPORT	900	1998-2002	R
ST4	916	1998-2004	R
ST2	944	1997-2003	R
ST4 S	996	2001-2005	R
ST4 S ABS	996	2003-2006	R
999 BIPOSTO	998	2002-2006	R
999 R	998	2002-2007	R
999 S	998	2002-2007	R
DESMOSEDICI RR	1000	2008-2009	R
MONSTER S2R	1000	2006-2007	R
MULTISTRADA DS	1000	2003-2006	R
MULTISTRADA DS S	1000	2005-2006	R
REPLICA	1000	1984-1985	R
ST3	1000	2004-2006	R
ST3 S ABS	1000	2006-2007	R
1098	1100	2007-2008	R
1098 S	1100	2007-2008	R

MODELLO MODEL	CC	ANNO YEAR	POSIZIONE POSITION
1098 S TRICOLORE	1100	2007-2008	R
HYPERMOTARD	1100	2007-2009	R
HYPERMOTARD EVO	1100	2010-2012	R
HYPERMOTARD EVO SP	1100	2010-2012	R
HYPERMOTARD S	1100	2007-2009	R
MONSTER 1100	1100	2009-2010	R
MONSTER 1100 ABS	1100	2010	R
MONSTER 1100 S	1100	2009-2010	R
MONSTER 1100 S ABS	1100	2010	R
MONSTER DIESEL	1100	2013	R
MONSTER EVO	1100	2011-2012	R
MONSTER EVO ABS	1100	2011-2013	R
MULTISTRADA DS	1100	2007-2009	R
MULTISTRADA DS S	1100	2007-2009	R
STREETFIGHTER	1100	2009-2011	R
STREETFIGHTER S	1100	2009-2013	R
1198	1198	2009-2011	R
1198 S	1198	2009-2010	R
1198 SP	1198	2011	R
1098 R	1200	2008-2009	R
MONSTER	1200	2014	R
MONSTER S	1200	2014	R
MULTISTRADA	1200	2010-2012	R
MULTISTRADA ABS	1200	2010-2014	R
MULTISTRADA S ABS	1200	2010-2012	R
MULTISTRADA S ABS PIKES PEAK	1200	2012-2014	R
MULTISTRADA S GT	1200	2012-2013	R
MULTISTRADA S SPORT	1200	2011-2012	R
MULTISTRADA S TOURING	1200	2010-2014	R
MULTISTRADA TOURING ABS	1200	2010-2011	R
PANIGALE	1200	2012-2013	R
PANIGALE ABS	1200	2012-2014	R
PANIGALE R	1200	2014	R
PANIGALE S	1200	2012-2013	R
PANIGALE S ABS	1200	2012-2014	R
PANIGALE S TRICOLORE	1200	2012-2013	R
SUPERLEGGERA	1200	2014	R
SUPERLEGGERA	1200	2014	R
GILERA			
NEXUS	500	2004-2011	R
NEXUS i.e. SP	500	2006-2008	R
KTM			
RC8	1190	2008-2011	R
RC8 R	1190	2010-2012	R
SUPER DUKE R	1290	2014	R
MALAGUTI			
DRAKON NKD	50	2005-2009	FR
PHANTOM MAX	125	2004	R
PHANTOM MAX	200	2004	R
MBK			
SKYLINER	125	2001-2010	R
SKYLINER	150	2002	R
SKYLINER	180	2003	R
MORINI			
9 1/2	1200	2006-2010	R
CORSARO	1200	2005-2009	R
SCRAMBLER	1200	2008-2009	R
MOTO GUZZI			
BREVA	750	2003-2007	R
NEVADA	750	2003-2007	R
V7 CLASSIC	750	2008-2013	R
V7 RACER	750	2010-2013	R
MV AGUSTA			
BRUTALE	675	2012-2014	R
F3	675	2012-2014	R
F3 SERIE ORO	675	2012-2013	R
BRUTALE	800	2013-2014	R
F3	800	2014	R
RIVALE	800	2013-2014	R
PIAGGIO			
X8	125	2004	R
X9	125	2000-2002	FL
X9	125	2000-2002	R
X9 EVOLUTION (brembo caliper)	125	2003-2004	FL/FR
X9 EVOLUTION (brembo caliper)	125	2003-2004	R
X9 EVOLUTION (HENGTONG CALIPER)	125	2005-2007	R
X9 AMALFI	180	2000-2003	FL/FR
X9 AMALFI	180	2000-2003	R
X8	200	2004-2005	R

Le immagini hanno il solo scopo di presentare i prodotti.
The images used are aimed at presenting the products only.

FL > pastiglia anteriore sinistra / front left pad
FR > pastiglia anteriore destra / front right pad
R > pastiglia posteriore / rear pad

MODELLO MODEL	CC	ANNO YEAR	POSIZIONE POSITION
X9	200	2002-2003	**FL/FR**
X9	200	2002-2003	**R**
X9 EVOLUTION	200	2003-2004	**FL/FR**
X9 EVOLUTION	200	2003-2004	**R**
X9	250	2000-2004	**FL/FR**
X9	250	2000-2004	**R**
BEVERLY TOURER	400	2008-2010	**FL/FR**
BEVERLY TOURER	400	2008-2010	**R**
BEVERLY	500	2002-2005	**R**
BEVERLY	500	2002-2009	**FL/FR**
BEVERLY	500	2007-2009	**R**
BEVERLY CRUISER	500	2007-2012	**FL/FR**
BEVERLY CRUISER	500	2007-2012	**R**
X9	500	2001-2002	**FL/FR**
X9	500	2001-2002	**R**
X9 EVOLUTION	500	2003-2007	**R**
X9 EVOLUTION ABS	500	2003	**R**

MODELLO MODEL	CC	ANNO YEAR	POSIZIONE POSITION
X9 EVOLUTION ABS	500	2006-2007	**R**
RIEJU			
MRT PRO	50	2009-2014	**FL**
MRT PRO SUPERMOTARD	50	2009-2014	**FL**
SUZUKI			
BURGMAN	125	2002-2006	**R**
BURGMAN	150	2002-2006	**R**
YAMAHA			
MAXTER	125	2001	**R**
X-CITY	125	2008-2013	**R**
X-MAX YP R	125	2006-2009	**R**
X-MAX YP R	125	2010-2014	**R**
YP MAJESTY	125	2001-2009	**R**
XQ MAXTER	150	2001	**R**
YP MAJESTY	150	2001-2002	**R**
YP MAJESTY	180	2003-2006	**R**

830

P30
- Sinterizzata scooter
- Scooter sintered pad

SM1
- Semimetallica polivalente
- Semi-metallic pad

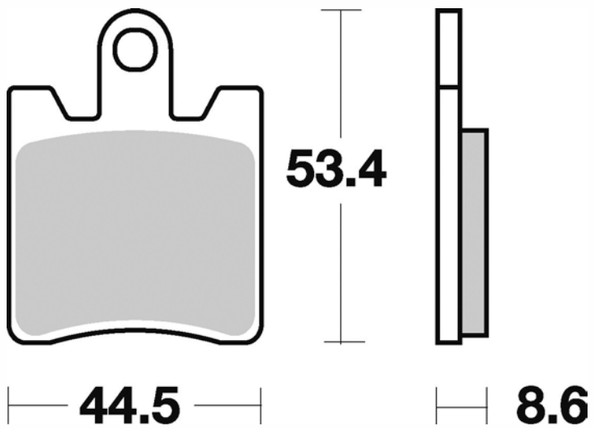

MODELLO MODEL	CC	ANNO YEAR	POSIZIONE POSITION
DAELIM			
ADVANCE	125	1995-1996	**FL**
F1	125	2007	**FL**
OTELLO	125	2007	**FL**
SUZUKI			
BURGMAN	250	1998-2002	**FL**

MODELLO MODEL	CC	ANNO YEAR	POSIZIONE POSITION
BURGMAN	250	2003-2006	**FL/FR**
BURGMAN	400	1999-2006	**FL**
SYM			
JOYMAX EVO	300	2009-2011	**FL**
YAMAHA			
FJR ABS	1300	2006-2013	**FL/FR**

831

SM1
- Semimetallica polivalente
- Semi-metallic pad

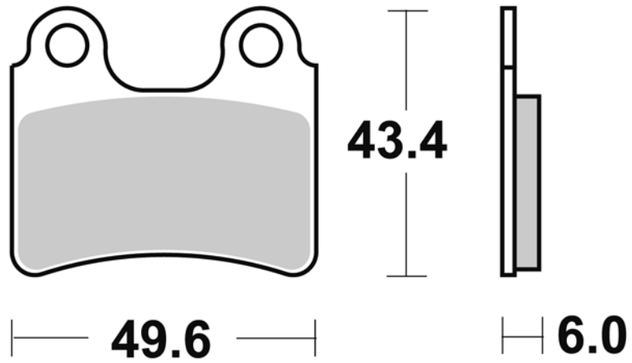

MODELLO MODEL	CC	ANNO YEAR	POSIZIONE POSITION
BETA			
REV3	125	2000-2004	**R**
REV3	125	2000-2008	**FL**
REV3	200	2005-2008	**FL**
REV3	250	2000-2004	**R**
REV3	250	2000-2008	**FL**
REV3	270	2005-2008	**FL**
GAS GAS			
TXT Pro	125	2004-2011	**FL**
TXT Pro	200	2004-2011	**FL**
PAMPERA	250	2002-2005	**FL**
TXT Pro	250	2004-2011	**FL**
TXT Pro	280	2004-2011	**FL**
TXT Pro	300	2004-2011	**FL**

MODELLO MODEL	CC	ANNO YEAR	POSIZIONE POSITION
MONTESA			
315 R	250	2001	**FL**
COTA 4RT	250	2005-2007	**FL**
SCORPA			
SY	250	2002-2007	**FL**
SY F	250	2006-2007	**FL**
SY Long Ride	250	2002-2007	**FL**
SHERCO			
0.8	80	2004-2010	**FL**
1.25	125	2003-2005	**FL**
2.5	250	2003-2005	**FL**
2.9	272	2003	**FL**
3.2 4T	320	2004-2012	**FL**

832

SM1
- Semimetallica polivalente
- Semi-metallic pad

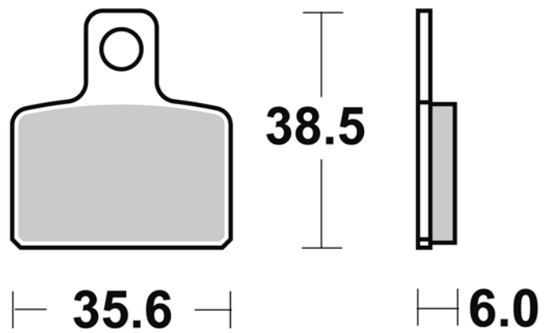

MODELLO MODEL	CC	ANNO YEAR	POSIZIONE POSITION
GAS GAS			
TXT Pro	125	2004-2011	**R**
TXT Pro	200	2004-2011	**R**
TXT Pro	250	2004-2011	**R**
TXT Pro	280	2004-2011	**R**
TXT Pro	300	2004-2011	**R**
HONDA-HM			
BAJA 10/10 JUNIOR	50	1999-2011	**FL**
BAJA 10/10 JUNIOR	50	1999-2011	**R**
BAJA 10/10 SENIOR	50	1999-2011	**FL**
BAJA 10/10 SENIOR	50	1999-2011	**R**
BAJA 12/15	50	1999-2011	**FL**
BAJA 12/15	50	1999-2011	**R**
MONTESA			
315 R	250	2001	**R**
COTA 4RT	250	2005-2007	**R**

MODELLO MODEL	CC	ANNO YEAR	POSIZIONE POSITION
SCORPA			
SY F	125	2006-2007	**R**
TY-S F	125	2006-2007	**R**
SY F	175	2006-2007	**R**
TY-S F	175	2006-2007	**R**
SY	250	2002-2007	**R**
SY F	250	2006-2007	**R**
SY Long Ride	250	2002-2007	**R**
SY Long Ride	280	2002	**R**
SHERCO			
0.8	80	2004-2010	**R**
1.25	125	2003-2005	**R**
2.5	250	2003-2005	**R**
2.9	272	2003	**R**
3.2 4T	320	2004-2012	**R**

Le immagini hanno il solo scopo di presentare i prodotti.
The images used are aimed at presenting the products only.

FL > pastiglia anteriore sinistra / front left pad
FR > pastiglia anteriore destra / front right pad
R > pastiglia posteriore / rear pad

840

SM1
- Semimetallica polivalente
- Semi-metallic pad

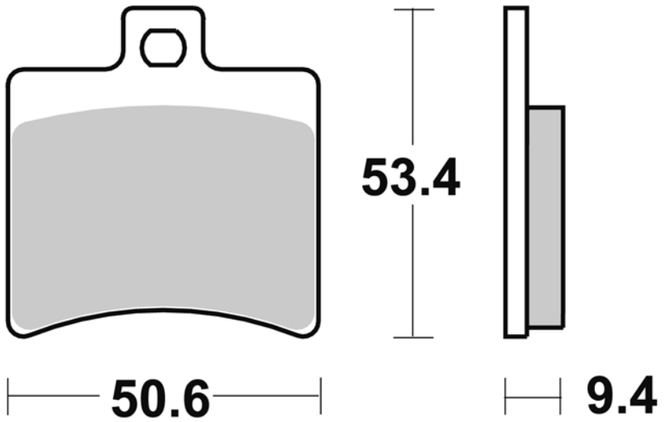

MODELLO MODEL	CC	ANNO YEAR	POSIZIONE POSITION
APRILIA			
SCARABEO 4t	50	2002-2009	**R**
SCARABEO DITECH	50	2001-2004	**R**
SR DITECH	50	2001-2006	**R**
SR R FACTORY	50	2005-2014	**R**
SR RACING	50	2000	**R**
SR STREET	50	2003-2012	**R**
ATLANTIC	125	2003-2011	**R**
RS	125	2006-2011	**R**
SCARABEO	125	1999-2010	**R**
SCARABEO GT	125	1999-2003	**R**
SPORT CITY CUBE	125	2008-2010	**R**
SPORTCITY	125	2004-2007	**R**
SCARABEO	150	1999-2002	**R**
ATLANTIC	200	2003-2004	**R**
SCARABEO GT	200	2001-2004	**R**
SCARABEO IE	200	2012	**R**
SPORTCITY	200	2005-2007	**R**
ATLANTIC	250	2005-2006	**R**
LEONARDO	250	1999-2004	**R**
LEONARDO (Grimeca cal.)	250	1999-2004	**R**
SCARABEO	250	2005-2008	**R**
SCARABEO LIGHT	250	2006-2008	**R**
SPORT CITY CUBE	250	2008-2010	**R**
SPORTCITY	250	2006-2007	**R**
ATLANTIC	300	2010-2011	**R**
LEONARDO (Grimeca cal.)	300	2005-2006	**R**

MODELLO MODEL	CC	ANNO YEAR	POSIZIONE POSITION
SCARABEO	300	2009	**R**
SCARABEO LIGHT	300	2009-2010	**R**
ATLANTIC SPRINT	400	2005-2008	**R**
ATLANTIC	500	2002-2005	**R**
ATLANTIC SPRINT	500	2005-2008	**R**
SCARABEO	500	2003-2005	**R**
BENELLI			
VELVET	250	1999-2003	**R**
VELVET DUSK	400	2003-2004	**R**
DERBI			
BOULEVARD S	125	2007	**R**
RAMBLA	125	2008-2012	**R**
RAMBLA	250	2008-2009	**R**
RAMBLA	300	2010-2012	**R**
MALAGUTI			
F18 WARRIOR	125	2000-2003	**R**
MADISON	125	1999-2001	**R**
MADISON R	125	1999-2005	**R**
MADISON	150	1999-2001	**R**
MADISON	180	2001-2002	**R**
MADISON S	200	2003-2004	**R**
MADISON	250	1999-2003	**R**
MADISON RS	250	2004-2005	**R**
PASSWORD	250	2005-2009	**R**
PHANTOM MAX	250	2005-2006	**R**
MADISON K	400	2002-2006	**R**
SPIDER MAX GT	500	2005-2006	**R**

842

SM1
- Semimetallica polivalente
- Semi-metallic pad

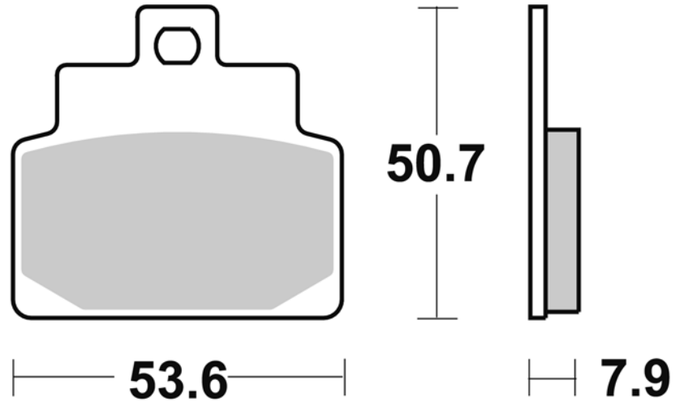

MODELLO MODEL	CC	ANNO YEAR	POSIZIONE POSITION
APRILIA			
SCARABEO	100	2000-2001	**FL**
SCARABEO 4t	100	2001-2009	**FL**
HABANA	125	2000	**FL**
LEONARDO (Grimeca cal.)	125	1999-2004	**R**
LEONARDO ST	125	1999	**FL**
LEONARDO ST	125	1999	**R**
MOJITO	125	2003-2008	**FL**

MODELLO MODEL	CC	ANNO YEAR	POSIZIONE POSITION
MOJITO RETRO	125	1999-2001	**FL**
SR	125	1999-2003	**FL**
LEONARDO (Grimeca cal.)	150	1999	**R**
LEONARDO ST	150	1999	**FL**
LEONARDO ST	150	1999	**R**
SR	150	1999-2003	**FL**
MALAGUTI			
MADISON F	150	2000-2001	**R**

Le immagini hanno il solo scopo di presentare i prodotti.
The images used are aimed at presenting the products only.

FL > pastiglia anteriore sinistra / front left pad
FR > pastiglia anteriore destra / front right pad
R > pastiglia posteriore / rear pad

843

CM77
- Sinterizzata anteriore Harley Davidson
- Front cruiser sintered pad

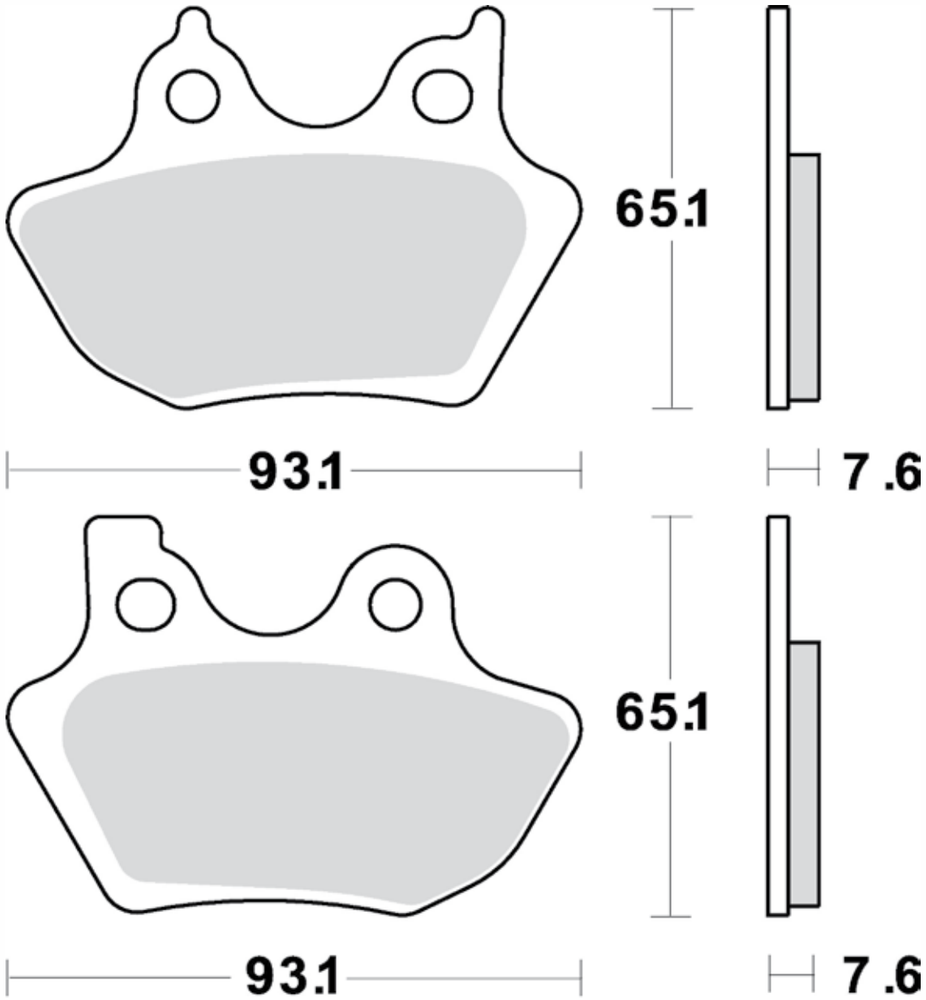

MODELLO MODEL	CC	ANNO YEAR	POSIZIONE POSITION
HARLEY D.			
XL 883 R SPORTSTER	883	2000-2003	**FL/FR**
XL 883 R SPORTSTER	883	2000-2003	**R**
XL SPORTSTER CUSTOM 53	883	2000-2003	**FL**
XL SPORTSTER CUSTOM 53	883	2000-2003	**R**
XLH 883 SPORTSTER	883	2000-2003	**FL**
XLH 883 SPORTSTER	883	2000-2003	**R**
XLH 883 SPORTSTER HUGGER	883	2000-2003	**FL**
XLH 883 SPORTSTER HUGGER	883	2000-2003	**R**
VRSCA V-ROD	1130	2002-2005	**FL/FR**
VRSCA V-ROD	1130	2002-2005	**R**
XL 1200 S SPORT	1200	2000-2003	**FL**
XL 1200 S SPORT	1200	2000-2003	**R**
XLH 1200 SPORTSTER	1200	2000-2003	**FL**
XLH 1200 SPORTSTER	1200	2000-2003	**R**
FLHR/I ROAD KING	1450	2000-2007	**FL/FR**
FLHRCI ROAD KING CLASSIC	1450	2000-2006	**FL/FR**
FLHRCI ROAD KING CLASSIC	1450	2000-2006	**R**
FLHT/I ELECTRA GLIDE STANDARD	1450	2000-2006	**FL/FR**
FLHT/I ELECTRA GLIDE STANDARD	1450	2000-2006	**R**
FLHTCUI ELECTRA GLIDE ULTRA CLASSIC	1450	2000-2006	**FL/FR**
FLHTCUI ELECTRA GLIDE ULTRA CLASSIC	1450	2000-2006	**R**

MODELLO MODEL	CC	ANNO YEAR	POSIZIONE POSITION
FLSTF FAT BOY	1450	2000-2006	**FL**
FLSTF FAT BOY	1450	2000-2006	**R**
FLSTF/I FAT BOY	1450	2003-2006	**FL**
FLSTF/I FAT BOY	1450	2003-2006	**R**
FLSTS HERITAGE SPRINGER	1450	2000-2003	**R**
FLTR/I ROAD GLIDE	1450	2000-2007	**FL/FR**
FLTR/I ROAD GLIDE	1450	2000-2007	**R**
FXD DYNA SUPER GLIDE	1450	2000-2003	**FL**
FXD DYNA SUPER GLIDE	1450	2000-2003	**R**
FXD DYNA SUPER GLIDE	1450	2006-2007	**FL**
FXD DYNA SUPER GLIDE	1450	2006-2007	**R**
FXDB DYNA STREET BOB	1450	2006-2007	**FL**
FXDB DYNA STREET BOB	1450	2006-2007	**R**
FXDC DYNA SUPER GLIDE CUSTOM	1450	2006-2007	**FL**
FXDC DYNA SUPER GLIDE CUSTOM	1450	2006-2007	**R**
FXDL DYNA LOW RIDER	1450	2000-2006	**FL**
FXDL DYNA LOW RIDER	1450	2000-2006	**R**
FXDWG DYNA WIDE GLIDE	1450	2006-2007	**FL**
FXDWG DYNA WIDE GLIDE	1450	2006-2007	**R**
FXDX DYNA SUPER GLIDE T-SPORT	1450	2000-2005	**FL/FR**
FXDX DYNA SUPER GLIDE T-SPORT	1450	2000-2005	**R**
FXST SOFTAIL STANDARD	1450	2000-2007	**FL**
FXST SOFTAIL STANDARD	1450	2000-2007	**R**

MODELLO MODEL	CC	ANNO YEAR	POSIZIONE POSITION
FXSTB/I NIGHT TRAIN	1450	2000-2007	**FL**
FXSTB/I NIGHT TRAIN	1450	2000-2007	**R**
FXSTD/I SOFTAIL DEUCE	1450	2000-2006	**FL**
FXSTD/I SOFTAIL DEUCE	1450	2000-2006	**R**
FXSTS/I SPRINGER SOFTAIL	1450	2000-2006	**R**
FLHT/I ELECTRA GLIDE STANDARD	1584	2007	**FL/FR**
FLHT/I ELECTRA GLIDE STANDARD	1584	2007	**R**
FLHTCU ELECTRA GLIDE ULTRA CLASSIC	1584	2007-2008	**FL/FR**
FLHTCU ELECTRA GLIDE ULTRA CLASSIC	1584	2007-2008	**R**

MODELLO MODEL	CC	ANNO YEAR	POSIZIONE POSITION
FLHX STREET GLIDE	1584	2006-2007	**FL/FR**
FLHX STREET GLIDE	1584	2006-2007	**R**
FLSTF FAT BOY	1584	2007	**FL**
FLSTF FAT BOY	1584	2007	**R**
FLSTN SOFTAIL DELUXE	1584	2005-2007	**FL**
FLSTN SOFTAIL DELUXE	1584	2005-2007	**R**
FXDL DYNA LOW RIDER	1584	2007	**FL**
FXDL DYNA LOW RIDER	1584	2007	**R**

853

SM1
- Semimetallica polivalente
- Semi-metallic pad

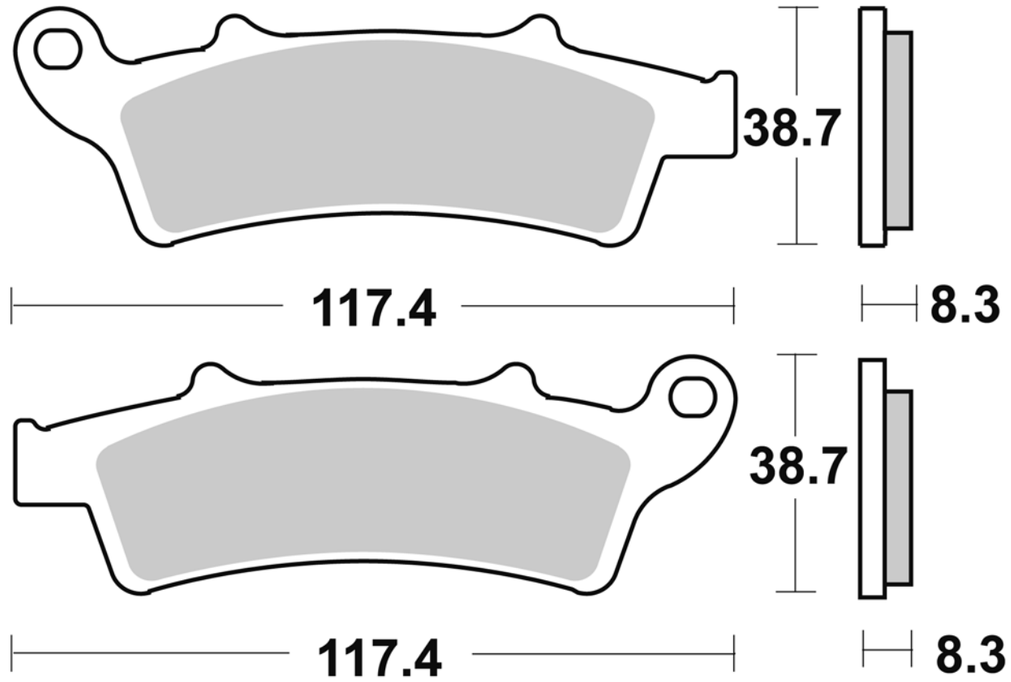

MODELLO MODEL	CC	ANNO YEAR	POSIZIONE POSITION
APRILIA			
ATLANTIC	125	2003-2011	**FL**
SCARABEO	125	2004-2010	**FL**
ATLANTIC	200	2003-2004	**FL**
SCARABEO IE	200	2012	**FL**
ATLANTIC	250	2005-2006	**FL**
SCARABEO	250	2005-2008	**FL**
SCARABEO LIGHT	250	2006-2008	**FL**
ATLANTIC	300	2010-2011	**FL**
SCARABEO	300	2009	**FL**
SCARABEO LIGHT	300	2009-2010	**FL**
ATLANTIC SPRINT	400	2005-2008	**FL**
ATLANTIC SPRINT	500	2005-2008	**FL**

MODELLO MODEL	CC	ANNO YEAR	POSIZIONE POSITION
KYMCO			
PEOPLE GTI	125	2010-2014	**FR**
PEOPLE GTI	200	2010-2014	**FR**
K-XCT i	300	2012-2013	**FR**
K-XCT i ABS	300	2014	**FR**
PEOPLE GTI	300	2010-2014	**FR**
PEOPLE GTI ABS	300	2012-2014	**FR**
MALAGUTI			
MADISON	250	1999-2003	**FL**
MADISON K	400	2002-2006	**FL**
PIAGGIO			
BEVERLY	300	2011-2013	**FL**
BEVERLY SPORT TOURING	350	2011-2014	**FL**

Le immagini hanno il solo scopo di presentare i prodotti.
The images used are aimed at presenting the products only.

FL > pastiglia anteriore sinistra / front left pad
FR > pastiglia anteriore destra / front right pad
R > pastiglia posteriore / rear pad

856

CM44
- Sinterizzata off-road
- Offroad sintered pad

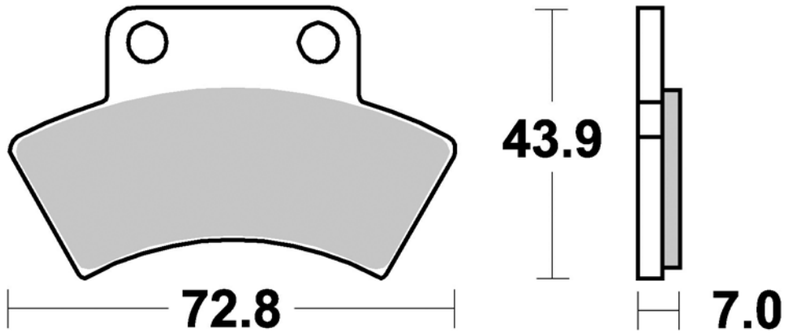

MODELLO MODEL	CC	ANNO YEAR	POSIZIONE POSITION
POLARIS			
250 L 2x4	250	1990-1993	R
250 L 4x4	250	1990-1993	R
BIG BOSS 4x6	250	1989-1992	R
BIG BOSS 6x6	250	1991-1993	R
TRAIL BLAZER	250	1990-1998	R
TRAIL BOSS	250	1991-1999	R
TRAIL BOSS 2x4	250	1988-1992	R
TRAIL BOSS 4x4	250	1988-1992	R
300 2x4	300	1994-1995	R
300 4x4	300	1994-1995	R
BIG BOSS 6x6	300	1994	R
XPLORER 4x4	300	1996-2000	R
XPRESS 2x4	300	1996-2000	R
XPRESS L	300	1996-1997	R
350 L 2x4	350	1990-1994	R
350 L 2x4	350	1994	R
350 L 4x4	350	1994	R

MODELLO MODEL	CC	ANNO YEAR	POSIZIONE POSITION
BIG BOSS L	350	1993	R
SPORTSMAN 4x4	350	1993	R
TRAIL BOSS L 2x4	350	1991-1993	R
TRAIL BOSS L 4x4	350	1991	R
400 L 2x4	400	1994-1995	R
400 L 4x4	400	1994-1995	R
SCRAMBLER L 4x4	400	1995-1997	R
SPORT L	400	1994-1999	R
SPORTSMAN L 4x4	400	1994-1997	R
XPLORER L 4x4	400	1995-1998	R
XPRESS L	400	1996-1997	R
MAGNUM 2x4	425	1995-1998	R
MAGNUM 4x4	425	1995-1998	R
SCRAMBLER 4x4	500	1997	R
SPORTSMAN 4x4	500	1998-2000	R
SPORTSMAN 6x6	500	1996-1999	R
XPLORER 4x4	500	1997	R

857

CM44
- Sinterizzata off-road
- Offroad sintered pad

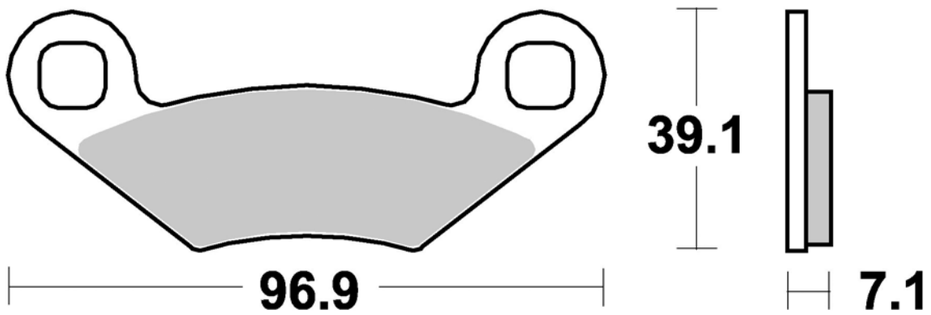

MODELLO MODEL	CC	ANNO YEAR	POSIZIONE POSITION
POLARIS			
PHOENIX	200	2005	FL/FR
250 L 2x4	250	1990-1993	FL/FR
250 L 4x4	250	1990-1993	FL/FR
BIG BOSS 4x6	250	1989-1992	FL/FR
BIG BOSS 6x6	250	1991-1993	FL/FR
TRAIL BLAZER	250	1990-2006	FL/FR
TRAIL BOSS	250	1991-1999	FL/FR
TRAIL BOSS 2x4	250	1988-1992	FL/FR
TRAIL BOSS 4x4	250	1988-1992	FL/FR
XPLORER 4x4	250	2000	FL/FR
300 2x4	300	1994-1995	FL/FR
300 4x4	300	1994-1995	FL/FR
BIG BOSS 6x6	300	1994	FL/FR
HAWKEYE 2x4	300	2007-2009	FL/FR
HAWKEYE 2x4	300	2007-2009	R
HAWKEYE 4x4	300	2007	FL/FR
HAWKEYE 4x4	300	2007	R

MODELLO MODEL	CC	ANNO YEAR	POSIZIONE POSITION
SPORTSMAN	300	2008-2010	FL/FR
SPORTSMAN	300	2008-2010	R
XPLORER 4x4	300	1996-2000	FL/FR
XPRESS 2x4	300	1996-2000	FL/FR
XPRESS L	300	1996-1997	FL/FR
MAGNUM 2x4	325	2000	FL/FR
MAGNUM 2x4 HDS	325	2002	FL/FR
MAGNUM 2x4 MOSE	325	2001	FL/FR
MAGNUM 4x4	325	2000	FL/FR
MAGNUM 4x4 HDS	325	2002	FL/FR
MAGNUM 4x4 MOSE	325	2001	FL/FR
TRAIL BOSS	325	2000-2002	FL/FR
XPEDITION	325	2000-2002	FL/FR
ATP 4x4	330	2004-2005	FL/FR
ATP 4x4	330	2004-2005	R
MAGNUM 2x4	330	2003-2006	FL/FR
MAGNUM 4x4	330	2003-2004	FL/FR
TRAIL BLAZER	330	2008-2012	FL/FR

MODELLO MODEL	CC	ANNO YEAR	POSIZIONE POSITION
TRAIL BOSS	330	2003-2012	FL/FR
SPORTSMAN 4x4	335	1999-2000	FL/FR
SPORTSMAN/WORKER 4x4	335	1999-2000	FL/FR
350 L 2x4	350	1990-1994	FL/FR
350 L 2x4	350	1994	FL/FR
350 L 4x4	350	1994	FL/FR
BIG BOSS L	350	1993	FL/FR
SPORTSMAN 4x4	350	1993	FL/FR
TRAIL BOSS L 2x4	350	1991-1993	FL/FR
TRAIL BOSS L 4x4	350	1991	FL/FR
400 L 2x4	400	1994-1995	FL/FR
400 L 4x4	400	1994-1995	FL/FR
BIG BOSS L 6x6	400	1994-1997	FL/FR
SCRAMBLER 2x4	400	2000-2002	FL/FR
SCRAMBLER 4x4	400	1998-2002	FL/FR
SCRAMBLER L 4x4	400	1995-1997	FL/FR
SPORT L	400	1994-1999	FL/FR
SPORTSMAN	400	1994-2005	FL/FR
SPORTSMAN HO 4x4	400	2008-2010	R
SPORTSMAN HO 4x4	400	2008-2012	FL/FR
SPORTSMAN L 4x4	400	1994-1997	FL/FR
TRAIL BLAZER	400	2003	FL/FR
XPLORER L 4x4	400	1995-2002	FL/FR
XPRESS L	400	1996-1997	FL/FR
MAGNUM 2x4	425	1995-1998	FL/FR
MAGNUM 4x4	425	1995-1998	FL/FR
MAGNUM 6x6	425	1996-1997	FL/FR
XPEDITION 4x4	425	2000	FL/FR
DIESEL 4x4	450	1999-2001	FL/FR
OUTLAW MXR	450	2009-2010	R
OUTLAW S	450	2008	R
SPORTSMAN	450	2006-2007	FL/FR
ATP HO	500	2004-2005	FL/FR
ATP HO	500	2004-2005	R
ATV PRO 4x4	500	2002	FL/FR
BIG BOSS 6x6	500	1998-1999	FL/FR
MAGNUM 2x4	500	2002	FL/FR
MAGNUM 4x4	500	2000-2002	FL/FR

MODELLO MODEL	CC	ANNO YEAR	POSIZIONE POSITION
MAGNUM 4x4 HDS	500	2002-2003	FL/FR
OUTLAW IRS	500	2006-2007	FL/FR
OUTLAW IRS	500	2006-2007	R
PREDATOR	500	2003-2007	FL/FR
PREDATOR	500	2003-2007	R
RANGER 6x6	500	2000	FL/FR
SCRAMBLER 2x4	500	2001-2002	FL/FR
SCRAMBLER 2x4	500	2007-2008	FL/FR
SCRAMBLER 4x4	500	1997-2012	FL/FR
SPORTSMAN 4x4	500	1998-2000	FL/FR
SPORTSMAN 6x6	500	1996-2008	FL/FR
SPORTSMAN EBS 4x4	500	1998-2002	FL/FR
SPORTSMAN EFI QUAD H.O.	500	2008-2011	FL/FR
SPORTSMAN FOREST	500	2012	FL/FR
SPORTSMAN HO	500	2009-2012	FL/FR
SPORTSMAN HO/EFI	500	2003-2008	FL/FR
SPORTSMAN TOURING H.O.	500	2008-2011	R
SPORTSMAN TOURING H.O.	500	2008-2012	FL/FR
SPORTSMAN X2	500	2006-2008	FL/FR
SPORTSMAN X2 EFI	500	2007-2009	FL/FR
SPORTSMAN X2 EFI	500	2007-2009	R
XPLORER 4x4	500	1997	FL/FR
OUTLAW IRS	525	2008-2011	R
OUTLAW S	525	2008-2010	R
SPORTSMAN	600	2003-2005	FL/FR
SPORTSMAN	700	2002-2007	FL/FR
SPORTSMAN MV	700	2005-2006	FL/FR
SPORTSMAN X2	700	2008	FL/FR
SPORTSMAN X2	700	2008	R
SPORTSMAN	800	2005-2012	FL/FR
SPORTSMAN BIG BOSS/EFI 6x6	800	2009-2012	FL/FR
SPORTSMAN EFI	800	2005-2012	FL/FR
SPORTSMAN EFI HO	800	2007-2011	FL/FR
SPORTSMAN TOURING EFI	800	2008-2009	FL/FR
SPORTSMAN TOURING EFI	800	2008-2009	R
SPORTSMAN X2 EFI	800	2007-2009	FL/FR
SPORTSMAN X2 EFI	800	2007-2009	R

860

CM44
- Sinterizzata off-road
- Offroad sintered pad

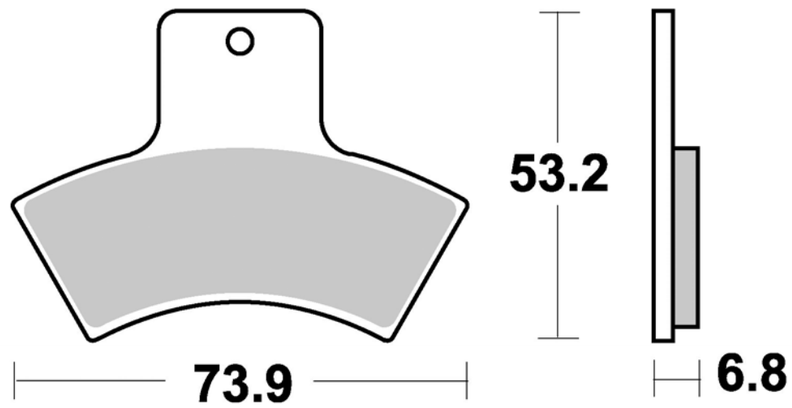

MODELLO MODEL	CC	ANNO YEAR	POSIZIONE POSITION
POLARIS			
TRAIL BLAZER	250	1999-2006	R
XPLORER 4x4	250	2000	R
MAGNUM 2x4	325	2000	R
MAGNUM 2x4 MOSE	325	2001	R
MAGNUM 4x4	325	2000	R
MAGNUM 4x4 MOSE	325	2001	R
TRAIL BOSS	325	2000-2002	R
XPEDITION	325	2000-2001	R
TRAIL BOSS	330	2003-2004	R
SPORTSMAN 4x4	335	1999-2000	R
SPORTSMAN/WORKER 4x4	335	1999-2000	R
BIG BOSS L 6x6	400	1994-1997	R

MODELLO MODEL	CC	ANNO YEAR	POSIZIONE POSITION
SCRAMBLER 2x4	400	2000-2002	R
SCRAMBLER 4x4	400	1998-2002	R
SPORTSMAN	400	1994-2002	R
TRAIL BLAZER	400	2003	R
XPLORER L 4x4	400	1999-2002	R
MAGNUM 6x6	425	1996-1997	R
XPEDITION 4x4	425	2000	R
DIESEL 4x4	450	1999-2001	R
BIG BOSS 6x6	500	1998-1999	R
MAGNUM 4x4	500	2000-2002	R
SCRAMBLER 2x4	500	2001-2002	R
SCRAMBLER 4x4	500	1998-2004	R
SPORTSMAN EBS 4x4	500	1998-2002	R

Le immagini hanno il solo scopo di presentare i prodotti.
The images used are aimed at presenting the products only.

FL > pastiglia anteriore sinistra / front left pad
FR > pastiglia anteriore destra / front right pad
R > pastiglia posteriore / rear pad

862

SM1
- Semimetallica polivalente
- Semi-metallic pad

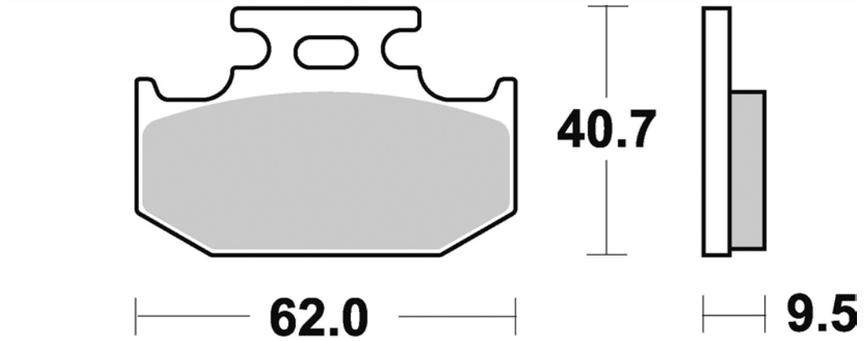

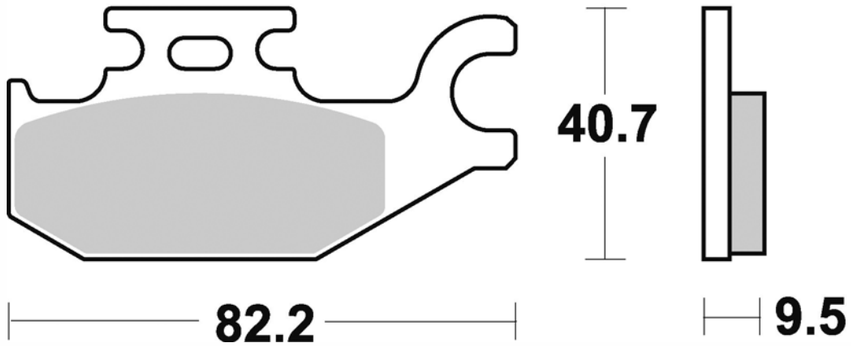

MODELLO MODEL	CC	ANNO YEAR	POSIZIONE POSITION
BENELLI			
CAFFE NERO	250	2008	**FL/FR**
SUZUKI			
BURGMAN	125	2007-2012	**R**
BURGMAN	125	2014	**R**
BURGMAN ABS	125	2014	**R**
SIXTEEN	125	2008-2011	**R**
SIXTEEN	150	2008-2011	**R**
BURGMAN	200	2007-2014	**R**
BURGMAN ABS	200	2014	**R**

867

SM1
- Semimetallica polivalente
- Semi-metallic pad

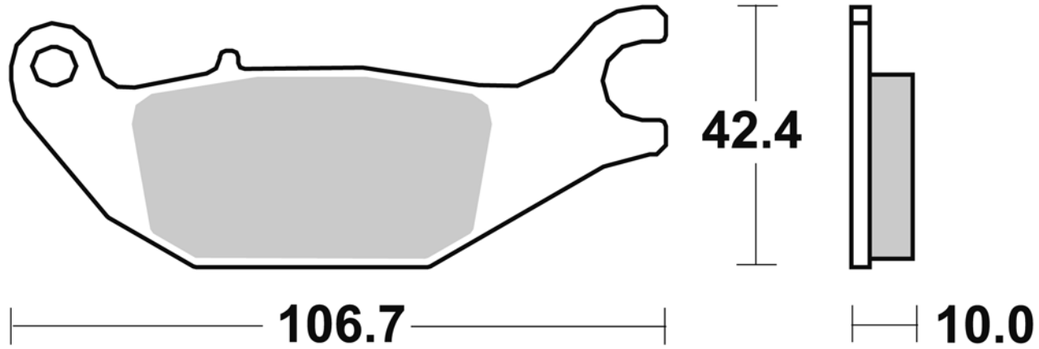

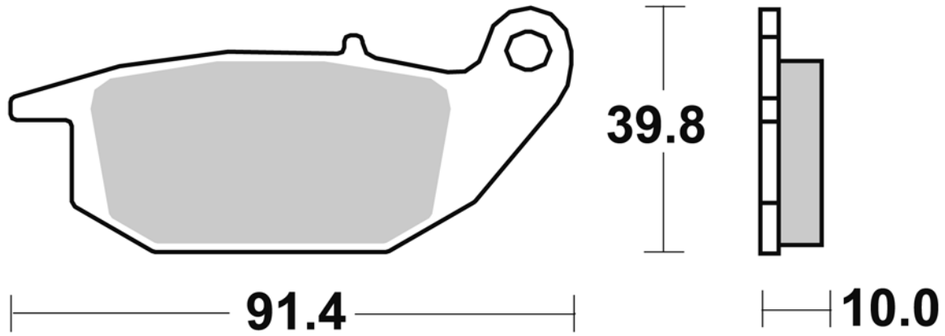

MODELLO MODEL	CC	ANNO YEAR	POSIZIONE POSITION
HONDA			
CBR R	125	2003-2011	**R**
XLV VARADERO	125	2001-2011	**R**

868

SM1
- Semimetallica polivalente
- Semi-metallic pad

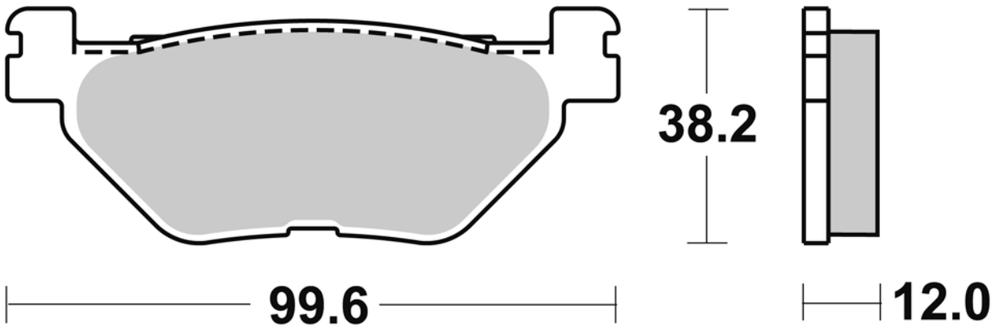

MODELLO MODEL	CC	ANNO YEAR	POSIZIONE POSITION
SYM			
VOYAGER	250	2005	**R**

MODELLO MODEL	CC	ANNO YEAR	POSIZIONE POSITION
YAMAHA			
XP T-MAX	500	2001-2003	**R**
XVS A MIDNIGHT STAR	950	2009-2013	**R**
XT Z SUPER TENERE	1200	2010-2014	**R**
XT ZE SUPER TENERE	1200	2014	**R**

Le immagini hanno il solo scopo di presentare i prodotti.
The images used are aimed at presenting the products only.

FL > pastiglia anteriore sinistra / front left pad
FR > pastiglia anteriore destra / front right pad
R > pastiglia posteriore / rear pad

869

SM1
- Semimetallica polivalente
- Semi-metallic pad

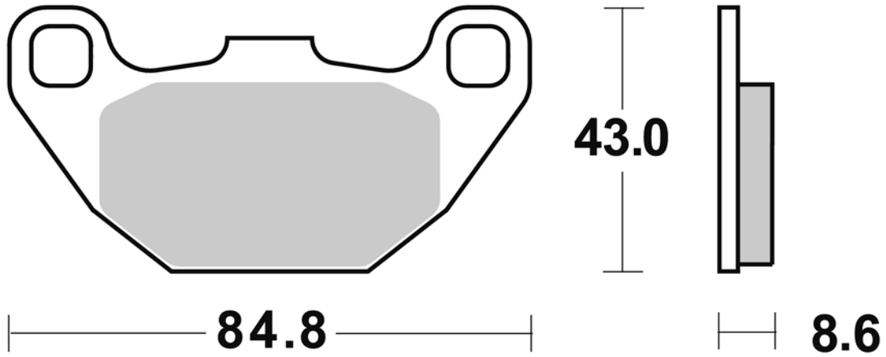

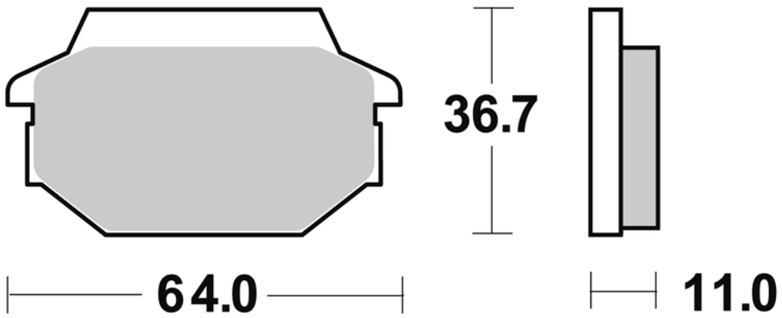

MODELLO MODEL	CC	ANNO YEAR	POSIZIONE POSITION
KYMCO			
AGILITY 2T R16 (Rear Drum Model)	50	2008-2014	FL
AGILITY 4T R16 (Rear Drum Model)	50	2008-2014	FL
AGILITY CARRY (Rear Drum Model)	50	2011-2013	FL
LIKE 2T (Rear Drum Model)	50	2009	FL
LIKE 4T (Rear Drum Model)	50	2009	FL
MXER	50	2003	FL/FR
MXU	50	2005	FL/FR
PEOPLE	50	1999-2011	FL
PEOPLE S 2T	50	2005-2010	FL
PEOPLE S 4T	50	2006-2011	FL
SUPER 8 2T (Rear Drum Model)	50	2009-2014	FL
SUPER 8 4T (Rear Drum Model)	50	2009-2014	FL
SUPER 9 LC	50	2002-2007	R
YUP NEW CLASSIC	50	2001	FL
AGILITY CARRY (Rear Drum Model)	125	2011-2012	FL
AGILITY R16	125	2008-2014	FL
AGILITY R16 PLUS	125	2014	FL
AGILITY RS (Rear Drum Model)	125	2009-2010	FL
LIKE	125	2009	FL
LOOKER S	125	2007-2008	FL
MXER	125	2002-2007	R

MODELLO MODEL	CC	ANNO YEAR	POSIZIONE POSITION
PEOPLE (Rear Drum Model)	125	1999-2014	FL
PEOPLE ONE (Rear Drum Model)	125	2013-2014	FL
PEOPLE S (Rear Drum Model)	125	2005-2006	FL
PEOPLE S DD	125	2007-2014	FL
SUPER 8	125	2008-2010	FL
SUPER 9	125	2000	R
AGILITY R16	150	2008-2012	FL
MXER	150	2002-2007	R
MXU	150	2005	FL/FR
PEOPLE	150	1999-2004	FL
AGILITY R16	200	2009-2014	FL
AGILITY R16i PLUS	200	2014	FL
LIKE	200	2009	FL
PEOPLE S	200	2007-2014	FL
PEOPLE S (Rear Drum Model)	200	2005-2006	FL
SUPER 9	250	2000	R
SYM			
HD	125	2004-2007	FL
JOYRIDE	125	2001-2004	R
JOYRIDE	150	2001-2002	R
HD	200	2004-2007	FL
JOYRIDE	200	2001-2006	R

870

CM66
- Semimetallica uso racing
- Semi-metallic pad racing use only

CM55
- Sinterizzata stradale ant. uso sportivo
- Front sintered pad

SM1
- Semimetallica polivalente
- Semi-metallic pad

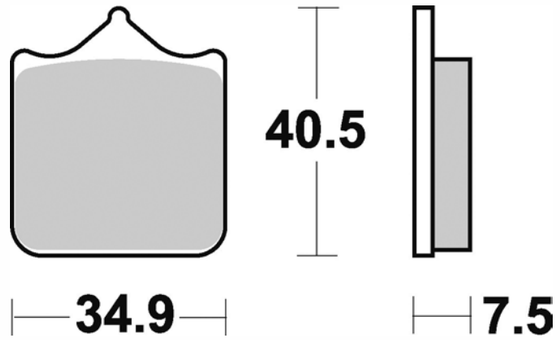

MODELLO MODEL	CC	ANNO YEAR	POSIZIONE POSITION
APRILIA			
RSV	1000	2001-2003	FL/FR
RSV FACTORY	1000	2003-2007	FL/FR
RSV R	1000	2001-2008	FL/FR
TUONO	1000	2002-2005	FL/FR
TUONO R (4 pads per caliper)	1000	2003-2005	FL/FR
BENELLI			
TORNADO TRE	900	2003-2006	FL/FR
TORNADO TRE RS	900	2004-2006	FL/FR
CAFE RACER	1130	2005-2007	FL/FR
TITANIUM	1130	2005-2007	FL/FR
TNT RS	1130	2005-2007	FL/FR
TORNADO	1130	2006	FL/FR
BIMOTA			
DB5 MILLE	1000	2005-2006	FL/FR
DB6 DELIRIO	1000	2006	FL/FR
SB8K SANTAMONICA	1000	2006	FL/FR
DERBI			
MULHACEN	659	2005-2008	FL
DUCATI			
749	748	2002-2007	FL/FR
748 R	748	2001-2002	FL/FR
749 R	748	2004-2007	FL/FR
749 S	748	2003-2007	FL/FR
996 R	996	2001	FL/FR
998 R	998	2002-2003	FL/FR
998 S (four pads)	998	2002-2003	FL/FR
998 S (four pads)	998	2002-2003	FR
999 BIPOSTO	998	2002-2006	FL/FR
999 R	998	2002-2007	FL/FR
999 S	998	2002-2007	FL/FR
S4R Testastretta MONSTER	1000	2007-2008	FL/FR
S4RS Testastretta MONSTER	1000	2006-2008	FL/FR
HUSQVARNA			
SMR	449	2011-2012	FL
SMR	450	2005-2010	FL
SMR - RR	450	2006-2008	FL
SMR	510	2005-2010	FL

MODELLO MODEL	CC	ANNO YEAR	POSIZIONE POSITION
SMR	511	2011-2012	FL
SM	610	2005-2006	FL
SM S ie	610	2007-2008	FL
KTM			
DUKE	690	2008-2011	FL
DUKE R	690	2010-2011	FL
SMC	690	2008-2011	FL
SMC R	690	2012-2014	FL
SUPERMOTO PRESTIGE	690	2007-2008	FL
SUPERMOTO R	690	2008	FL
SUPERMOTO	950	2005-2007	FL/FR
SUPERMOTO R	950	2006-2008	FL/FR
SM T	990	2009-2013	FL/FR
SUPER DUKE	990	2005-2011	FL/FR
SUPER DUKE R	990	2007-2013	FL/FR
SUPERMOTO	990	2007-2012	FL/FR
MONDIAL			
EVO	1000	2004-2006	FL/FR
PIEGA	1000	2003	FL/FR
MV AGUSTA			
BRUTALE R	910	2006-2008	FL/FR
F4 312 R	1000	2007	FL/FR
F4 312 RR	1000	2007-2008	FL/FR
F4 R	1000	2006-2007	FL/FR
F4 SENNA	1000	2006	FL/FR
F4 TAMBURINI	1000	2006-2008	FL/FR
SHERCO			
4.5i 4T SM	450	2005-2010	FL
TM			
SMM F	250	2010-2011	FL
SMR F	250	2010-2011	FL
SMR F	450	2010-2011	FL
SMX F	450	2004-2011	FL
SMR F	530	2010-2011	FL
SMX F	530	2005-2011	FL
SMX F	660	2004-2010	FL
TRIUMPH			
SPEED TRIPLE	1050	2008-2013	FL/FR
SPEED TRIPLE ABS	1050	2011	FL/FR

Le immagini hanno il solo scopo di presentare i prodotti.
The images used are aimed at presenting the products only.

FL > pastiglia anteriore sinistra / front left pad
FR > pastiglia anteriore destra / front right pad
R > pastiglia posteriore / rear pad

871

SM1
- Semimetallica polivalente
- Semi-metallic pad

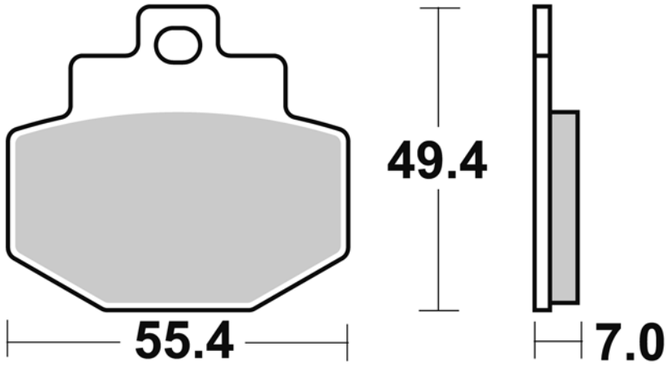

MODELLO MODEL	CC	ANNO YEAR	POSIZIONE POSITION
BENELLI			
ADIVA	150	2000	R
GILERA			
RUNNER VXR 4t (Grimeca)	125	2001-2003	R
RUNNER VXR 4t (Hengtong)	125	2001-2007	R
RUNNER VXR 4t (Grimeca)	180	2001-2005	R
RUNNER VXR 4t	200	2006	R
RUNNER VXR 4t (Grimeca)	200	2002-2005	R
RUNNER VXR 4t (Hengtong)	200	2002-2005	R
PIAGGIO			
SUPER HEXAGON GTX (12 WHEELS)	125	2001-2003	R
SUPER HEXAGON GTX (grimeca caliper)	125	2000	R
SUPER HEXAGON GTX (heng tong caliper)	125	2000	R
VESPA GRANTURISMO (Grimeca caliper)	125	2003-2006	R
VESPA GRANTURISMO (Heng Tong caliper)	125	2003-2007	R
VESPA GTS	125	2007-2011	R
VESPA GTS 4T SUPER	125	2009-2013	R

MODELLO MODEL	CC	ANNO YEAR	POSIZIONE POSITION
VESPA GTV 4T NAVY	125	2008	R
SUPER HEXAGON GTX	150	2000	R
SUPER HEXAGON GTX (12 WHEELS)	180	2001-2003	R
SUPER HEXAGON GTX (grimeca caliper)	180	2000	R
SUPER HEXAGON GTX (heng tong caliper)	180	2000	R
VESPA GT L GRANTURISMO (Grimeca cal.)	200	2003-2006	R
VESPA GT L GRANTURISMO (Heng Tong cal.)	200	2003-2006	R
SUPER HEXAGON GT-GTX	250	2000	R
VESPA GT 60	250	2006-2007	R
VESPA GTS	250	2005-2013	R
VESPA GTS ABS	250	2005-2012	R
VESPA GTV	250	2006-2009	R
VESPA GTV 4T NAVY	250	2008	R
VESPA GTS IE	300	2012-2014	R
VESPA GTS IE TOURING	300	2011	R
VESPA GTS SUPER	300	2008-2013	R
VESPA GTS SUPER SPORT	300	2010-2013	R

873

CM44
- Sinterizzata off-road
- Offroad sintered pad

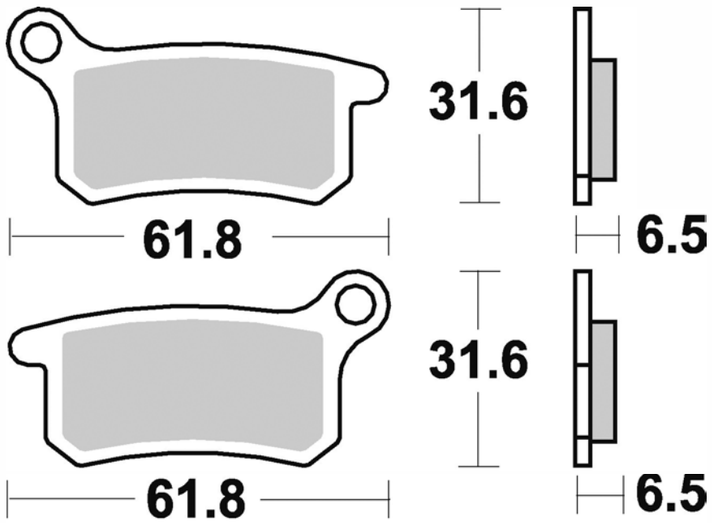

MODELLO MODEL	CC	ANNO YEAR	POSIZIONE POSITION
HUSQVARNA			
CR	65	2011-2012	FR
KTM			
SX	65	2002-2014	FL
SX	65	2009-2014	R
XC	65	2008	FL
SX	85	2003-2010	R

MODELLO MODEL	CC	ANNO YEAR	POSIZIONE POSITION
SX	85	2003-2011	FL
XC	85	2007-2009	FL
XC	85	2007-2009	R
SX	105	2004-2008	FL
SX	105	2004-2008	R
XC	105	2008	FL
XC	105	2008	R

875

CM56
- Sinterizzata stradale post. uso sportivo
- Rear sintered pad

SM1
- Semimetallica polivalente
- Semi-metallic pad

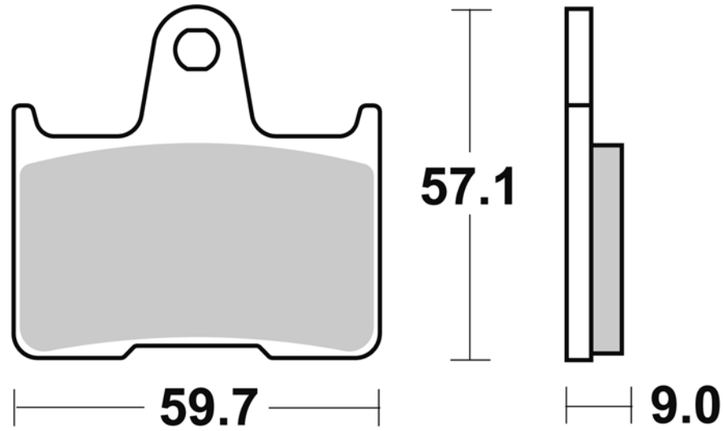

MODELLO MODEL	CC	ANNO YEAR	POSIZIONE POSITION
HONDA			
CB	1284	1998-2002	R
KAWASAKI			
ZX7RR NINJA	750	1996-2003	R
GTR	1400	2007-2014	R
ZZR	1400	2006-2007	R
ZZR ABS	1400	2008-2014	R

MODELLO MODEL	CC	ANNO YEAR	POSIZIONE POSITION
MZ			
1000 SN- SF	1000	2005	R
SUZUKI			
GSX R	600	2004-2005	R
GSF BANDIT	650	2005	R
GSX R	750	2004-2005	R
GSX R	1000	2001-2006	R
GSX	1400	2002-2007	R

878

SM1
- Semimetallica polivalente
- Semi-metallic pad

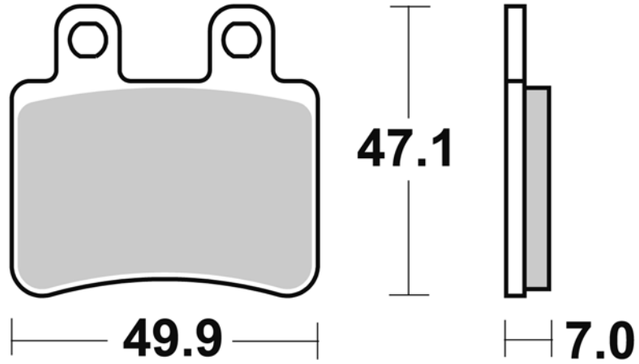

MODELLO MODEL	CC	ANNO YEAR	POSIZIONE POSITION
DERBI			
SENDA DRD EVO SM	50	2008-2011	R
SENDA DRD PRO R	50	2005-2012	R
BOULEVARD (Rear Drum Model)	125	2004-2007	FL
CROSS CITY	125	2007-2008	R
GP1 RACING LOW SEAT	125	2007-2009	R
SENDA BAJA R Enduro	125	2009-2012	R
SENDA BAJA SM	125	2006-2012	R
SENDA SM 4t	125	2004-2007	R
BOULEVARD (Rear Drum Model)	150	2004-2007	FL
BOULEVARD (Rear Drum Model)	200	2005	FL
GP1 RACING LOW SEAT	250	2007-2009	R
HONDA-HM			
CR E	50	2002	R
CR E DERAPAGE	50	2003-2005	R
CRE BAJA	50	2003-2009	R
CRE DERAPAGE	50	2003-2009	R
CRE SIX	50	2003-2009	R
MALAGUTI			
XSM	50	2003	R

MODELLO MODEL	CC	ANNO YEAR	POSIZIONE POSITION
MBK			
X-LIMIT ENDURO	50	2003-2010	FL
X-LIMIT ENDURO	50	2003-2010	R
X-LIMIT SUPERMOTO	50	2003-2010	R
PEUGEOT			
ELYSEO	125	2000	R
GEOPOLIS	125	2008-2009	R
JET FORCE	125	2003	R
LOOXOR	125	2005	R
SATELIS	125	2004-2008	R
SATELIS ABS	125	2004-2008	R
ELYSEO	150	2000	R
ELYSTAR	150	2003	R
GEOPOLIS	250	2006-2009	R
SATELIS (AJP caliper)	250	2007-2011	R
GEOPOLIS	400	2008-2009	R
SATELIS ABS	600	2004	R
YAMAHA			
XT R	125	2005-2009	FL
XT R	125	2005-2009	R
XT X SM	125	2005-2009	R

Le immagini hanno il solo scopo di presentare i prodotti.
The images used are aimed at presenting the products only.

FL > pastiglia anteriore sinistra / front left pad
FR > pastiglia anteriore destra / front right pad
R > pastiglia posteriore / rear pad

879

CM55
- Sinterizzata stradale ant. uso sportivo
- Front sintered pad

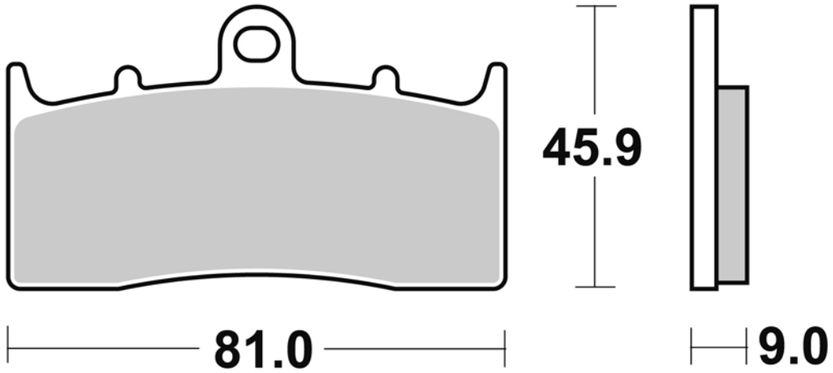

MODELLO MODEL	CC	ANNO YEAR	POSIZIONE POSITION
BMW			
R 850 R	850	2004-2007	**FL/FR**
R 1150 R	1150	2001-2006	**FL/FR**
R 1150 R ROCKSTER	1150	2003-2006	**FL/FR**
R 1150 RS	1150	2001-2005	**FL/FR**
K 1200 LT ABS	1200	2001-2009	**FL/FR**

MODELLO MODEL	CC	ANNO YEAR	POSIZIONE POSITION
R 1200 CL	1200	2002-2006	**FL/FR**
R 1200 R	1200	2006-2013	**FL/FR**
R 1200 S	1200	2006-2008	**FL/FR**
K 1300 R - ABS	1300	2008-2014	**FL/FR**
K 1600 GT	1600	2011-2014	**FL/FR**
K 1600 GTL	1600	2011-2014	**FL/FR**

883

SM1
- Semimetallica polivalente
- Semi-metallic pad

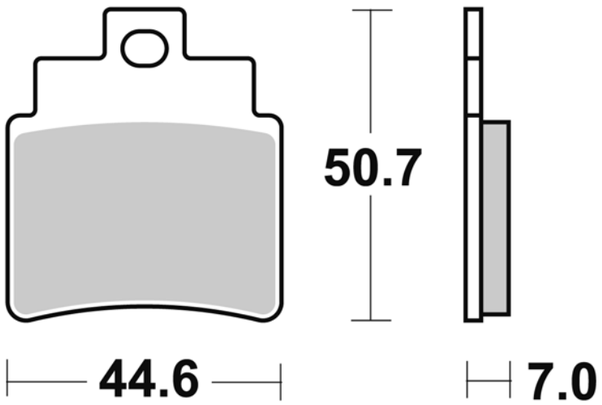

MODELLO MODEL	CC	ANNO YEAR	POSIZIONE POSITION
KYMCO			
GRAND DINK	250	2001-2006	**FR**
KXR	250	2004-2007	**R**
MXU	250	2006-2009	**FL/FR**
URBAN QUAD	250	2006	**R**

MODELLO MODEL	CC	ANNO YEAR	POSIZIONE POSITION
MAXXER	300	2006-2011	**R**
SYM			
JOYMAX	250	2003-2009	**FL**
VOYAGER	250	2005	**FL**
JOYMAX	300	2008-2009	**FL**

884

SM1
- Semimetallica polivalente
- Semi-metallic pad

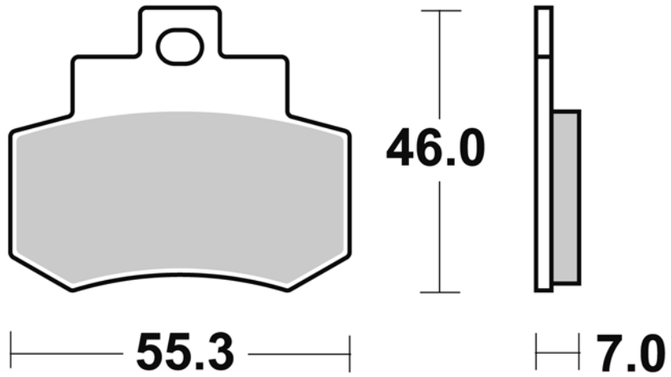

MODELLO MODEL	CC	ANNO YEAR	POSIZIONE POSITION
KYMCO			
GRAND DINK	250	2001-2006	**R**

MODELLO MODEL	CC	ANNO YEAR	POSIZIONE POSITION

886

CM46
- Sinterizzata off-road uso racing
- Offroad sintered pad racing use

CM44
- Sinterizzata off-road
- Offroad sintered pad

SM1
- Semimetallica polivalente
- Semi-metallic pad

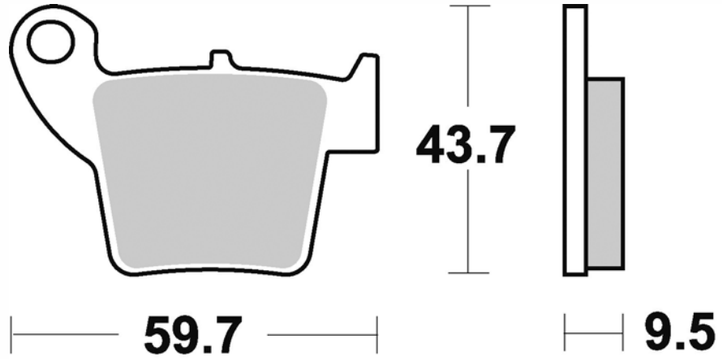

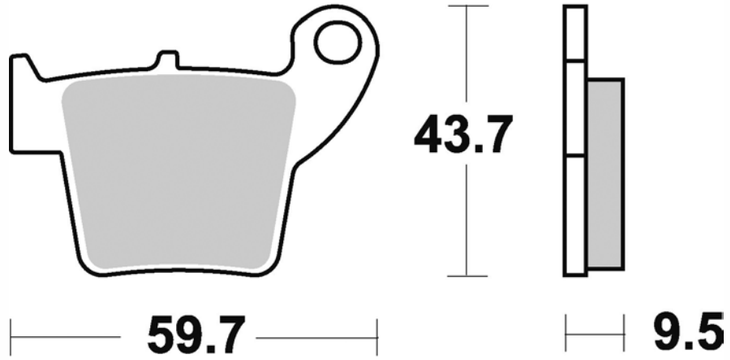

MODELLO MODEL	CC	ANNO YEAR	POSIZIONE POSITION
HONDA			
CR E	125	2002-2008	**R**
CR R	125	2002-2008	**R**
CRF R	150	2007-2013	**R**
CRF RB	150	2007-2013	**R**
CR E	250	2002-2008	**R**
CR R	250	2002-2008	**R**

MODELLO MODEL	CC	ANNO YEAR	POSIZIONE POSITION
CRF R	250	2004-2014	**R**
CRF R	250	2004-2013	**R**
CRF X	250	2004-2007	**R**
CRF X	250	2008-2009	**R**
CRF X	250	2012	**R**
CRF R	450	2002-2014	**R**
CRF X	450	2004-2005	**R**

Le immagini hanno il solo scopo di presentare i prodotti.
The images used are aimed at presenting the products only.

FL > pastiglia anteriore sinistra / front left pad
FR > pastiglia anteriore destra / front right pad
R > pastiglia posteriore / rear pad

MODELLO MODEL	CC	ANNO YEAR	POSIZIONE POSITION
CRF X	450	2006-2009	**R**
CRF X	450	2012	**R**
HONDA-HM			
CRE BAJA RR	50	2007-2009	**R**
CRE DERAPAGE RR	50	2007-2009	**R**
CRE SIX COMPETITION	50	2007-2009	**R**
CRM DERAPAGE COMPETITION	50	2007-2009	**R**
CR E SUPERMOTARD	125	2002-2008	**R**
CR SUPERMOTARD	125	2004-2006	**R**
CRE BAJA RR 2T	125	2011	**R**
CRE F X	125	2008-2009	**R**
CRE R ENDURO	125	2002-2007	**R**
CRE R SUPERMOTARD	125	2002-2006	**R**
CRE SIX COMPETITION 2T	125	2011	**R**
CRM DERAPAGE COMPETITION 2T	125	2011	**R**
CRM DERAPAGE RR 2T	125	2011	**R**
CRM F X	125	2008-2009	**R**
CRM R SUPERMOTO	125	2007	**R**
CRF R	150	2007-2009	**R**
CRF ENDURO	230	2004-2010	**R**
CRF MOTARD	230	2004-2010	**R**
CRF SUPERMOTARD	230	2004-2010	**R**
CRF TRIAL	230	2004-2010	**R**
CR E SUPERMOTARD	250	2002-2009	**R**
CR R	250	2004	**R**
CRE	250	2002	**R**
CRE F	250	2004-2009	**R**
CRE F 250 R	250	2004-2009	**R**

MODELLO MODEL	CC	ANNO YEAR	POSIZIONE POSITION
CRE F 250 X	250	2008-2011	**R**
CRE R ENDURO	250	2002-2007	**R**
CRE R SUPERMOTARD	250	2002-2003	**R**
CRE X	250	2004-2009	**R**
CRF F	250	2004-2009	**R**
CRF MOTARD	250	2004-2006	**R**
CRF R	250	2008-2013	**R**
CRF R SUPERMOTARD	250	2004-2008	**R**
CRF X SUPERMOTARD	250	2004-2008	**R**
CRM X SUPERMOTO	250	2007	**R**
CRE F 290 C	290	2007	**R**
CRE F 300 X	300	2008-2009	**R**
CRE F	450	2002	**R**
CRE F 450 R ENDURO	450	2004-2008	**R**
CRE F 450 X	450	2004-2009	**R**
CRE F SUPERMOTO	450	2002-2003	**R**
CRE R ENDURO	450	2002-2007	**R**
CRF MOTARD	450	2004-2006	**R**
CRF R	450	2004-2014	**R**
CRF SUPERMOTARD	450	2002-2003	**R**
CRF X SUPERMOTARD	450	2004-2009	**R**
CRM F450R SUPERMOTO	450	2007-2009	**R**
CRM F450X SUPERMOTO	450	2007-2009	**R**
CRE F 490 X	490	2007	**R**
CRM F490X SUPERMOTO	490	2007	**R**
CRE F 500 X	500	2008-2009	**R**
CRM F 500 X	500	2011	**R**

887

SM1
- Semimetallica polivalente
- Semi-metallic pad

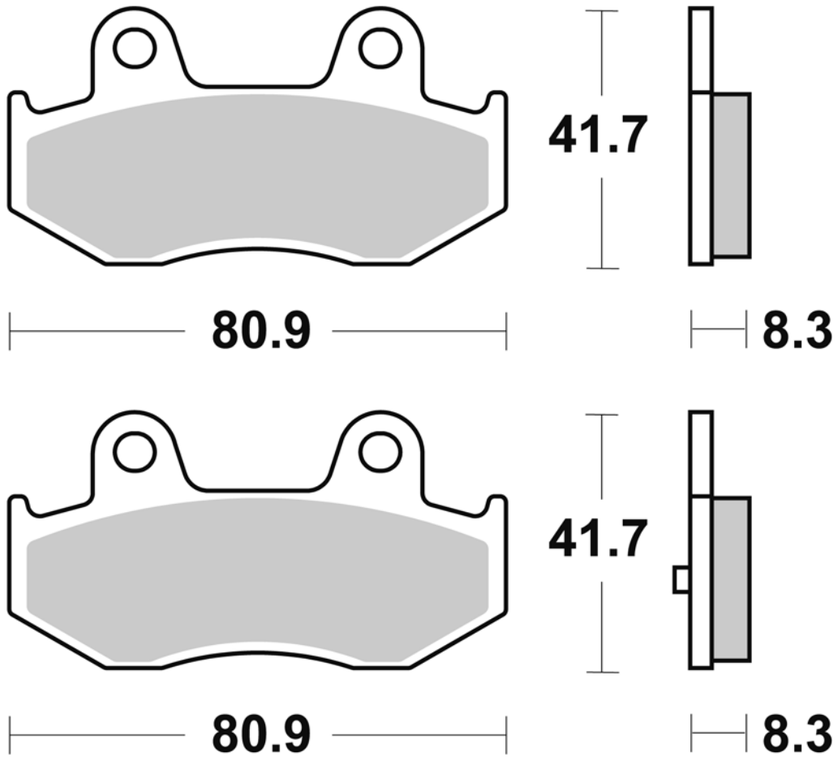

MODELLO MODEL	CC	ANNO YEAR	POSIZIONE POSITION
SUZUKI			
BURGMAN	250	1998-2006	**R**
BURGMAN	400	2001-2006	**R**

888

SM1
- Semimetallica polivalente
- Semi-metallic pad

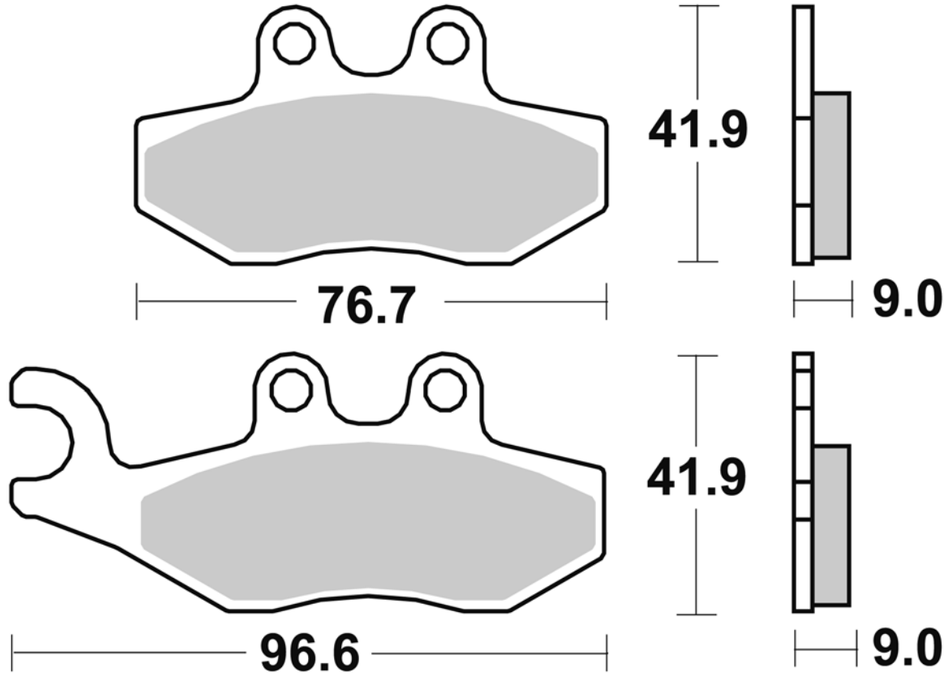

MODELLO MODEL	CC	ANNO YEAR	POSIZIONE POSITION
APRILIA			
SR MAX	125	2011-2014	**FL**
SR MAX	125	2011-2014	**R**
SR MOTARD (Rear Drum Model)	125	2012-2014	**FL**
SR MAX	300	2011-2014	**FL**
SR MAX	300	2011-2014	**R**
SRV	850	2012-2014	**R**
SRV ABS ATC	850	2012-2014	**R**
DERBI			
BOULEVARD 2T (Rear Drum Model)	50	2009-2012	**FL**
BOULEVARD 4T (Rear Drum Model)	50	2009	**FL**
VARIANT SPORT	50	2012	**FL**
BOULEVARD (Rear Drum Model)	125	2008-2012	**FL**
VARIANT SPORT	125	2012	**FL**
GILERA			
DNA (Hengtong)	50	2000-2005	**FL**
DNA (Hengtong)	125	2001-2003	**FL**
NEXUS	125	2008-2009	**FL**
NEXUS	125	2008-2009	**R**
RUNNER FX SP (Hengtong)	125	2002-2003	**FL**
RUNNER VXR 4t (Hengtong)	125	2001-2007	**FL**
DNA (Hengtong)	180	2001-2003	**FL**
RUNNER FXR SP 2t (Hengtong)	180	2002-2003	**FL**
RUNNER VXR 4t (Hengtong)	180	2001	**FL**
RUNNER VXR 4t	200	2006	**FL**
RUNNER VXR 4t (Hengtong)	200	2002-2005	**FL**
NEXUS	250	2006-2008	**FL**
NEXUS	250	2006-2008	**R**
NEXUS (Hengtong)	300	2008-2011	**FL**
NEXUS (Hengtong)	300	2008-2011	**R**
GP 800	800	2008-2012	**R**
PEUGEOT			
GEOPOLIS	125	2008-2009	**FL**
GEOPOLIS	250	2006-2009	**FL**
GEOPOLIS	400	2008-2009	**FL**
PIAGGIO			
FLY (Rear Drum Model)	50	2005-2013	**FL**
TYPHOON (2T/12 WHEELS)	50	2010-2012	**FL**
FLY 4T	100	2007-2009	**FL**
BEVERLY (heng tong caliper)	125	2002-2007	**FL**
BEVERLY (heng tong caliper)	125	2002-2007	**R**

MODELLO MODEL	CC	ANNO YEAR	POSIZIONE POSITION
BEVERLY RST 4T	125	2010-2013	**FL**
BEVERLY S	125	2007	**FL**
BEVERLY S	125	2007	**R**
BEVERLY TOURER	125	2008-2010	**FL**
BEVERLY TOURER	125	2008-2010	**R**
CARNABY	125	2007-2010	**FL**
CARNABY	125	2007-2010	**R**
FLY (Rear Drum Model)	125	2005-2013	**FL**
LIBERTY 4T (Rear Drum Model)	125	2013	**FL**
SKIPPER ST 4T (heng tong caliper)	125	2000-2004	**FL**
SUPER HEXAGON GTX (12 WHEELS)	125	2001-2003	**FL**
SUPER HEXAGON GTX (heng tong caliper)	125	2000	**FL**
TYPHOON 4T (12 WHEELS)	125	2010-2011	**FL**
VESPA GRANTURISMO (Heng Tong caliper)	125	2003-2007	**FL**
VESPA GTS	125	2007-2011	**FL**
VESPA GTS 4T SUPER	125	2009-2013	**FL**
VESPA GTV 4T NAVY	125	2008	**FL**
X EVO	125	2007-2012	**FL**
X10	125	2012-2013	**FL**
X10 EXECUTIVE	125	2012-2013	**FL**
X7	125	2008-2009	**FL**
X7 EVO	125	2009-2010	**FL**
X8	125	2004-2006	**FL**
X9 EVOLUTION (HENGTONG CALIPER)	125	2005-2007	**FL**
FLY (Rear Drum Model)	150	2005-2011	**FL**
SKIPPER ST 4T (heng tong caliper)	150	2000-2004	**FL**
X8 STREET	150	2006-2008	**FL**
SUPER HEXAGON GTX (12 WHEELS)	180	2001-2003	**FL**
SUPER HEXAGON GTX (heng tong caliper)	180	2000	**FL**
BEVERLY (heng tong caliper)	200	2002-2006	**FL**
BEVERLY (heng tong caliper)	200	2002-2006	**R**
CARNABY	200	2007-2009	**FL**
CARNABY	200	2007-2009	**R**
VESPA GT L GRANTURISMO (Heng Tong cal.)	200	2003-2006	**FL**
X8	200	2004-2005	**FL**
BEVERLY	250	2004-2007	**FL**
BEVERLY	250	2004-2007	**R**
BEVERLY CRUISER	250	2007-2009	**FL**
BEVERLY CRUISER	250	2007-2009	**R**
BEVERLY SPORT	250	2006-2008	**FL**
BEVERLY SPORT	250	2006-2008	**R**

Le immagini hanno il solo scopo di presentare i prodotti.
The images used are aimed at presenting the products only.

FL > pastiglia anteriore sinistra / front left pad
FR > pastiglia anteriore destra / front right pad
R > pastiglia posteriore / rear pad

MODELLO MODEL	CC	ANNO YEAR	POSIZIONE POSITION
BEVERLY TOURER	250	2008-2009	FL
BEVERLY TOURER	250	2008-2009	R
CARNABY	250	2008-2009	FL
CARNABY	250	2008-2009	R
VESPA GT 60	250	2006-2007	FL
VESPA GTS	250	2005-2013	FL
VESPA GTS ABS	250	2005-2012	FL
VESPA GTV	250	2006-2009	FL
VESPA GTV 4T NAVY	250	2008	FL
X EVO	250	2007-2013	FL
X7	250	2008-2009	FL
X8	250	2005-2008	FL
X9	250	2005-2006	FL
X9 EVOLUTION	250	2005-2006	FL
BEVERLY TOURER	300	2009-2010	FL
BEVERLY TOURER	300	2009-2010	R
CARNABY CRUISER	300	2009-2012	FL

MODELLO MODEL	CC	ANNO YEAR	POSIZIONE POSITION
CARNABY CRUISER	300	2009-2012	R
VESPA GTS IE	300	2012-2014	FL
VESPA GTS IE TOURING	300	2011	FL
VESPA GTS SUPER	300	2008-2013	FL
VESPA GTS SUPER SPORT	300	2010-2013	FL
VESPA GTV	300	2010-2013	FL
VESPA GTV	300	2010-2013	R
X7 EVO	300	2009-2011	FL
X10	350	2012-2013	FL
X10 EXECUTIVE	350	2012-2013	FL
BEVERLY	400	2006-2007	R
X EVO	400	2007-2011	FL
X EVO	400	2007-2011	R
X8	400	2006-2008	FL
X8	400	2006-2008	R
X10 EXECUTIVE	500	2012-2013	FL

890

CM46
- Sinterizzata off-road uso racing
- Offroad sintered pad racing use

CM44
- Sinterizzata off-road
- Offroad sintered pad

SM1
- Semimetallica polivalente
- Semi-metallic pad

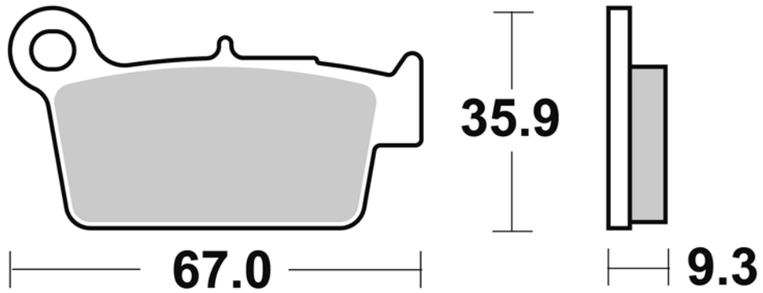

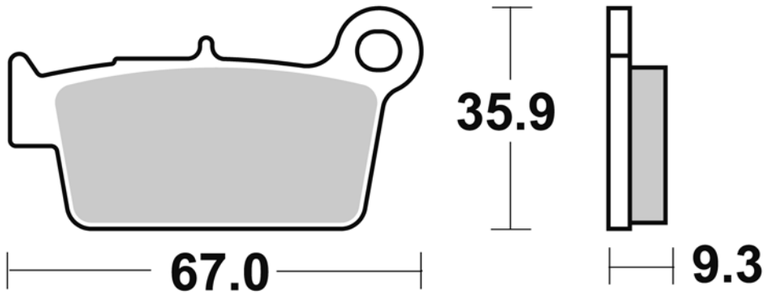

MODELLO MODEL	CC	ANNO YEAR	POSIZIONE POSITION
APRILIA			
MXV	450	2009-2010	R
RXV	450	2005-2011	R
SXV	450	2005-2011	R
RXV	550	2005-2011	R
SXV	550	2005-2011	R
BETA			
RR ENDURO	50	2008-2014	R
RR ENDURO FACTORY	50	2012-2014	R
RR ENDURO STANDARD	50	2009-2014	R
RR MOTARD STANDARD	50	2009-2014	R
ALP 4T	125	2006-2014	R
RR	125	2006-2014	R
RR SUPERMOTARD	125	2006-2014	R
URBAN	125	2008-2014	R
URBAN SPECIAL	125	2009-2014	R
ALP 4T	200	2006-2014	R
URBAN	200	2008-2014	R
URBAN SPECIAL	200	2009-2014	R
RR	250	2005-2009	R
RR 2T ENDURO	250	2013-2014	R

MODELLO MODEL	CC	ANNO YEAR	POSIZIONE POSITION
RR 2T RACING	250	2013-2014	R
RR 2T ENDURO	300	2013-2014	R
RR 2T RACING	300	2013-2014	R
RR 4T ENDURO	350	2011-2014	R
RR 4T RACING	350	2014	R
RR 4T ENDURO	400	2005-2014	R
RR 4T ENDURO	450	2005-2014	R
RR 4T RACING	450	2013-2014	R
RR CROSS COUNTRY	450	2012	R
RR 4T ENDURO	498	2012-2014	R
RR 4T RACING	498	2013-2014	R
RR 4T ENDURO	520	2010-2011	R
RR 4T ENDURO	525	2005-2009	R
FANTIC M.			
CABALLERO COMPETIZIONE	50	2006-2009	R
CABALLERO COMPETIZIONE MINI	50	2008-2009	R
GAS GAS			
EC	125	2010-2011	R
EC RACING	125	2013-2014	R
EC	200	2009-2011	R
EC	200	2009-2014	R

MODELLO MODEL	CC	ANNO YEAR	POSIZIONE POSITION
EC	250	2010	R
EC 2T	250	2011-2013	R
EC 2T	250	2011-2014	R
EC 4T	250	2011-2014	R
EC F RACING	250	2013-2014	R
EC RACING	250	2012-2013	R
EC RACING	250	2012	R
EC	300	2010-2012	R
EC 2T	300	2013	R
EC 2T	300	2013-2014	R
EC F RACING	300	2013-2014	R
EC RACING	300	2012-2013	R
EC F	450	2013-2014	R
KAWASAKI			
KX F	250	2004-2015	R
KLX R	450	2007-2014	R
KX F	450	2006-2015	R
SHERCO			
4.5i 4T SM	450	2005-2010	R
SUZUKI			
RMZ	250	2004-2015	R
RMX	450	2010-2012	R
RMZ	450	2005-2015	R
TM			
EN	125	2005-2014	R
MX	125	2005-2014	R
MX	125	2005-2011	R
EN	144	2008-2014	R
MX	144	2007-2014	R

MODELLO MODEL	CC	ANNO YEAR	POSIZIONE POSITION
EN	250	2005-2014	R
EN F	250	2004-2012	R
EN Fi	250	2010-2014	R
MX	250	2005-2014	R
MX Fi	250	2010-2014	R
SMM F	250	2010-2011	R
SMR	250	2005-2011	R
SMR F	250	2010-2011	R
EN	300	2005-2014	R
MX	300	2005-2014	R
SMR	300	2005-2011	R
EN F	450	2005-2014	R
MX F	450	2005-2014	R
SMR F	450	2010-2011	R
EN F	530	2005-2014	R
MX F	530	2005-2014	R
SMR F	530	2010-2011	R
SMX F	530	2005-2011	R
YAMAHA			
WR	125	2003-2007	R
YZ	125	2003-2015	R
WR	250	2003-2007	R
WR F	250	2003-2013	R
WR R	250	2008-2013	R
WR X	250	2008	R
YZ	250	2003-2014	R
YZ F	250	2003-2015	R
WR F	450	2003-2014	R
YZ F	450	2003-2015	R

891

CM46
- Sinterizzata off-road uso racing
- Offroad sintered pad racing use

CM44
- Sinterizzata off-road
- Offroad sintered pad

SM1
- Semimetallica polivalente
- Semi-metallic pad

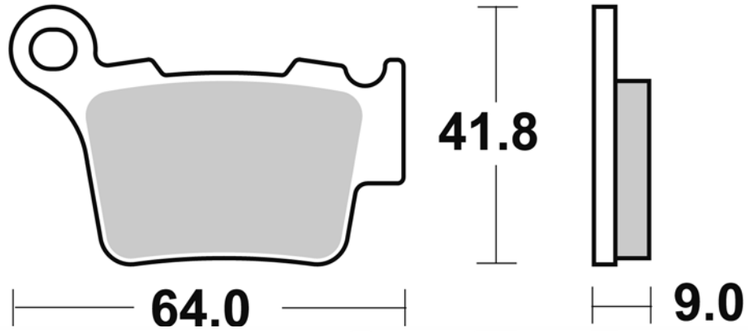

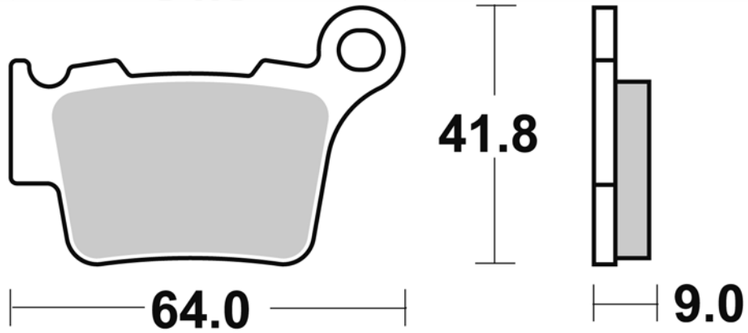

MODELLO MODEL	CC	ANNO YEAR	POSIZIONE POSITION
BMW			
G 450 X	450	2008-2011	R
HUSABERG			
TE	125	2012-2014	R
FE	250	2013-2014	R
TE	250	2011-2014	R
TE	300	2011-2014	R

MODELLO MODEL	CC	ANNO YEAR	POSIZIONE POSITION
FE	350	2013-2014	R
FE	390	2010-2012	R
FE	450	2009-2014	R
FX	450	2010	R
FE	510	2013-2014	R
FE	570	2010-2012	R
FS	570	2010	R

Le immagini hanno il solo scopo di presentare i prodotti.
The images used are aimed at presenting the products only.

FL > pastiglia anteriore sinistra / front left pad
FR > pastiglia anteriore destra / front right pad
R > pastiglia posteriore / rear pad

MODELLO MODEL	CC	ANNO YEAR	POSIZIONE POSITION
HUSQVARNA			
CR	125	2005-2006	**R**
CR	125	2007-2012	**R**
CR	125	2005-2012	**R**
TC	125	2014-2015	**R**
TE	125	2014	**R**
WR	125	2006-2012	**R**
FC	250	2014	**R**
FE	250	2014-2015	**R**
TC	250	2004-2014	**R**
TC	250	2004-2006	**R**
TC	250	2007-2014	**R**
TE	250	2004-2006	**R**
TE	250	2007-2014	**R**
TXC	250	2011	**R**
TE	300	2014-2015	**R**
TE	310	2009-2013	**R**
TXC	310	2011	**R**
FC	350	2014-2015	**R**
FE	350	2014	**R**
SMR	449	2011-2012	**R**
TC	449	2011-2013	**R**
TE	449	2011-2013	**R**
FC	450	2014-2015	**R**
FE	450	2014-2015	**R**
SMR - RR	450	2006-2008	**R**
TC	450	2002-2010	**R**
TE	450	2006-2010	**R**
TXC	450	2011-2012	**R**
TXC	480	2013	**R**
FE	510	2014	**R**
TC	510	2007-2009	**R**
TE	510	2002-2006	**R**
TE	510	2007-2010	**R**
TXC	510	2009-2010	**R**
SMR	511	2011-2012	**R**
TE	511	2011-2013	**R**
TE	511	2011-2012	**R**
TE	511	2012	**R**
TXC	511	2011-2013	**R**
KTM			
EXC	125	2004-2015	**R**
EXC	125	2004-2014	**R**
EXC SIX DAYS	125	2009-2015	**R**
SX	125	2004-2015	**R**
SXS	125	2004-2010	**R**
SX	144	2007-2010	**R**
SX	150	2008-2015	**R**
EXC	200	2003-2015	**R**
EXC	200	2003-2014	**R**
SX	200	2003-2009	**R**
XC W	200	2006-2009	**R**
EXC	250	2004-2014	**R**
EXC E	250	2015	**R**
EXC F	250	2004-2015	**R**
EXC F SIX DAYS	250	2009-2015	**R**
EXC G	250	2004-2009	**R**
EXC SIX DAYS	250	2009-2015	**R**
SX	250	2003-2015	**R**
SX F	250	2003-2015	**R**

MODELLO MODEL	CC	ANNO YEAR	POSIZIONE POSITION
SXS	250	2003-2010	**R**
SXS F	250	2006-2009	**R**
XC F	250	2007-2012	**R**
XC W	250	2006-2012	**R**
EXC	300	2004-2014	**R**
EXC E	300	2015	**R**
EXC SIX DAYS	300	2009-2015	**R**
MXC	300	2004-2005	**R**
XC	300	2006-2012	**R**
XC W	300	2006-2012	**R**
EXC F	350	2010-2015	**R**
EXC F SIX DAYS	350	2011-2015	**R**
SX F	350	2011-2015	**R**
EXC	400	2004-2011	**R**
EXC G	400	2004-2006	**R**
XC W	400	2007-2009	**R**
EXC	450	2004-2015	**R**
EXC R	450	2008-2009	**R**
EXC SIX DAYS	450	2009-2015	**R**
MXC	450	2004-2006	**R**
SMR	450	2004-2014	**R**
SX F	450	2003-2015	**R**
SXS	450	2003-2010	**R**
SXS F	450	2003-2010	**R**
XC	450	2007-2009	**R**
XC F	450	2007-2009	**R**
XC G	450	2006	**R**
XC W	450	2007-2008	**R**
XC W	450	2007	**R**
XC W	450	2008-2009	**R**
XC W	450	2009	**R**
XC W	450	2007-2009	**R**
EXC	500	2011-2015	**R**
EXC SIX DAYS	500	2011-2015	**R**
SX F	505	2007-2009	**R**
XC F	505	2007-2009	**R**
EXC	525	2004-2008	**R**
MXC	525	2004-2005	**R**
SMR	525	2004-2005	**R**
SX	525	2004-2006	**R**
XC	525	2006-2008	**R**
XC G	525	2006-2008	**R**
XC W	525	2006-2008	**R**
EXC	530	2010-2011	**R**
EXC R	530	2008-2009	**R**
EXC SIX DAYS	530	2009	**R**
SXS	540	2003-2006	**R**
SMR	560	2006-2008	**R**
SUPERMOTO PRESTIGE	690	2007-2008	**R**
SUPERMOTO R	690	2008	**R**
SHERCO			
SE i	250	2013-2014	**R**
SEF	250	2013-2014	**R**
SEF-R	250	2013-2014	**R**
SE-R	250	2013-2014	**R**
SE i	300	2013-2014	**R**
SEF	300	2013-2014	**R**
SEF-R	300	2013-2014	**R**
SE-R	300	2013-2014	**R**
TM			
MX	125	2012-2014	**R**

892

CM55
- Sinterizzata stradale ant. uso sportivo
- Front sintered pad

SM1
- Semimetallica polivalente
- Semi-metallic pad

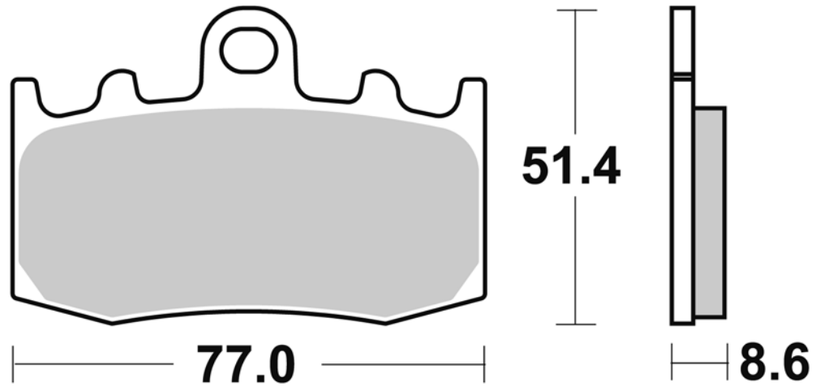

MODELLO MODEL	CC	ANNO YEAR	POSIZIONE POSITION
BMW			
R 850 RT Integral ABS	850	2001-2004	**FL/FR**
R 1100 S	1100	2001-2006	**FL/FR**
R 1100 S BOXER CUP REPLIKA	1100	2003-2006	**FL/FR**
R 1150 GS (Brembo caliper)	1150	2002-2004	**FL/FR**
R 1150 GS ADVENTURE	1150	2002-2005	**FL/FR**
R 1150 RT	1150	2001-2005	**FL/FR**
R 1150 RT ABS	1150	2001-2005	**FL/FR**
HP2 Megamoto	1200	2007-2010	**FL/FR**
K 1200 GT ABS	1200	2002-2007	**FL/FR**

MODELLO MODEL	CC	ANNO YEAR	POSIZIONE POSITION
K 1200 R	1200	2004-2008	**FL/FR**
K 1200 RS	1200	2001-2006	**FL/FR**
K 1200 S / ABS	1200	2004-2007	**FL/FR**
R 1200 GS	1200	2004-2012	**FL/FR**
R 1200 GS - ABS	1200	2004-2012	**FL/FR**
R 1200 GS ADVENTURE	1200	2006-2013	**FL/FR**
R 1200 RT	1200	2005-2013	**FL/FR**
R 1200 ST	1200	2005-2008	**FL/FR**
K 1300 GT	1300	2009-2010	**FL/FR**
K 1300 S	1300	2009-2014	**FL/FR**

893

CM66
- Semimetallica uso racing
- Semi-metallic pad racing use only

CM55
- Sinterizzata stradale ant. uso sportivo
- Front sintered pad

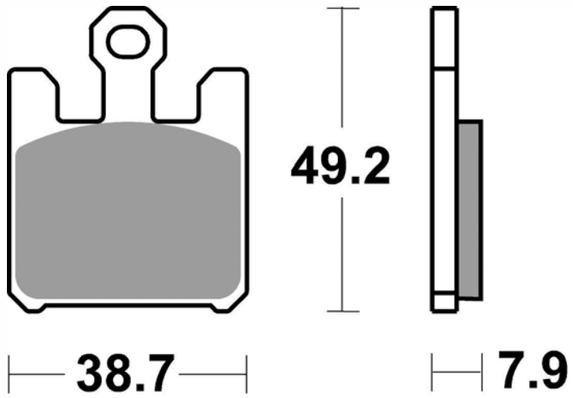

MODELLO MODEL	CC	ANNO YEAR	POSIZIONE POSITION
KAWASAKI			
ZX6RR NINJA	600	2003-2006	**FL/FR**
ZX6R NINJA	636	2003-2006	**FL/FR**
ZX-10R	1000	2004-2007	**FL/FR**
ZX12R NINJA	1200	2004-2006	**FL/FR**
VN MEAN STREAK	1600	2006-2007	**FL/FR**

MODELLO MODEL	CC	ANNO YEAR	POSIZIONE POSITION
SUZUKI			
GSX R	1000	2003	**FL/FR**
BOULEVARD	1600	2005-2006	**FL/FR**
M INTRUDER	1600	2005-2006	**FL/FR**

Le immagini hanno il solo scopo di presentare i prodotti.
The images used are aimed at presenting the products only.

FL > pastiglia anteriore sinistra / front left pad
FR > pastiglia anteriore destra / front right pad
R > pastiglia posteriore / rear pad

894

CM44
- Sinterizzata off-road
- Offroad sintered pad

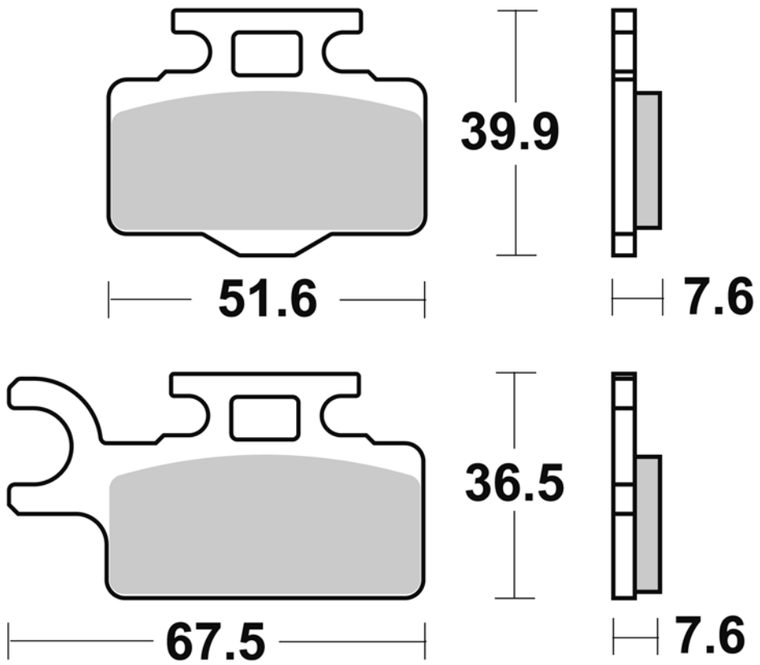

MODELLO MODEL	CC	ANNO YEAR	POSIZIONE POSITION
KAWASAKI			
KX	65	2000-2015	**FL**

MODELLO MODEL	CC	ANNO YEAR	POSIZIONE POSITION
SUZUKI			
RM	65	2003-2005	**FL**

895

CM55
- Sinterizzata stradale ant. uso sportivo
- Front sintered pad

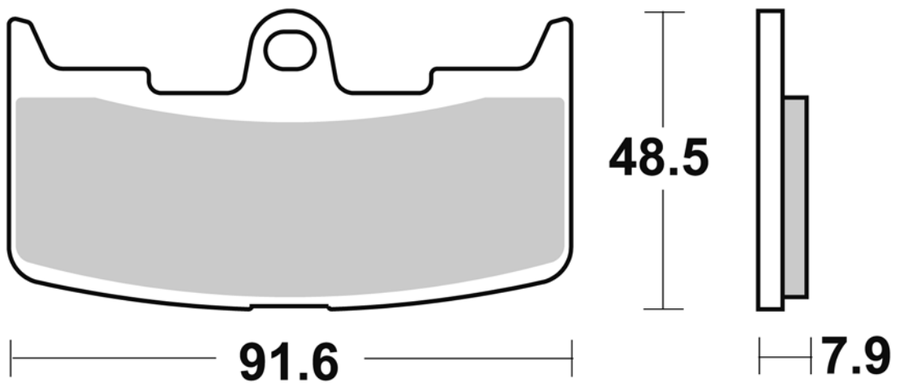

MODELLO MODEL	CC	ANNO YEAR	POSIZIONE POSITION
BUELL			
XB9R FIREBOLT	984	2002-2006	**FR**
XB9S LIGHTNING	984	2002-2006	**FR**
XB9SX CityX	984	2005-2009	**FR**

MODELLO MODEL	CC	ANNO YEAR	POSIZIONE POSITION
XB12R FIREBOLT	1200	2004-2009	**FR**
XB12S LIGHTNING	1200	2003-2008	**FR**
XB12SS LIGHTNING LONG	1200	2005-2006	**FR**
XB12X ULYSSES	1200	2005-2007	**FR**

896

P30
- Sinterizzata scooter
- Scooter sintered pad

SM1
- Semimetallica polivalente
- Semi-metallic pad

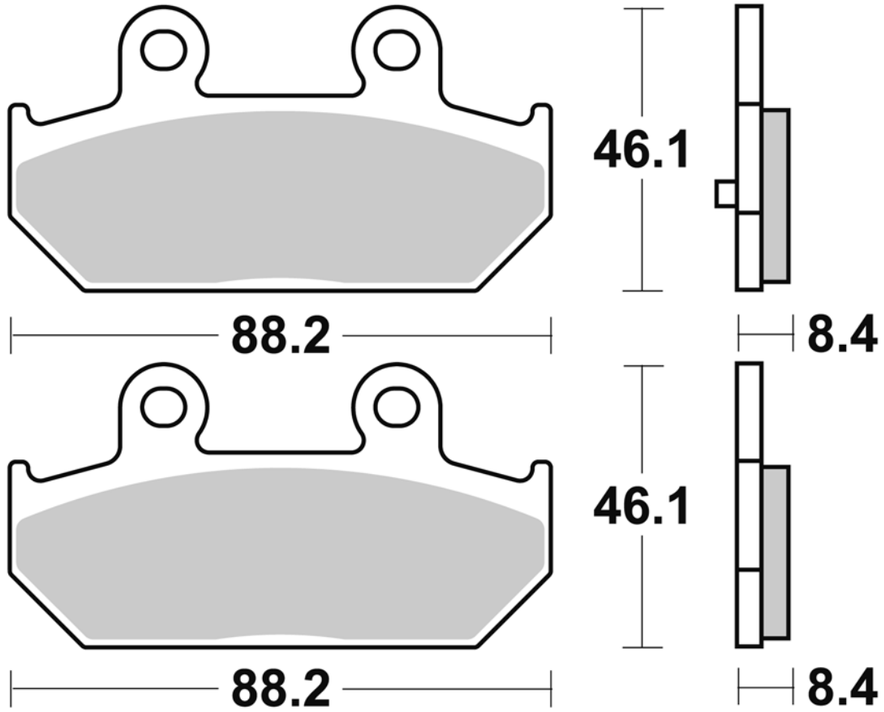

MODELLO MODEL	CC	ANNO YEAR	POSIZIONE POSITION
SUZUKI			
BURGMAN ABS	400	2011	**R**
BURGMAN twin disk	400	2006-2011	**R**
BURGMAN (4 fori / holes)	650	2002-2005	**R**

MODELLO MODEL	CC	ANNO YEAR	POSIZIONE POSITION
BURGMAN (5 fori / holes)	650	2004-2012	**R**
BURGMAN ABS	650	2004-2014	**R**
BURGMAN ABS EXECUTIVE	650	2013-2014	**R**

897

CM44
- Sinterizzata off-road
- Offroad sintered pad

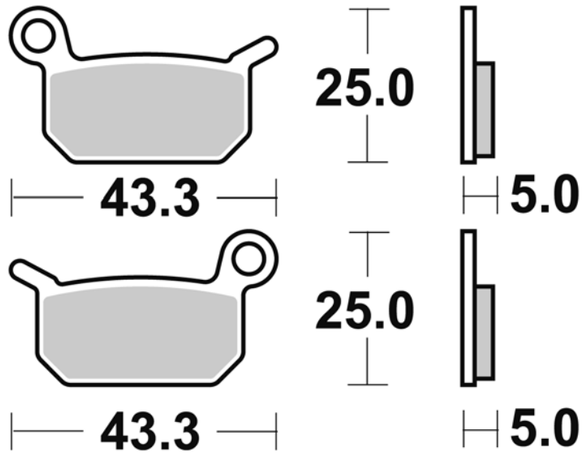

MODELLO MODEL	CC	ANNO YEAR	POSIZIONE POSITION
KTM			
LC	50	2002-2005	**FL**
SX	50	2004-2014	**FL**
SX	50	2004-2014	**R**

MODELLO MODEL	CC	ANNO YEAR	POSIZIONE POSITION
SX JUNIOR	50	2006-2007	**FL**
SX SENIOR ADVENTURE (Rear Drum Model)	50	2002-2007	**FL**
SX	65	2004-2008	**R**

Le immagini hanno il solo scopo di presentare i prodotti.
The images used are aimed at presenting the products only.

FL > pastiglia anteriore sinistra / front left pad
FR > pastiglia anteriore destra / front right pad
R > pastiglia posteriore / rear pad

898

P1R
- Sinterizzata racing
- Sintered pad racing use only

CM66
- Semimetallica uso racing
- Semi-metallic pad racing use only

CM55
- Sinterizzata stradale ant. uso sportivo
- Front sintered pad

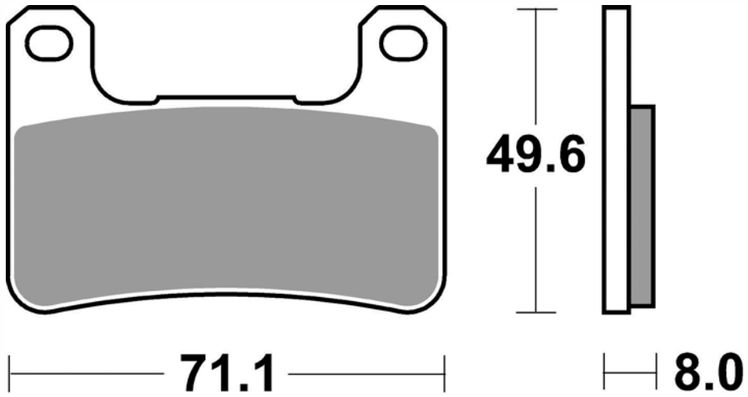

MODELLO MODEL	CC	ANNO YEAR	POSIZIONE POSITION
KAWASAKI			
Z 1000	1000	2010-2014	**FL/FR**
Z 1000 - ABS	1000	2010-2014	**FL/FR**
Z 1000 SX	1000	2011-2013	**FL/FR**
Z 1000 SX ABS	1000	2011-2014	**FL/FR**
ZX-10R	1000	2008-2015	**FL/FR**
ZX-10R ABS	1000	2011-2015	**FL/FR**

MODELLO MODEL	CC	ANNO YEAR	POSIZIONE POSITION
SUZUKI			
GSX R	600	2004-2010	**FL/FR**
GSX R	750	2004-2010	**FL/FR**
GSX R	1000	2004-2011	**FL/FR**
GSX R HAYABUSA	1300	2008-2009	**FL**
GSX R HAYABUSA	1300	2010-2012	**FL/FR**
VZR INTRUDER M	1800	2006-2012	**FL/FR**

899

CM66
- Semimetallica uso racing
- Semi-metallic pad racing use only

CM55
- Sinterizzata stradale ant. uso sportivo
- Front sintered pad

P1R
- Sinterizzata racing
- Sintered pad racing use only

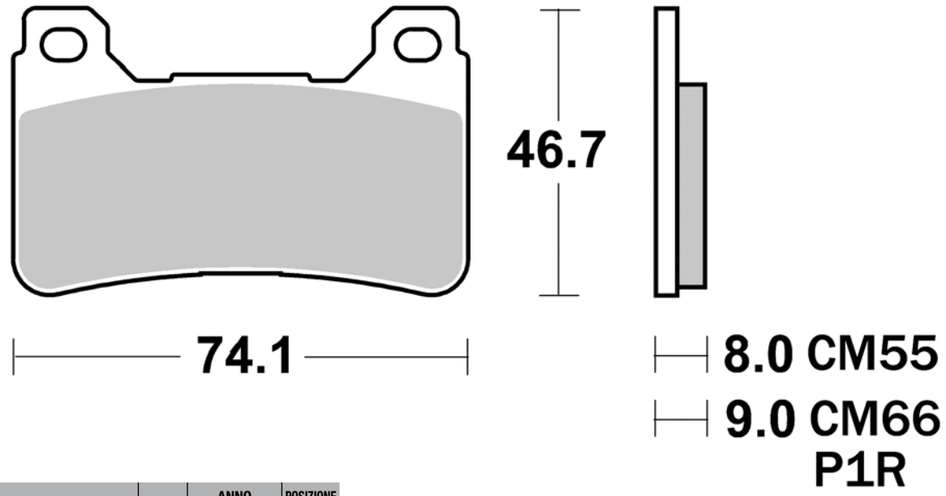

MODELLO MODEL	CC	ANNO YEAR	POSIZIONE POSITION
HONDA			
CBR RR	600	2005-2014	**FL/FR**
CBR RR - ABS	600	2009-2014	**FL/FR**
VFR F	800	2014	**FL/FR**
CB 1000 R	1000	2008-2013	**FL/FR**
CBR RR	1000	2004-2014	**FL/FR**
CBR RR - ABS	1000	2009-2014	**FL/FR**

900

CM77
- Sinterizzata anteriore Harley Davidson
- Front cruiser sintered pad

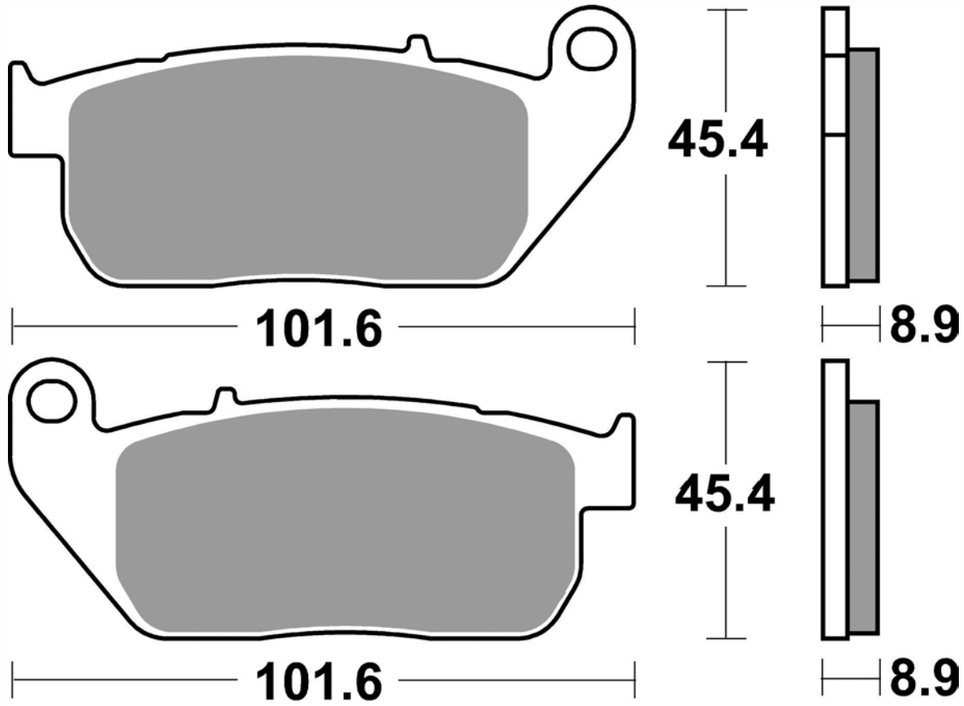

MODELLO MODEL	CC	ANNO YEAR	POSIZIONE POSITION
HARLEY D.			
XL 883 L SPORTSTER LOW	883	2007-2013	**FL**
XL 883 N IRON	883	2009-2013	**FL**
XL 883 R ROADSTER	883	2010-2011	**FL/FR**
XL 883 R SPORTSTER R	883	2005-2013	**FL/FR**
XL 883 SPORTSTER CUSTOM	883	2004-2010	**FL**
XLH 883 SPORTSTER	883	2004-2006	**FL**

MODELLO MODEL	CC	ANNO YEAR	POSIZIONE POSITION
XL 1200 C SPORTSTER CUSTOM	1200	2004-2013	**FL**
XL 1200 L SPORTSTER LOW	1200	2007-2013	**FL**
XL 1200 R SPORTSTER ROADSTER	1200	2004-2008	**FL/FR**
XL 1200 SPORTSTER - FORTY EIGHT	1200	2010-2011	**FL**
XL 1200 SPORTSTER N NIGHTSTER	1200	2007-2013	**FL**
XL 1200 V - SEVENTY TWO	1200	2012-2013	**FL**
XL 1200 X - FORTY EIGHT	1200	2010-2013	**FL**

Le immagini hanno il solo scopo di presentare i prodotti.
The images used are aimed at presenting the products only.

FL > pastiglia anteriore sinistra / front left pad
FR > pastiglia anteriore destra / front right pad
R > pastiglia posteriore / rear pad

901

CM88
- Sinterizzata posteriore Harley Davidson
- Rear cruiser sintered pad

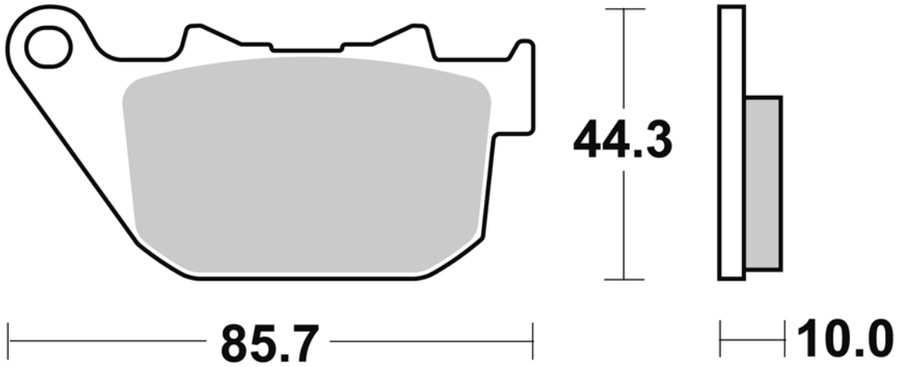

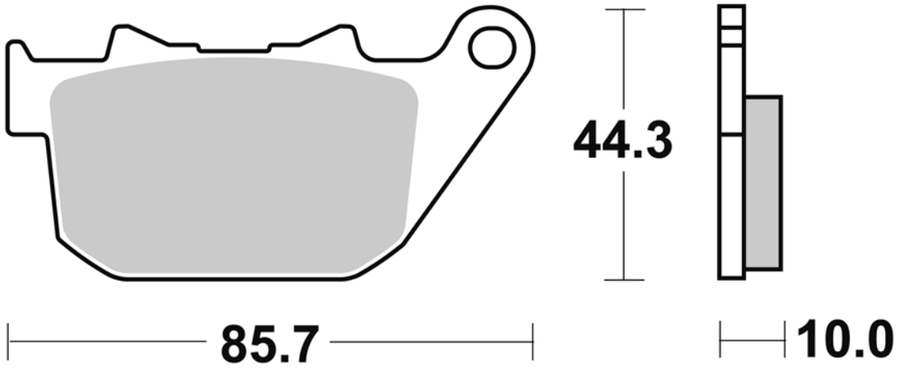

MODELLO MODEL	CC	ANNO YEAR	POSIZIONE POSITION
HARLEY D.			
XL 883 L SPORTSTER LOW	883	2007-2013	R
XL 883 N IRON	883	2009-2013	R
XL 883 R ROADSTER	883	2010-2011	R
XL 883 R SPORTSTER R	883	2005-2013	R
XL 883 SPORTSTER CUSTOM	883	2004-2010	R
XLH 883 SPORTSTER	883	2004-2006	R
XL 1200 C SPORTSTER CUSTOM	1200	2004-2012	R
XL 1200 C SPORTSTER CUSTOM	1200	2012-2013	R

MODELLO MODEL	CC	ANNO YEAR	POSIZIONE POSITION
XL 1200 C SPORTSTER CUSTOM	1200	2013	R
XL 1200 L SPORTSTER LOW	1200	2007-2011	R
XL 1200 R SPORTSTER ROADSTER	1200	2004-2008	R
XL 1200 SPORTSTER - FORTY EIGHT	1200	2010-2011	R
XL 1200 SPORTSTER N NIGHTSTER	1200	2007-2013	R
XL 1200 V - SEVENTY TWO	1200	2012-2013	R
XL 1200 X - FORTY EIGHT	1200	2010-2013	R
XR	1200	2008-2010	R
XR 1200 X	1200	2010-2012	R

902

SM1
- Semimetallica polivalente
- Semi-metallic pad

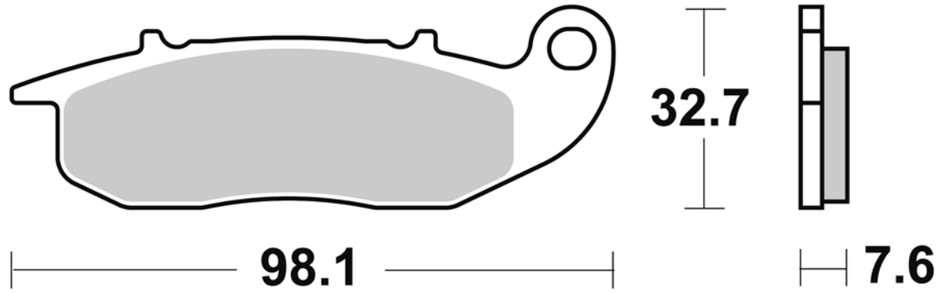

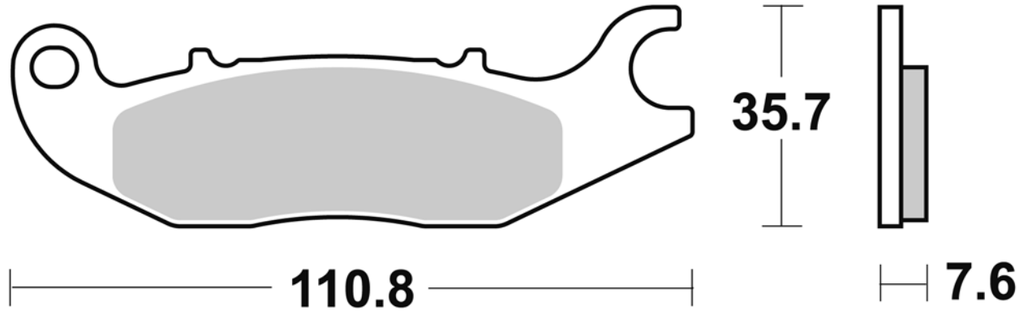

MODELLO MODEL	CC	ANNO YEAR	POSIZIONE POSITION
HONDA			
CBF (Rear Drum Model)	125	2009-2012	FR
CBR R	125	2003-2014	FR
INNOVA ANF	125	2003-2010	FR
MSX (GROM)	125	2013-2014	FR

MODELLO MODEL	CC	ANNO YEAR	POSIZIONE POSITION
RIEJU			
NKD	50	2008-2010	FL

903

SM1
- Semimetallica polivalente
- Semi-metallic pad

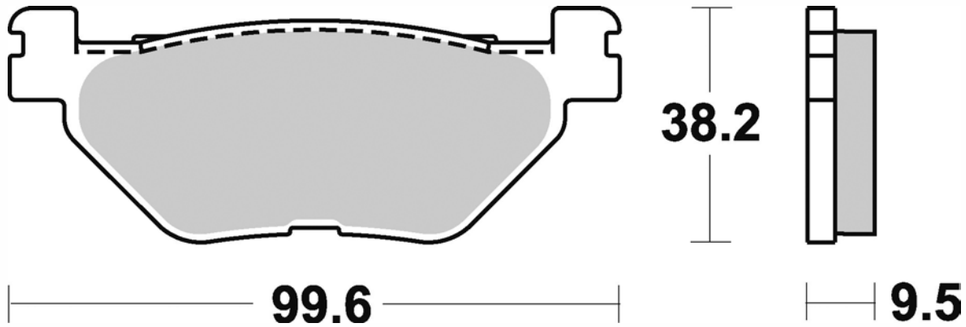

MODELLO MODEL	CC	ANNO YEAR	POSIZIONE POSITION
YAMAHA			
TDM	900	2002-2014	R
XVS	950	2014	R
XVS ABS	950	2014	R
XVS R ABS	950	2014	R
FJR	1300	2001-2004	R

MODELLO MODEL	CC	ANNO YEAR	POSIZIONE POSITION
FJR ABS	1300	2003-2013	R
XVS MIDNIGHT STAR	1300	2007-2011	R
V MAX	1700	2009-2012	R
XV PC ROAD STAR WARRIOR	1700	2002-2007	R
XV A MIDNIGHT STAR	1900	2006-2012	R

Le immagini hanno il solo scopo di presentare i prodotti.
The images used are aimed at presenting the products only.

FL > pastiglia anteriore sinistra / front left pad
FR > pastiglia anteriore destra / front right pad
R > pastiglia posteriore / rear pad

904

P30
- Sinterizzata scooter
- Scooter sintered pad

SM1
- Semimetallica polivalente
- Semi-metallic pad

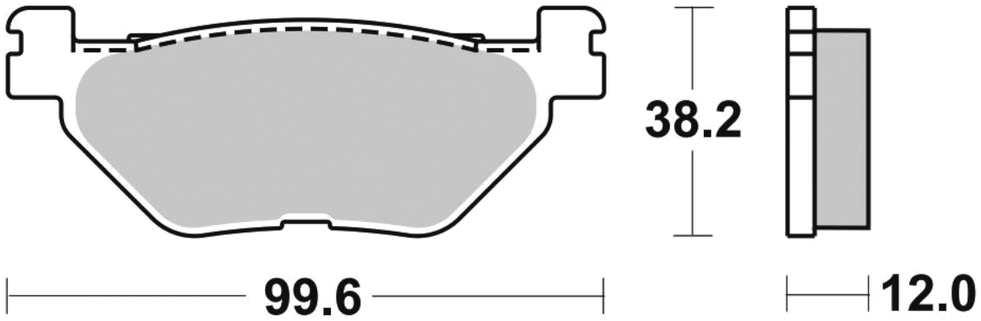

MODELLO MODEL	CC	ANNO YEAR	POSIZIONE POSITION
MBK			
SKYLINER	400	2004	**R**
YAMAHA			
YP G GRAND MAJESTY [japan]	250	2004-2005	**R**
YP MAJESTY	400	2004-2013	**R**

MODELLO MODEL	CC	ANNO YEAR	POSIZIONE POSITION
YP MAJESTY ABS	400	2007-2013	**R**
XP T-MAX	500	2004-2011	**R**
XP T-MAX ABS	500	2008-2011	**R**
XP T-MAX	530	2012-2014	**R**
XP T-MAX ABS	530	2012-2014	**R**

905

CM44
- Sinterizzata off-road
- Offroad sintered pad

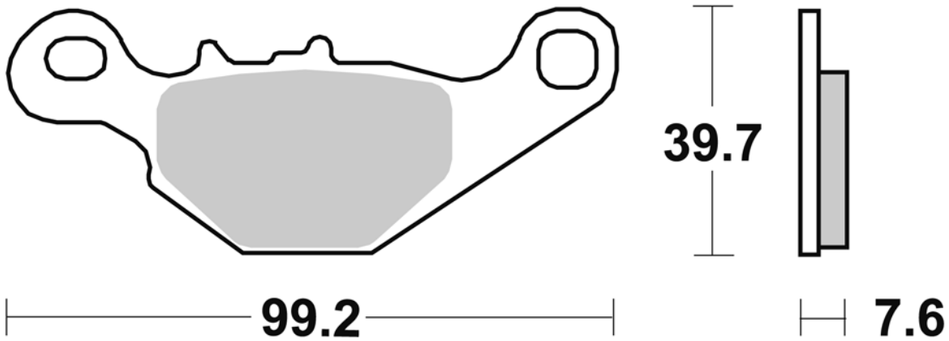

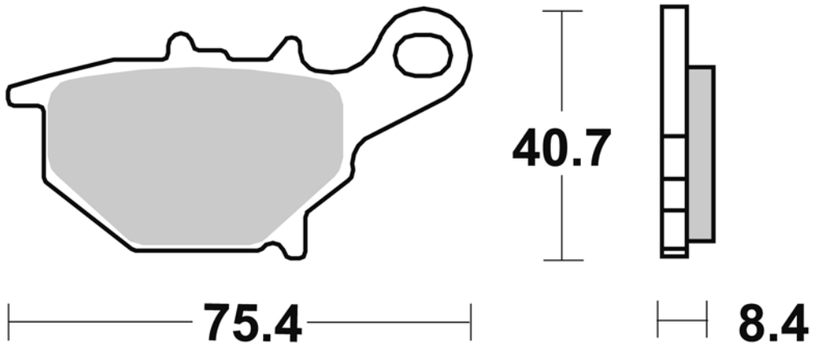

MODELLO MODEL	CC	ANNO YEAR	POSIZIONE POSITION
SUZUKI			
RM	85	2005-2011	**R**

MODELLO MODEL	CC	ANNO YEAR	POSIZIONE POSITION

906

CM55
- Sinterizzata stradale ant. uso sportivo
- Front sintered pad

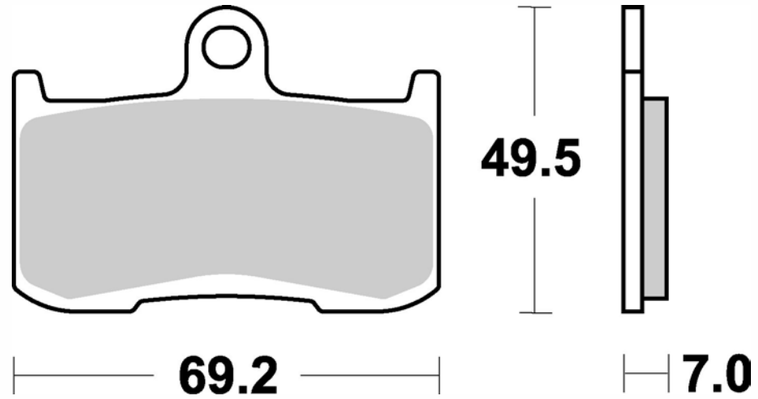

MODELLO MODEL	CC	ANNO YEAR	POSIZIONE POSITION
KAWASAKI			
Z 800	800	2013	**FL/FR**
Z 800 ABS	800	2013	**FL/FR**
ZX9R NINJA	900	2002-2003	**FL/FR**
Z 1000	1000	2003-2006	**FL/FR**
SUZUKI			
B-KING	1300	2008-2010	**FL/FR**

MODELLO MODEL	CC	ANNO YEAR	POSIZIONE POSITION
TRIUMPH			
DAYTONA	675	2006-2008	**FL/FR**
STREET TRIPLE R	675	2009-2014	**FL/FR**
SPEED TRIPLE	1050	2005-2007	**FL/FR**
TIGER	1050	2007-2011	**FL/FR**
TIGER ABS	1050	2007-2013	**FL/FR**

907

CM56
- Sinterizzata stradale post. uso sportivo
- Rear sintered pad

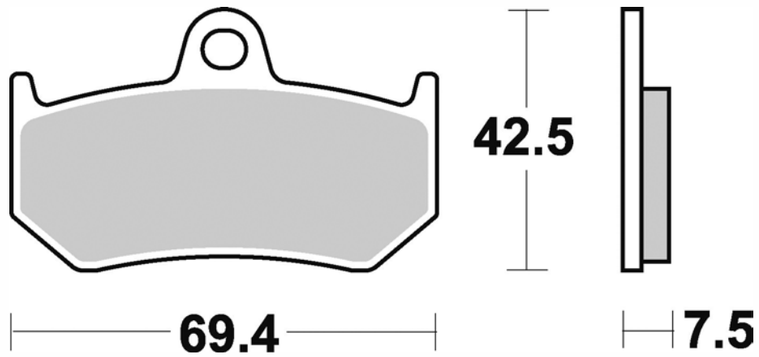

MODELLO MODEL	CC	ANNO YEAR	POSIZIONE POSITION
MV AGUSTA			
BRUTALE	750	2001-2006	**R**
BRUTALE S	750	2001-2006	**R**
BRUTALE SERIE ORO	750	2002-2006	**R**
F4	750	2000-2006	**R**
F4 S	750	2000-2006	**R**
F4 SENNA	750	2000-2006	**R**
F4 SERIE ORO	750	1998-1999	**R**
BRUTALE R	910	2006-2008	**R**
BRUTALE S	910	2006-2008	**R**
BRUTALE	920	2010-2012	**R**
BRUTALE	989	2008-2009	**R**
BRUTALE R	990	2010-2011	**R**
F4 312 R	1000	2007-2009	**R**

MODELLO MODEL	CC	ANNO YEAR	POSIZIONE POSITION
F4 312 RR	1000	2007-2008	**R**
F4 AGO	1000	2005	**R**
F4 FRECCE TRICOLORI	1000	2010-2012	**R**
F4 MAMBA	1000	2004-2007	**R**
F4 R	1000	2006-2007	**R**
F4 R	1000	2010-2013	**R**
F4 RR	1000	2010-2013	**R**
F4 S	1000	2004-2007	**R**
F4 SENNA	1000	2006	**R**
F4 TAMBURINI	1000	2006-2008	**R**
BRUTALE RR	1078	2008-2009	**R**
BRUTALE	1090	2013	**R**
BRUTALE R	1090	2012-2013	**R**
BRUTALE RR	1090	2010-2013	**R**

Le immagini hanno il solo scopo di presentare i prodotti.
The images used are aimed at presenting the products only.

FL > pastiglia anteriore sinistra / front left pad
FR > pastiglia anteriore destra / front right pad
R > pastiglia posteriore / rear pad

908

P30
- Sinterizzata scooter
- Scooter sintered pad

SM1
- Semimetallica polivalente
- Semi-metallic pad

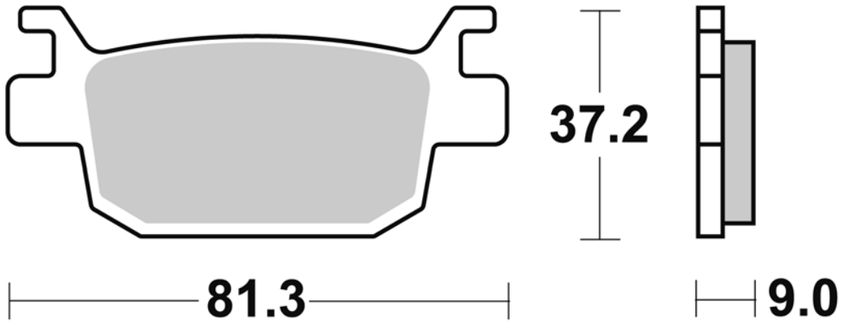

MODELLO MODEL	CC	ANNO YEAR	POSIZIONE POSITION
HONDA			
SH i	125	2009-2014	R
SH SPORTY	125	2011	R
SILVER WING	125	2007-2011	R
SILVER WING ABS	125	2007-2011	R
SH i	150	2009-2014	R
SH SPORTY	150	2011	R

MODELLO MODEL	CC	ANNO YEAR	POSIZIONE POSITION
SILVER WING	150	2007-2009	R
SILVER WING ABS	150	2007-2009	R
FORZA	250	2005-2009	R
SH i	300	2006-2014	R
SH i ABS	300	2006-2014	R
SH i BLAUER HT Limited Edition	300	2014	R

909

SM1
- Semimetallica polivalente
- Semi-metallic pad

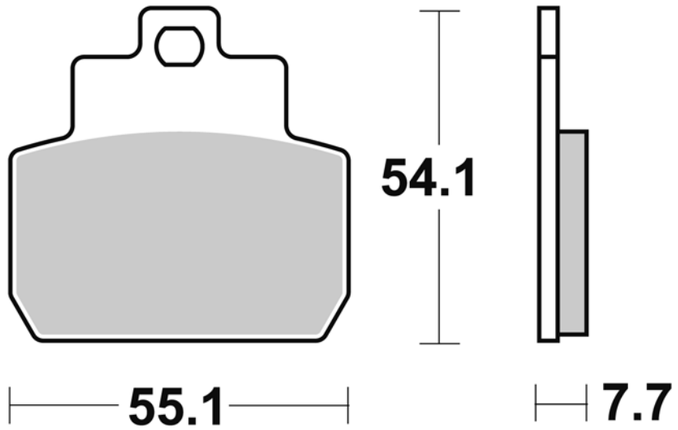

MODELLO MODEL	CC	ANNO YEAR	POSIZIONE POSITION
GILERA			
FUOCO	500	2007-2011	R
FUOCO	500	2012-2014	R
PIAGGIO			
MP3	125	2008	R
X8	125	2005-2006	R
MP3	250	2006-2008	R
X8	250	2005-2008	R

MODELLO MODEL	CC	ANNO YEAR	POSIZIONE POSITION
X9	250	2005-2006	R
X9 EVOLUTION	250	2005-2006	R
MP3	400	2007-2009	R
MP3 IE LT	400	2008-2010	R
MP3 IE LT SPORT	400	2008-2010	R
MP3 LT	400	2008-2010	R
MP3 LT SPORT	400	2008-2010	R
BEVERLY	500	2006	R

910

CM55
- Sinterizzata stradale ant. uso sportivo
- Front sintered pad

P30
- Sinterizzata scooter
- Scooter sintered pad

SM1
- Semimetallica polivalente
- Semi-metallic pad

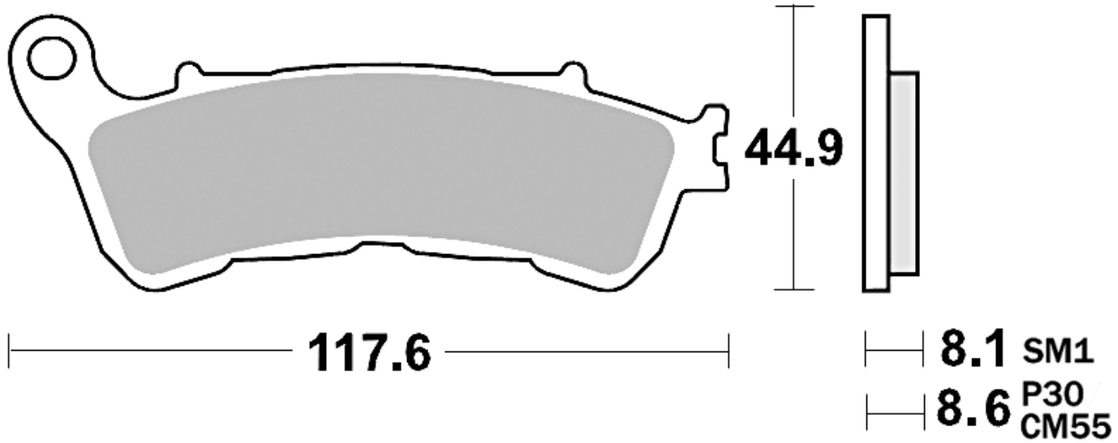

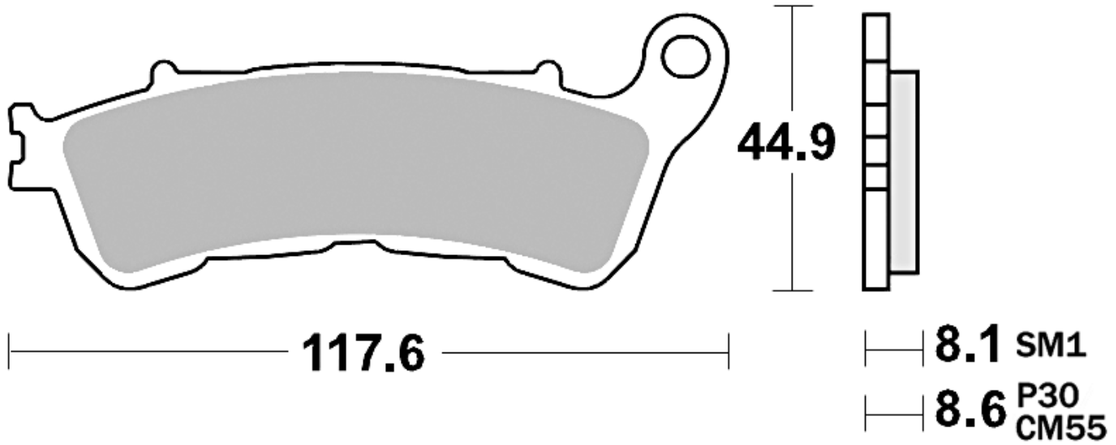

MODELLO MODEL	CC	ANNO YEAR	POSIZIONE POSITION
HONDA			
SH i	125	2009-2012	FL
SH SPORTY	125	2011	FR
SILVER WING	125	2007-2011	FL
SILVER WING ABS	125	2007-2011	FL
SH i	150	2009-2012	FL
SH SPORTY	150	2011	FR
SILVER WING	150	2007-2009	FL
SILVER WING ABS	150	2007-2009	FL
CBR R ABS	250	2011-2013	FR
FORZA	250	2005-2009	FL
SH i	300	2006-2014	FL
SH i ABS	300	2006-2014	FL
SH i BLAUER HT Limited Edition	300	2014	FL
SW-T	400	2009-2014	FL
SW-T ABS	400	2009-2014	FL
CBF ABS	500	2004-2007	FL/FR
CB F HORNET ABS	600	2007-2013	FL/FR
CBF S ABS	600	2008-2011	FL/FR
CBR F ABS	600	2011-2013	FL/FR
SW-T ABS	600	2011-2014	FL
DN-01	680	2008-2012	FL/FR
NTV DEAUVILLE	680	2006-2012	FL/FR
INTEGRA	700	2012-2013	FR

MODELLO MODEL	CC	ANNO YEAR	POSIZIONE POSITION
NC S ABS	700	2012-2013	FR
NC X ABS	700	2012-2013	FR
XL V TRANSALP ABS	700	2008-2011	FL/FR
CROSSRUNNER	800	2011-2014	FL/FR
VFR V-TEC	800	2006-2010	FL/FR
CB 1000 R - ABS	1000	2009-2014	FL/FR
CBF ABS	1000	2006-2012	FL/FR
CBF ABS	1000	2006-2012	R
CBF ST ABS	1000	2006-2012	FL/FR
CBF ST ABS	1000	2006-2012	R
XLV VARADERO	1000	2008-2011	FL/FR
XLV VARADERO ABS	1000	2004-2011	FL/FR
CB	1100	2013	FL/FR
CROSSTOURER	1200	2012-2013	FL/FR
CTX ABS	1300	2014	FL/FR
ST PAN EUROPEAN	1300	2008-2009	FL/FR
ST PAN EUROPEAN ABS	1300	2008-2009	FL/FR
VT CX ABS	1300	2010-2011	FL
SUZUKI			
BURGMAN	125	2007-2013	FR
SIXTEEN	125	2008-2011	FR
SIXTEEN	150	2008-2011	FR
BURGMAN	200	2007-2013	FL
VLR INTRUDER C	1800	2008-2011	FL/FR

Le immagini hanno il solo scopo di presentare i prodotti.
The images used are aimed at presenting the products only.

FL > pastiglia anteriore sinistra / front left pad
FR > pastiglia anteriore destra / front right pad
R > pastiglia posteriore / rear pad

911

CM44
- Sinterizzata off-road
- Offroad sintered pad

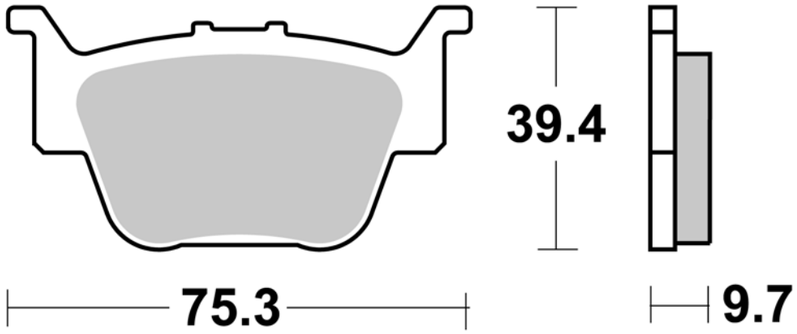

MODELLO MODEL	CC	ANNO YEAR	POSIZIONE POSITION
HONDA			
TRX R	450	2004-2009	**R**
TRX	650	2003-2005	**R**
TRX	680	2006-2014	**R**

923

SM1
- Semimetallica polivalente
- Semi-metallic pad

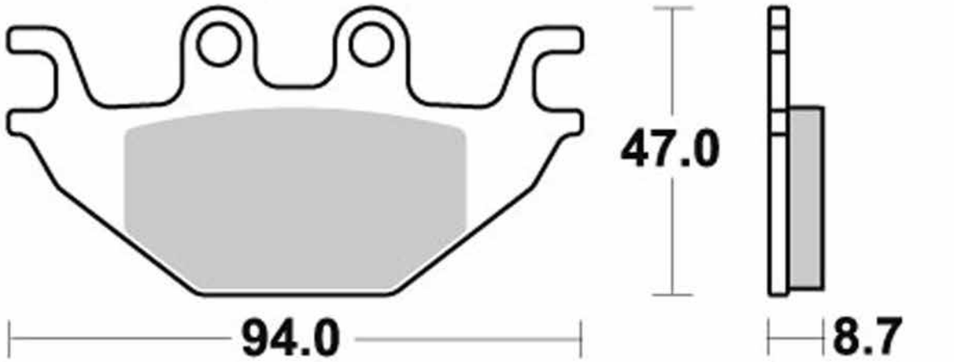

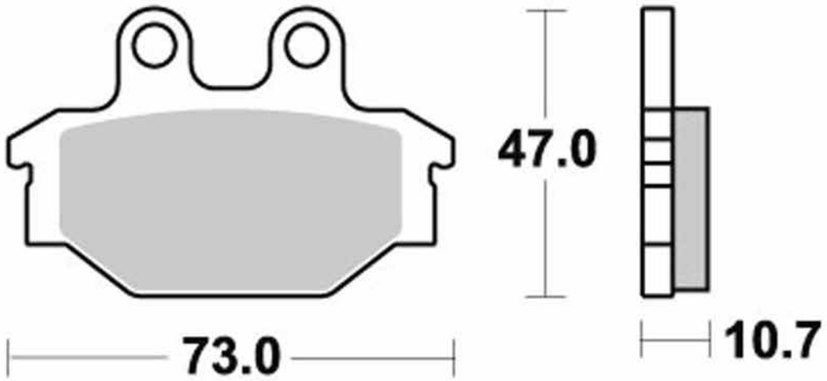

MODELLO MODEL	CC	ANNO YEAR	POSIZIONE POSITION
ADLY			
ATV Sport	300	2007	**FL/FR**
CROSS X OVER	300	2007	**FL/FR**

MODELLO MODEL	CC	ANNO YEAR	POSIZIONE POSITION
CROSS X ROAD	300	2007	**FL/FR**
S	320	2007	**FL/FR**
U	320	2007	**FL/FR**

MODELLO MODEL	CC	ANNO YEAR	POSIZIONE POSITION
CAN-AM			
DS	250	2008	**FL/FR**
DS	250	2008	**R**
CPI			
XS ATV	250	2007	**FL/FR**
HERCULES			
ATV	280	2007	**FL/FR**
ATV Sport	300	2007	**FL/FR**
KYMCO			
KXR	250	2004-2007	**FL/FR**
URBAN QUAD	250	2006	**FL/FR**
MAXXER	300	2006-2011	**FL/FR**
MXU	300	2006-2011	**FL/FR**
MXU	300	2006-2011	**R**
MXU R	300	2010-2011	**FL/FR**
MXU R	300	2010-2011	**R**
MXU	500	2006	**FL/FR**
MXU	500	2006	**R**
UXV 4x4	500	2008-2011	**FL/FR**

MODELLO MODEL	CC	ANNO YEAR	POSIZIONE POSITION
UXV 4x4	500	2008-2011	**R**
SYM			
SB NI	125	2011	**R**
WOLF	125	2011	**R**
TRACKRUNNER	200	2006-2009	**FL/FR**
QUADLANDER	250	2005-2009	**FL/FR**
CITY MAX	300	2006	**FL/FR**
OUTLANDER	300	2008-2010	**FL/FR**
OUTLANDER	300	2008-2010	**R**
OUTLANDER S	300	2007-2008	**FL/FR**
OUTLANDER S	300	2007-2008	**R**
QUADLANDER	300	2006	**FL/FR**
QUADLANDER	300	2006	**R**
QUAD RAIDER	600	2008-2009	**FL/FR**
QUAD RAIDER	600	2008-2009	**R**
QUAD RAIDER LE	600	2010	**FL/FR**
QUAD RAIDER LE	600	2010	**R**
YAMAHA			
YZF R	125	2008-2013	**R**

924

CM56
- Sinterizzata stradale post. uso sportivo
- Rear sintered pad

SM1
- Semimetallica polivalente
- Semi-metallic pad

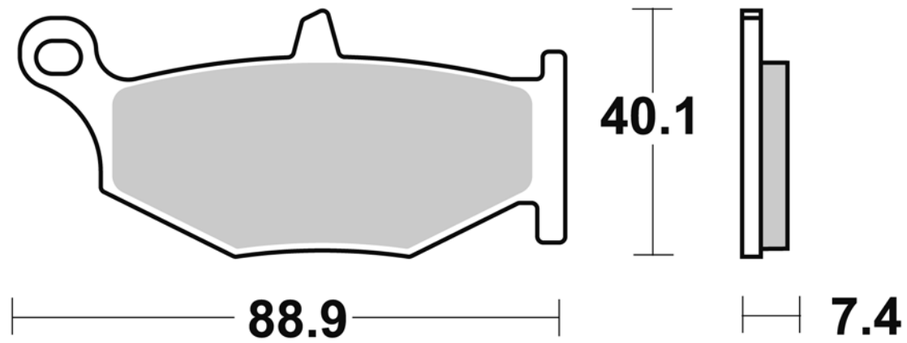

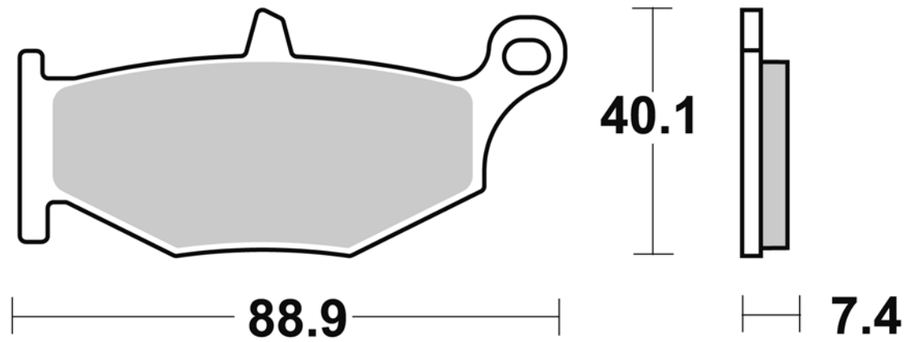

MODELLO MODEL	CC	ANNO YEAR	POSIZIONE POSITION
SUZUKI			
GSR	400	2006-2008	**R**
GSR	600	2006-2010	**R**
GSX R	600	2006-2010	**R**
GSX R	750	2006-2010	**R**
GSX R	1000	2007-2008	**R**
B-KING	1300	2008-2010	**R**
GSX R HAYABUSA	1300	2008-2012	**R**

Le immagini hanno il solo scopo di presentare i prodotti.
The images used are aimed at presenting the products only.

FL > pastiglia anteriore sinistra / front left pad
FR > pastiglia anteriore destra / front right pad
R > pastiglia posteriore / rear pad

925

CM56
- Sinterizzata stradale post. uso sportivo
- Rear sintered pad

SM1
- Semimetallica polivalente
- Semi-metallic pad

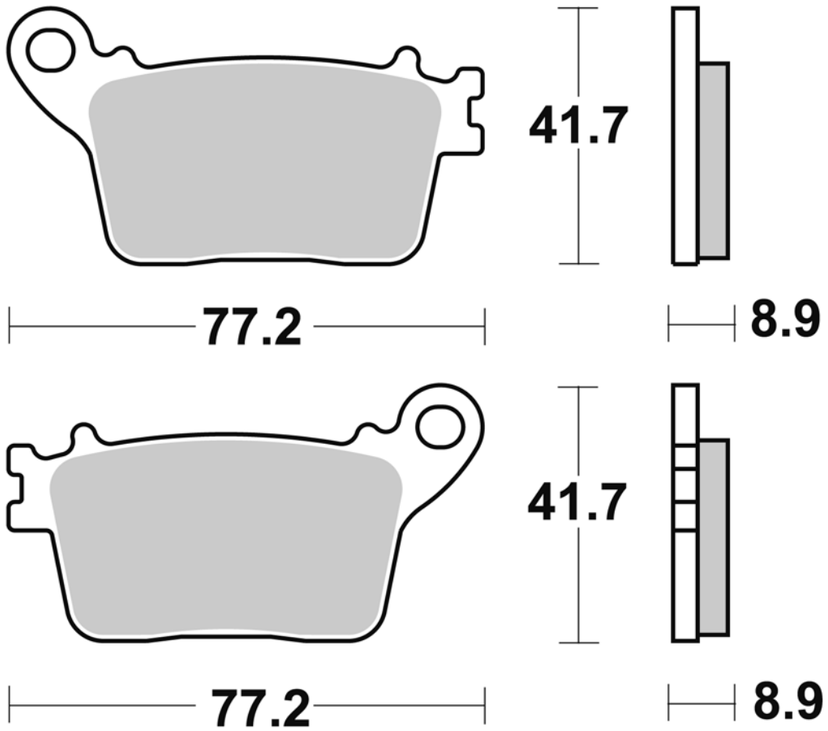

MODELLO MODEL	CC	ANNO YEAR	POSIZIONE POSITION
HONDA			
CB F HORNET	600	2007-2013	**R**
CBR F	600	2011-2013	**R**
CBR RR	600	2007-2014	**R**
CBR RR - ABS	600	2009-2014	**R**
CBR RR	1000	2006-2014	**R**
CBR RR - ABS	1000	2009-2014	**R**
CBR RR SP	1000	2014	**R**

MODELLO MODEL	CC	ANNO YEAR	POSIZIONE POSITION
KAWASAKI			
ZX6R NINJA	636	2013-2015	**R**
ZX6R NINJA ABS	636	2013-2015	**R**
ZX-10R	1000	2011-2015	**R**
ZX-10R ABS	1000	2011-2015	**R**
SUZUKI			
GSX R	600	2011-2014	**R**
GSX R	750	2011-2014	**R**
GSX R	1000	2009-2014	**R**

926

SM1
- Semimetallica polivalente
- Semi-metallic pad

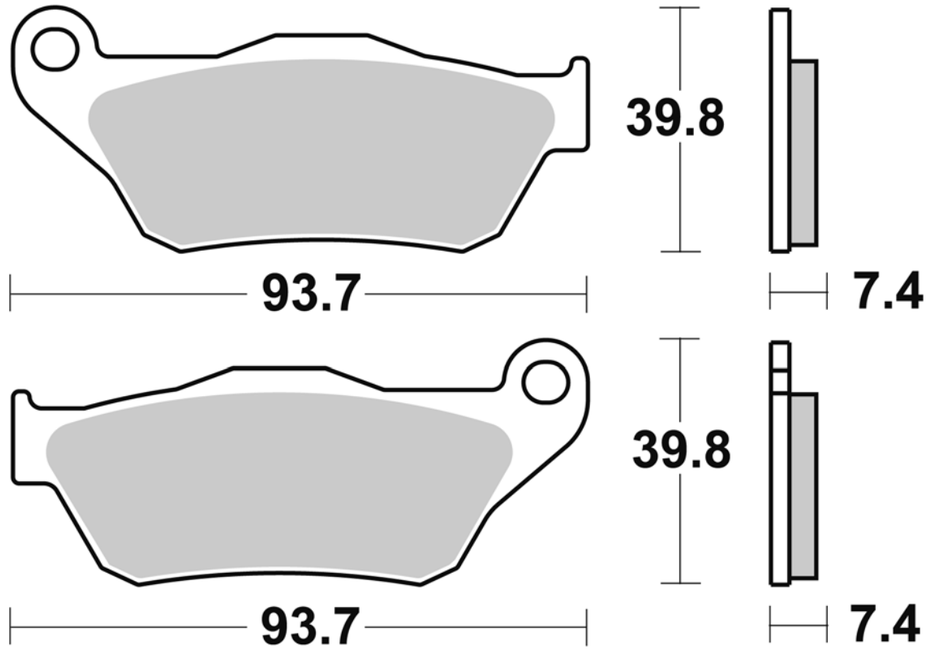

MODELLO MODEL	CC	ANNO YEAR	POSIZIONE POSITION
MBK			
SKYCRUISER	125	2006-2010	**FL**

MODELLO MODEL	CC	ANNO YEAR	POSIZIONE POSITION
YAMAHA			
X-MAX YP R	125	2006-2009	**FR**
X-MAX YP R	250	2005-2009	**FR**

927

P1R
- Sinterizzata racing
- Sintered pad racing use only

CM66
- Semimetallica uso racing
- Semi-metallic pad racing use only

CM55
- Sinterizzata stradale ant. uso sportivo
- Front sintered pad

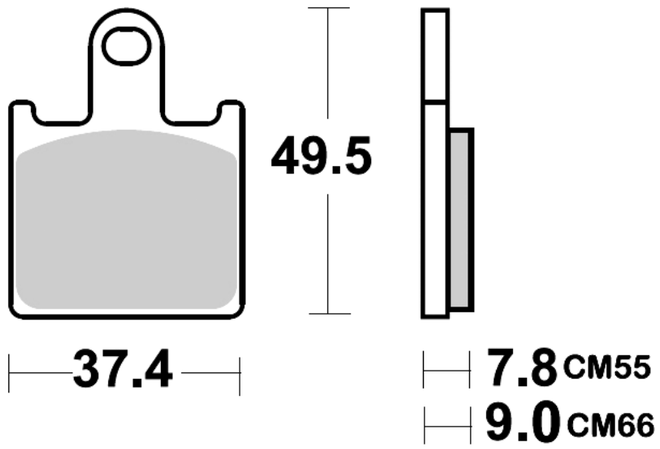

MODELLO MODEL	CC	ANNO YEAR	POSIZIONE POSITION
KAWASAKI			
ZX6R NINJA	600	2007-2014	**FL/FR**
Z 750 R	750	2011-2012	**FL/FR**
Z 750 R - ABS	750	2011-2012	**FL/FR**
Z 1000	1000	2007-2009	**FL/FR**

MODELLO MODEL	CC	ANNO YEAR	POSIZIONE POSITION
Z 1000 - ABS	1000	2007-2009	**FL/FR**
GTR	1400	2007-2014	**FL/FR**
ZZR	1400	2006-2007	**FL/FR**
ZZR ABS	1400	2008-2014	**FL/FR**

Le immagini hanno il solo scopo di presentare i prodotti.
The images used are aimed at presenting the products only.

FL > pastiglia anteriore sinistra / front left pad
FR > pastiglia anteriore destra / front right pad
R > pastiglia posteriore / rear pad

928

P1R
- Sinterizzata racing
- Sintered pad racing use only

CM66
- Semimetallica uso racing
- Semi-metallic pad racing use only

CM55
- Sinterizzata stradale ant. uso sportivo
- Front sintered pad

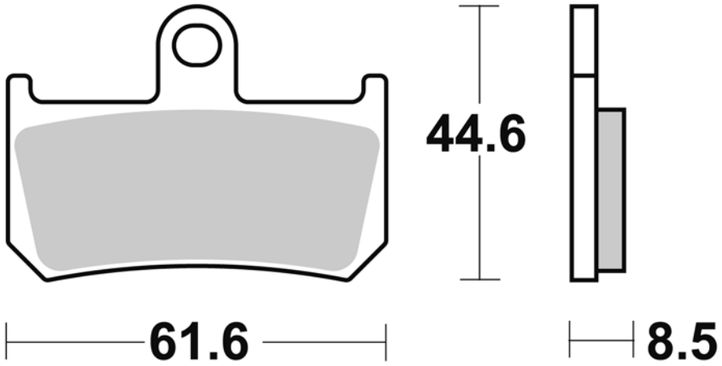

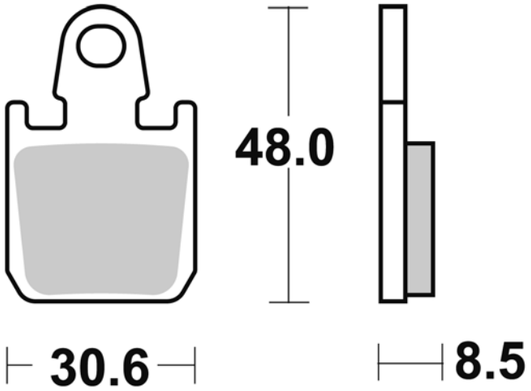

MODELLO MODEL	CC	ANNO YEAR	POSIZIONE POSITION
YAMAHA			
YZF R1	1000	2007-2014	FL/FR
MT01	1670	2007-2011	FL/FR
V MAX	1700	2009-2012	FL/FR

MODELLO MODEL	CC	ANNO YEAR	POSIZIONE POSITION

929

CM46
- Sinterizzata off-road uso racing
- Offroad sintered pad racing use

CM44
- Sinterizzata off-road
- Offroad sintered pad

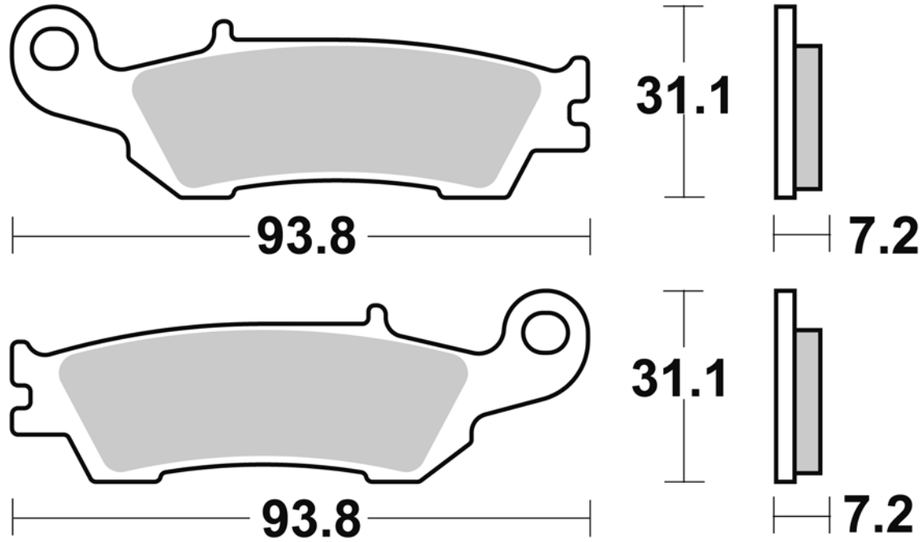

MODELLO MODEL	CC	ANNO YEAR	POSIZIONE POSITION
YAMAHA			
YZ	125	2008-2015	FL
YZ	250	2008-2014	FL

MODELLO MODEL	CC	ANNO YEAR	POSIZIONE POSITION
YZ F	250	2007-2015	FL
YZ F	450	2008-2015	FL

930

P1R
- Sinterizzata racing
- Sintered pad racing use only

CM66
- Semimetallica uso racing
- Semi-metallic pad racing use only

CM55
- Sinterizzata stradale ant. uso sportivo
- Front sintered pad

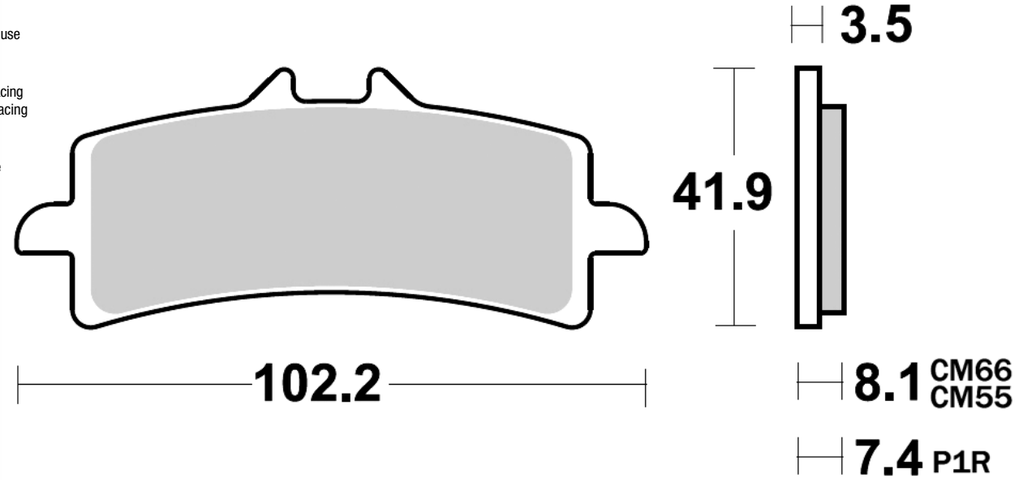

MODELLO MODEL	CC	ANNO YEAR	POSIZIONE POSITION
APRILIA			
RSV4 FACTORY	1000	2009-2011	FL/FR
RSV4 FACTORY APRC	1000	2011-2012	FL/FR
RSV4 R	1000	2009-2012	FL/FR
BIMOTA			
BB3	1000	2014	FL/FR
BMW			
HP4	1000	2013-2014	FL/FR
HP2 SPORT	1200	2008-2011	FL/FR

MODELLO MODEL	CC	ANNO YEAR	POSIZIONE POSITION
DUCATI			
848 EVO	850	2011-2013	FL/FR
DESMOSEDICI RR	1000	2008-2009	FL/FR
1098	1100	2007-2008	FL/FR
1098 S	1100	2007-2008	FL/FR
1098 S TRICOLORE	1100	2007-2008	FL/FR
HYPERMOTARD EVO SP	1100	2010-2012	FL/FR
HYPERMOTARD S	1100	2007-2009	FL/FR
STREETFIGHTER	1100	2009-2011	FL/FR

Le immagini hanno il solo scopo di presentare i prodotti.
The images used are aimed at presenting the products only.

FL > pastiglia anteriore sinistra / front left pad
FR > pastiglia anteriore destra / front right pad
R > pastiglia posteriore / rear pad

MODELLO MODEL	CC	ANNO YEAR	POSIZIONE POSITION
STREETFIGHTER S	1100	2009-2013	FL/FR
1198	1198	2009-2011	FL/FR
1198 S	1198	2009-2010	FL/FR
1198 SP	1198	2011	FL/FR
1098 R	1200	2008-2009	FL/FR
DIAVEL	1200	2011-2013	FL/FR
DIAVEL AMG	1200	2013	FL/FR
DIAVEL CARBON	1200	2011-2012	FL/FR
DIAVEL STRADA	1200	2014	FL/FR
MONSTER S	1200	2014	FL/FR
PANIGALE	1200	2012-2013	FL/FR
PANIGALE ABS	1200	2012-2014	FL/FR
PANIGALE R	1200	2014	FL/FR
PANIGALE S	1200	2012-2013	FL/FR
PANIGALE S ABS	1200	2012-2014	FL/FR
PANIGALE S TRICOLORE	1200	2012-2013	FL/FR
SUPERLEGGERA	1200	2014	FL/FR
HONDA			
CBR RR SP	1000	2014	FL/FR
HUSQVARNA			
NUDA R	900	2012-2013	FL/FR
NUDA R ABS	900	2013	FL/FR
KTM			
SMR	450	2014	FL

MODELLO MODEL	CC	ANNO YEAR	POSIZIONE POSITION
DUKE R	690	2013-2014	FL
SUPERMOTO R	990	2010-2012	FL/FR
RC8	1190	2008-2011	FL/FR
RC8 R	1190	2010-2012	FL/FR
SUPER DUKE R	1290	2014	FL/FR
MV AGUSTA			
F3 SERIE ORO	675	2012-2013	FL/FR
F3	800	2014	FL/FR
F4 312 R	1000	2008-2009	FL/FR
F4 FRECCE TRICOLORI	1000	2010-2012	FL/FR
F4 R	1000	2010-2013	FL/FR
F4 RR	1000	2010-2013	FL/FR
F4 RR CORSACORTA	1000	2011-2012	FL/FR
BRUTALE RR	1078	2008-2009	FL/FR
BRUTALE RR	1090	2010-2013	FL/FR
SUZUKI			
GSX R	600	2011-2014	FL/FR
GSX R	750	2011-2014	FL/FR
GSX R	1000	2012-2014	FL/FR
TRIUMPH			
DAYTONA R	675	2011-2013	FL/FR
SPEED TRIPLE R	1050	2012-2014	FL/FR
SPEED TRIPLE R ABS	1050	2012-2014	FL/FR

931

CM55
- Sinterizzata stradale ant. uso sportivo
- Front sintered pad

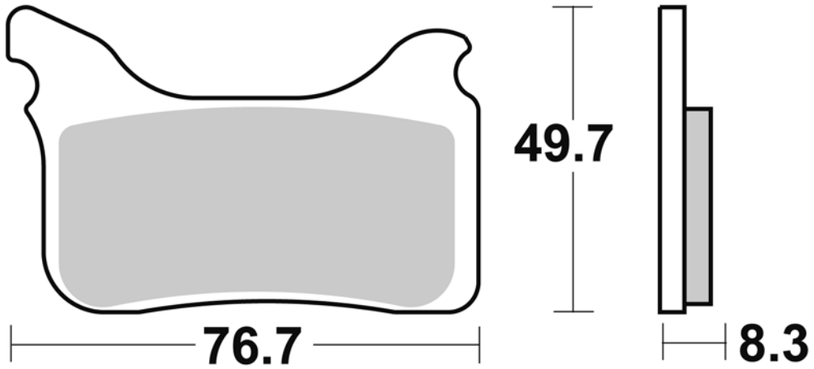

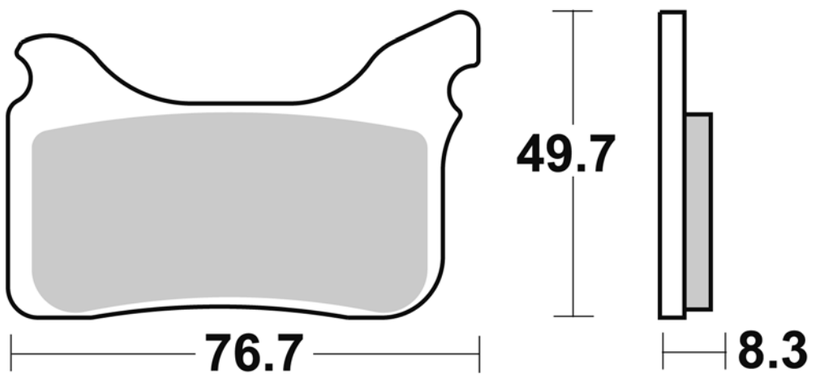

MODELLO MODEL	CC	ANNO YEAR	POSIZIONE POSITION
APRILIA			
SXV	450	2005-2011	FL
SXV	550	2005-2011	FL
PEGASO FACTORY	650	2007	FL
HUSABERG			
FS C	450	2005-2008	FL

MODELLO MODEL	CC	ANNO YEAR	POSIZIONE POSITION
FS E	450	2005-2008	FL
FS C	650	2005-2008	FL
FS E	650	2005-2008	FL
KTM			
SMR	450	2005-2006	FL
SMR	525	2005	FL

932

CM66
- Semimetallica uso racing
- Semi-metallic pad racing use only

CM55
- Sinterizzata stradale ant. uso sportivo
- Front sintered pad

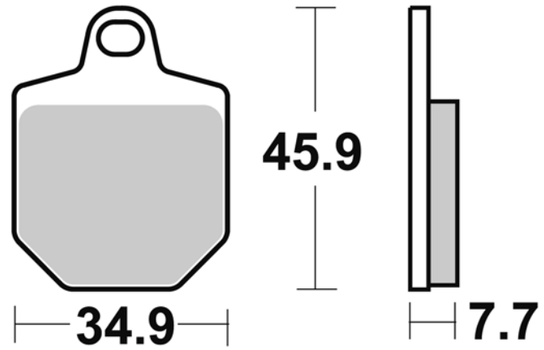

MODELLO MODEL	CC	ANNO YEAR	POSIZIONE POSITION
HONDA-HM			
CRM R SUPERMOTO	125	2007	FL
CRM X SUPERMOTO	250	2007	FL
CRM F450R SUPERMOTO	450	2007-2009	FL
CRM F450X SUPERMOTO	450	2007-2009	FL
CRM F490X SUPERMOTO	490	2007	FL

MODELLO MODEL	CC	ANNO YEAR	POSIZIONE POSITION
CRM F 500 X	500	2011	FL
HUSABERG			
FS	570	2010	FL
KTM			
SMR	450	2007-2013	FL
SMR	560	2006-2008	FL

933

CM55
- Sinterizzata stradale ant. uso sportivo
- Front sintered pad

SM1
- Semimetallica polivalente
- Semi-metallic pad

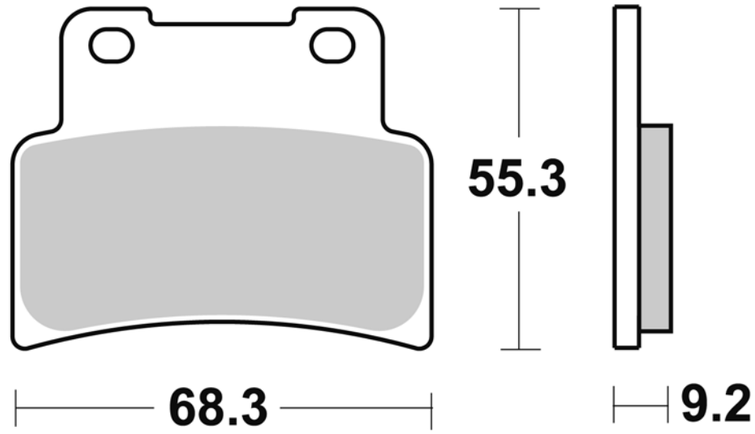

MODELLO MODEL	CC	ANNO YEAR	POSIZIONE POSITION
APRILIA			
RS	125	2006-2011	FR
DORSODURO	750	2008-2014	FL/FR
SHIVER GT	750	2009	FL/FR
SL SHIVER	750	2007-2014	FL/FR
MANA	850	2007-2011	FL/FR
MANA GT	850	2009-2013	FL/FR

MODELLO MODEL	CC	ANNO YEAR	POSIZIONE POSITION
KYMCO			
XCITING	400	2012-2013	FL/FR
SYM			
MAXSYM	400	2011	FL/FR

Le immagini hanno il solo scopo di presentare i prodotti.
The images used are aimed at presenting the products only.

FL > pastiglia anteriore sinistra / front left pad
FR > pastiglia anteriore destra / front right pad
R > pastiglia posteriore / rear pad

934

CM77
- Sinterizzata anteriore Harley Davidson
- Front cruiser sintered pad

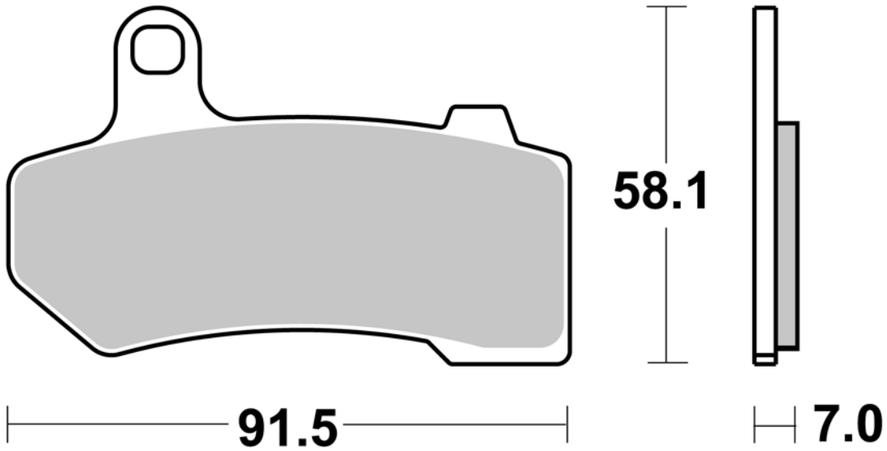

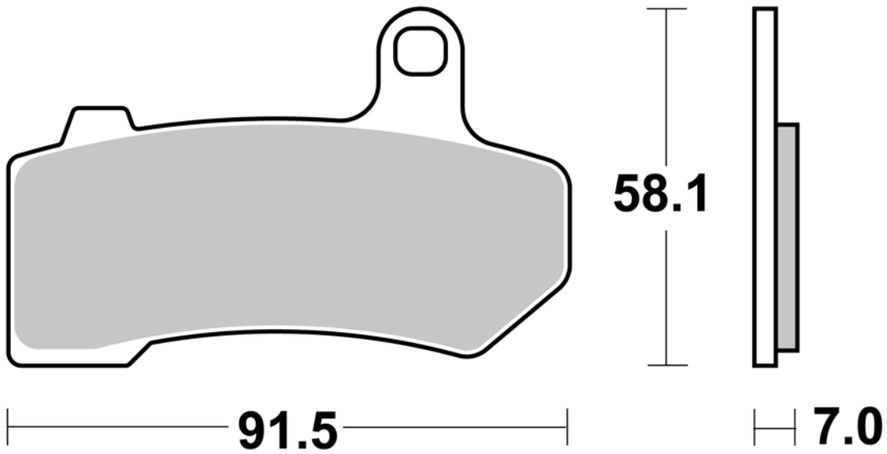

MODELLO MODEL	CC	ANNO YEAR	POSIZIONE POSITION
HARLEY D.			
VRSCA V-ROD	1130	2006-2008	**FL/FR**
VRSCA V-ROD	1130	2006-2008	**R**
VRSCAW V-ROD	1250	2008-2010	**FL/FR**
VRSCAW V-ROD	1250	2008-2010	**R**
VRSCDX NIGHT ROD SPECIAL	1250	2007-2014	**FL/FR**
VRSCDX NIGHT ROD SPECIAL	1250	2007-2014	**R**
VRSCF V-ROD MUSCLE	1250	2008-2014	**FL/FR**
VRSCF V-ROD MUSCLE	1250	2008-2014	**R**
FLHR/I ROAD KING	1584	2008-2010	**FL/FR**
FLHR/I ROAD KING	1584	2008-2010	**R**
FLHRC ROAD KING CLASSIC	1584	2008-2014	**FL/FR**
FLHRC ROAD KING CLASSIC	1584	2008-2014	**R**

MODELLO MODEL	CC	ANNO YEAR	POSIZIONE POSITION
FLHT/I ELECTRA GLIDE STANDARD	1584	2008-2010	**FL/FR**
FLHT/I ELECTRA GLIDE STANDARD	1584	2008-2010	**R**
FLHTC ELECTRA GLIDE CLASSIC	1584	2008-2013	**FL/FR**
FLHTC ELECTRA GLIDE CLASSIC	1584	2008-2013	**R**
FLHTCU ELECTRA GLIDE ULTRA CLASSIC	1584	2009-2013	**FL/FR**
FLHTCU ELECTRA GLIDE ULTRA CLASSIC	1584	2009-2013	**R**
FLHX STREET GLIDE	1584	2008-2013	**FL/FR**
FLHX STREET GLIDE	1584	2008-2013	**R**
FLHX STREET GLIDE	1690	2010-2014	**FL/FR**
FLHX STREET GLIDE	1690	2010-2014	**R**
FLTRX ROAD GLIDE CUSTOM	1690	2010-2013	**FL/FR**
FLTRX ROAD GLIDE CUSTOM	1690	2010-2013	**R**

935

CM44
- Sinterizzata off-road
- Offroad sintered pad

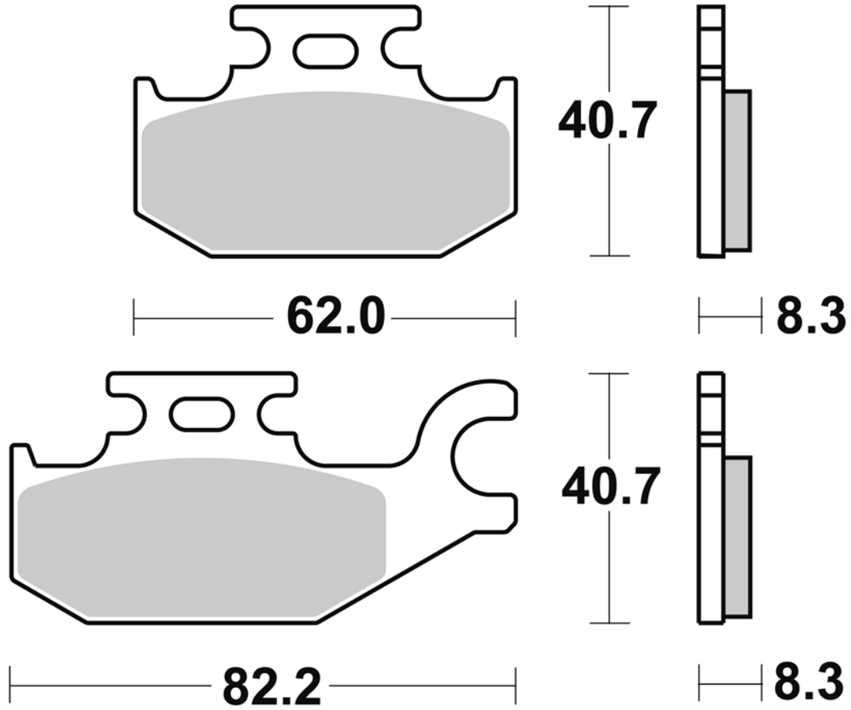

MODELLO MODEL	CC	ANNO YEAR	POSIZIONE POSITION
SUZUKI			
LTA F	400	2008	**FL**
LTA X	450	2007-2009	**FL**
LT A KING QUAD	700	2005-2007	**FL**
LTA X	750	2007-2008	**FL**

MODELLO MODEL	CC	ANNO YEAR	POSIZIONE POSITION

Le immagini hanno il solo scopo di presentare i prodotti.
The images used are aimed at presenting the products only.

FL > pastiglia anteriore sinistra / front left pad
FR > pastiglia anteriore destra / front right pad
R > pastiglia posteriore / rear pad

936

CM44
- Sinterizzata off-road
- Offroad sintered pad

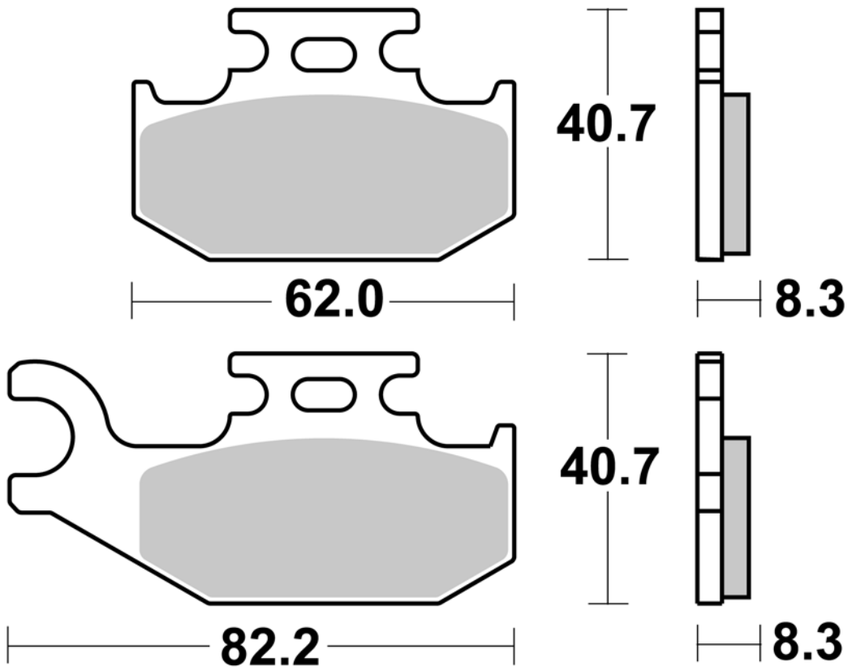

MODELLO MODEL	CC	ANNO YEAR	POSIZIONE POSITION
SUZUKI			
LTA F	400	2008	**FR**
LTA X	450	2007-2009	**FR**
LT A KING QUAD	700	2005-2007	**FR**
LTA X	750	2007-2008	**FR**

MODELLO MODEL	CC	ANNO YEAR	POSIZIONE POSITION
YAMAHA			
YXR RHINO	450	2006-2008	**R**
YXR RHINO	660	2004-2007	**R**
YFM RN RAPTOR	700	2006-2009	**R**
YXR RHINO	700	2008-2012	**R**

938

CM56
- Sinterizzata stradale post. uso sportivo
- Rear sintered pad

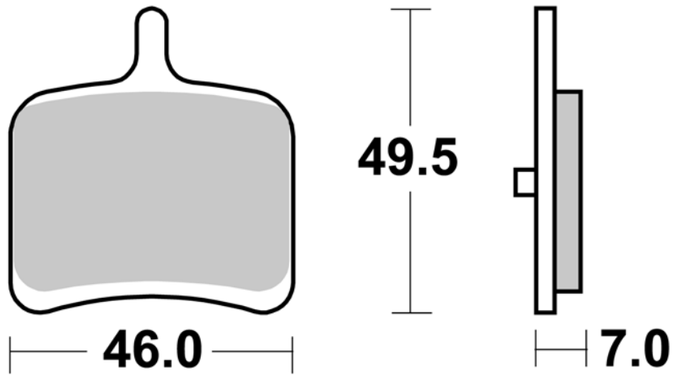

MODELLO MODEL	CC	ANNO YEAR	POSIZIONE POSITION
BUELL			
1125 CR	1125	2008-2009	**R**
1125 R	1125	2008-2009	**R**

MODELLO MODEL	CC	ANNO YEAR	POSIZIONE POSITION

939

CM55
- Sinterizzata stradale ant. uso sportivo
- Front sintered pad

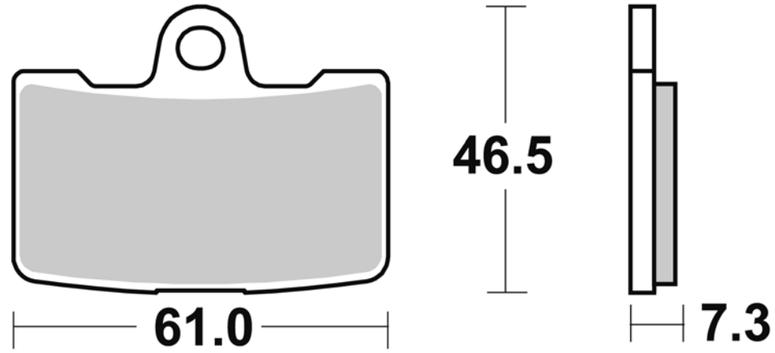

MODELLO MODEL	CC	ANNO YEAR	POSIZIONE POSITION
BUELL			
1125 CR	1125	2008-2009	**FR**

MODELLO MODEL	CC	ANNO YEAR	POSIZIONE POSITION
1125 R	1125	2008-2009	**FR**
XB12SS / SCG	1200	2009	**FR**

940

CM44
- Sinterizzata off-road
- Offroad sintered pad

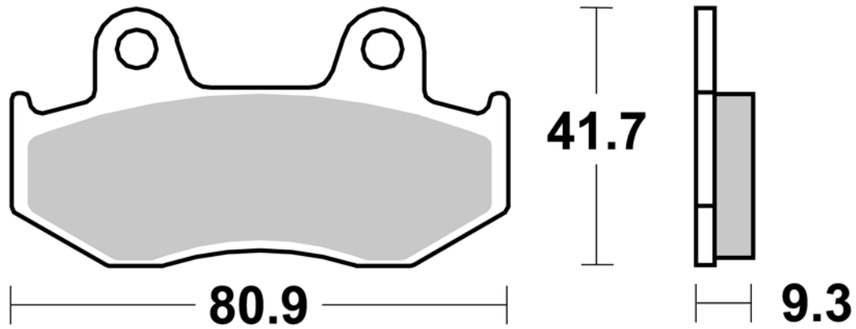

MODELLO MODEL	CC	ANNO YEAR	POSIZIONE POSITION
YAMAHA			
YFZ R	450	2011-2014	**R**
YFZ S	450	2006-2009	**R**

941

CM66
- Semimetallica uso racing
- Semi-metallic pad racing use only

CM55
- Sinterizzata stradale ant. uso sportivo
- Front sintered pad

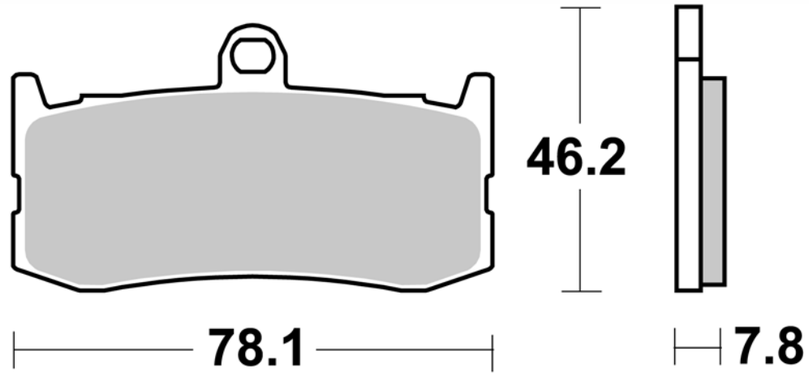

MODELLO MODEL	CC	ANNO YEAR	POSIZIONE POSITION
TRIUMPH			
DAYTONA	675	2009-2013	**FL/FR**

Le immagini hanno il solo scopo di presentare i prodotti.
The images used are aimed at presenting the products only.

FL > pastiglia anteriore sinistra / front left pad
FR > pastiglia anteriore destra / front right pad
R > pastiglia posteriore / rear pad

942

CM56
- Sinterizzata stradale post. uso sportivo
- Rear sintered pad

SM1
- Semimetallica polivalente
- Semi-metallic pad

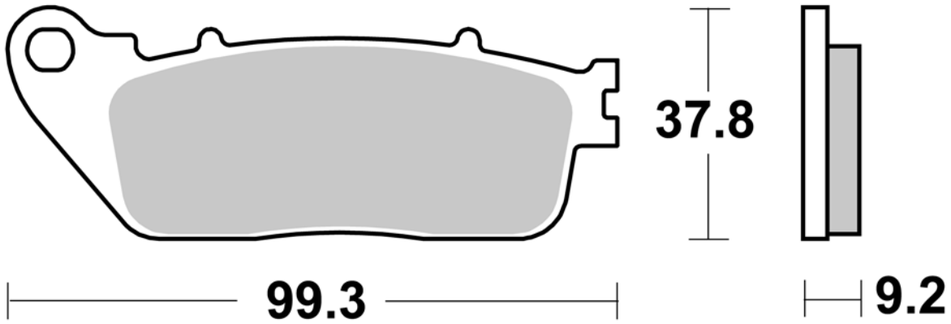

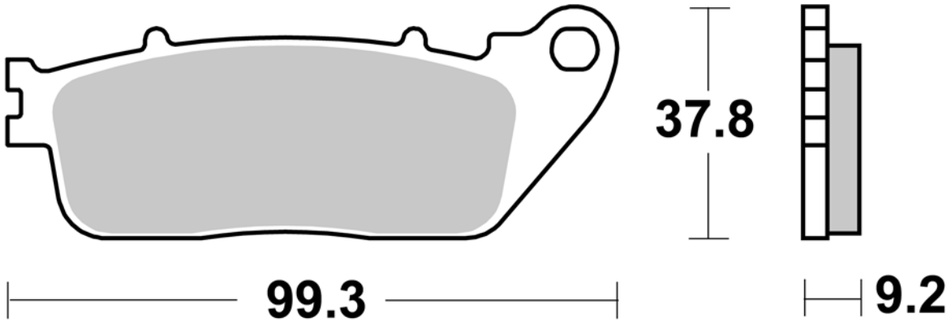

MODELLO MODEL	CC	ANNO YEAR	POSIZIONE POSITION
HONDA			
CROSSRUNNER	800	2011-2014	**R**
VFR F	800	2014	**R**
CB 1000 R	1000	2008-2013	**R**
CB 1000 R - ABS	1000	2009-2014	**R**
VFR F	1200	2010-2014	**R**

943

CM77
- Sinterizzata anteriore Harley Davidson
- Front cruiser sintered pad

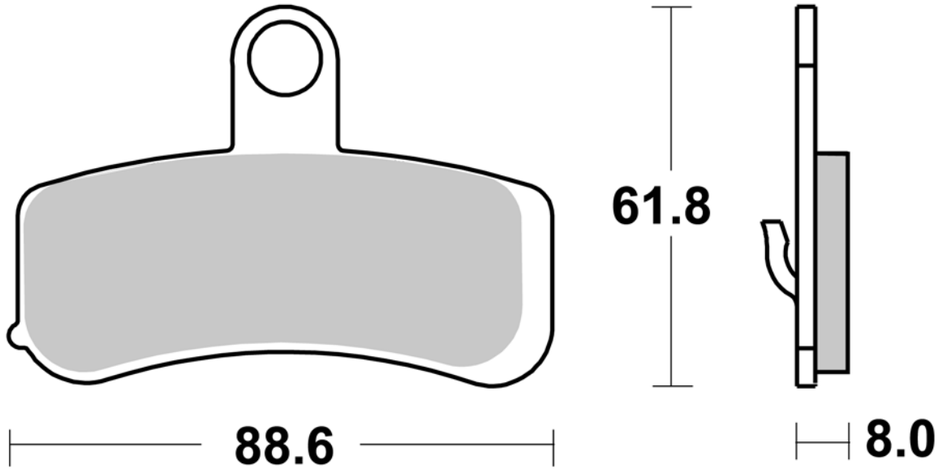

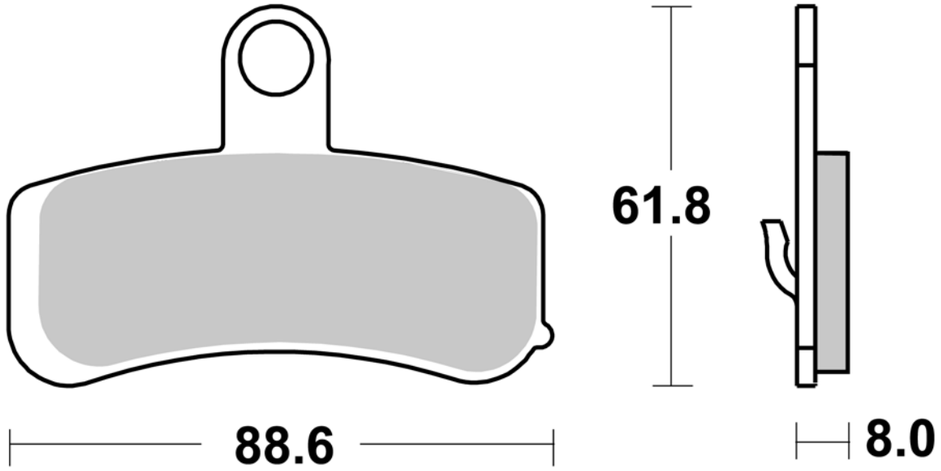

MODELLO MODEL	CC	ANNO YEAR	POSIZIONE POSITION
HARLEY D.			
FLSTB FAT BOY SPECIAL	1584	2010-2013	**FL**
FLSTC HERITAGE SOFTAIL CLASSIC	1584	2007-2014	**FL**
FLSTF FAT BOY	1584	2008-2014	**FL**
FLSTN SOFTAIL DELUXE	1584	2008-2014	**FL**
FXCW ROCKER	1584	2008-2009	**FL**
FXCWC ROCKER C	1584	2008-2013	**FL**
FXD DYNA SUPER GLIDE	1584	2008-2010	**FL**
FXDB DYNA STREET BOB	1584	2008-2014	**FL**
FXDC DYNA SUPER GLIDE CUSTOM	1584	2008-2014	**FL**

MODELLO MODEL	CC	ANNO YEAR	POSIZIONE POSITION
FXDF FAT BOB	1584	2008-2010	**FL/FR**
FXDF FAT BOB	1584	2011-2014	**FL**
FXDL DYNA LOW RIDER	1584	2008-2010	**FL**
FXDWG DYNA WIDE GLIDE	1584	2008-2014	**FL**
FXS BLACKLINE	1584	2011-2013	**FL**
FXSTB NIGHT TRAIN	1584	2008-2010	**FL**
FXSTC SOFTAIL CUSTOM	1584	2008-2010	**FL**
FLD SWITCHBACK	1690	2012-2014	**FL**
FLS SOFTAIL SLIM	1690	2012-2014	**FL**
FLHTCUSE BLK ULTRA CLASSIC ELECTRA GLIDE	1800	2008-2014	**FL/FR**
FLHTCUSE BLK ULTRA CLASSIC ELECTRA GLIDE	1800	2008-2014	**R**

Le immagini hanno il solo scopo di presentare i prodotti.
The images used are aimed at presenting the products only.

FL > pastiglia anteriore sinistra / front left pad
FR > pastiglia anteriore destra / front right pad
R > pastiglia posteriore / rear pad

944

CM88
- Sinterizzata posteriore Harley Davidson
- Rear cruiser sintered pad

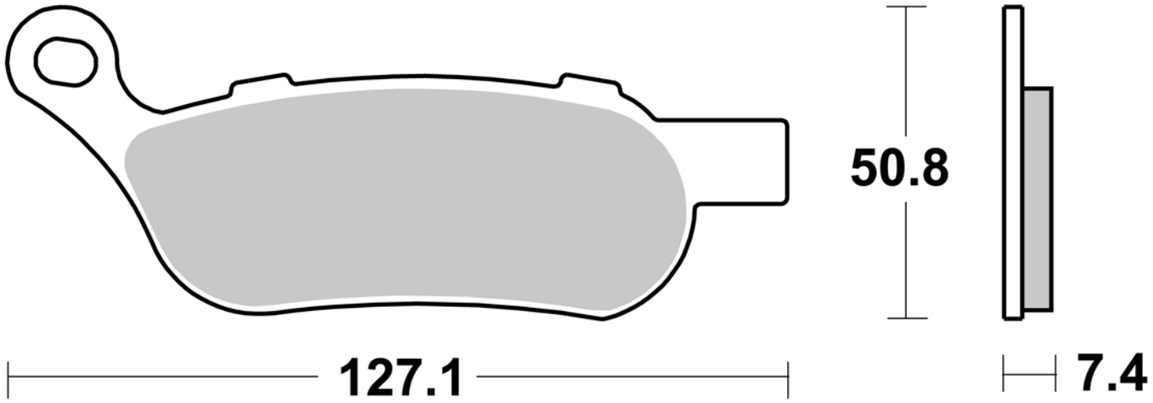

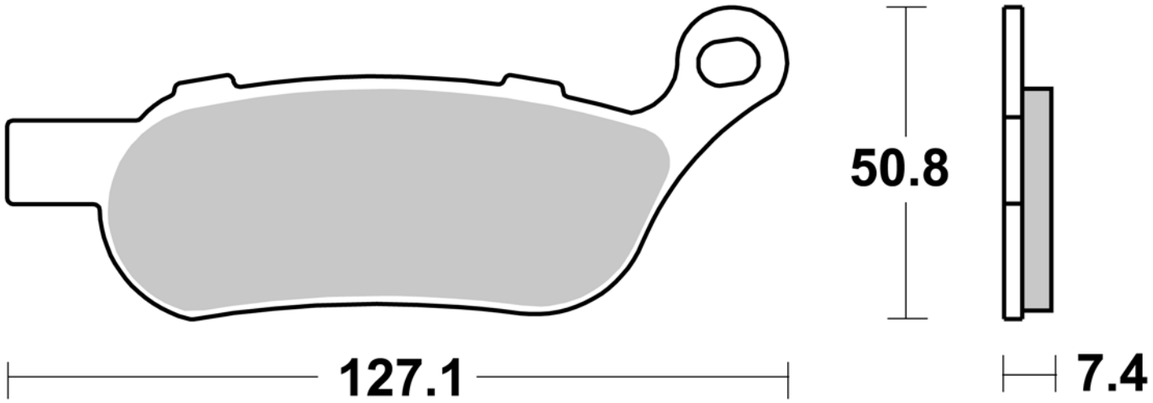

MODELLO MODEL	CC	ANNO YEAR	POSIZIONE POSITION
HARLEY D.			
FLSTB FAT BOY SPECIAL	1584	2010-2013	**R**
FLSTB SOFTAIL CROSS BONES	1584	2008-2011	**R**
FLSTC HERITAGE SOFTAIL CLASSIC	1584	2008-2014	**R**
FLSTF FAT BOY	1584	2008-2014	**R**
FLSTN SOFTAIL DELUXE	1584	2008-2014	**R**
FXCW ROCKER	1584	2008-2009	**R**
FXCWC ROCKER C	1584	2008-2013	**R**
FXD DYNA SUPER GLIDE	1584	2008-2010	**R**
FXDB DYNA STREET BOB	1584	2008-2014	**R**

MODELLO MODEL	CC	ANNO YEAR	POSIZIONE POSITION
FXDC DYNA SUPER GLIDE CUSTOM	1584	2008-2014	**R**
FXDF FAT BOB	1584	2008-2014	**R**
FXDL DYNA LOW RIDER	1584	2008-2010	**R**
FXDWG DYNA WIDE GLIDE	1584	2008-2014	**R**
FXS BLACKLINE	1584	2011-2013	**R**
FXSTB NIGHT TRAIN	1584	2008-2010	**R**
FXSTC SOFTAIL CUSTOM	1584	2008-2010	**R**
FLD SWITCHBACK	1690	2012-2014	**R**
FLS SOFTAIL SLIM	1690	2012-2014	**R**

945

P30
- Sinterizzata scooter
- Scooter sintered pad

SM1
- Semimetallica polivalente
- Semi-metallic pad

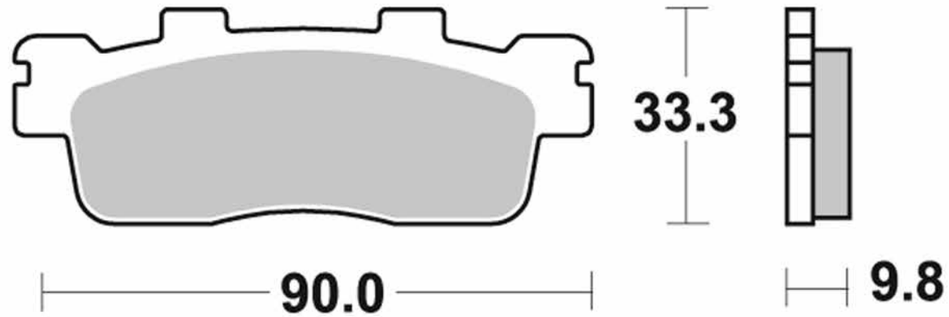

MODELLO MODEL	CC	ANNO YEAR	POSIZIONE POSITION
KYMCO			
DOWNTOWN i	125	2009-2014	**R**
K-XCT	125	2012-2014	**R**
SUPER DINK	125	2009-2013	**R**
DOWNTOWN i	200	2010-2014	**R**

MODELLO MODEL	CC	ANNO YEAR	POSIZIONE POSITION
DOWNTOWN i	300	2009-2014	**R**
DOWNTOWN i ABS	300	2010-2014	**R**
PEOPLE GTI	300	2010-2014	**R**
PEOPLE GTI ABS	300	2012	**R**
SUPER DINK	300	2009-2012	**R**

947

P1R
- Sinterizzata racing
- Sintered pad racing use only

CM66
- Semimetallica uso racing
- Semi-metallic pad racing use only

CM55
- Sinterizzata stradale ant. uso sportivo
- Front sintered pad

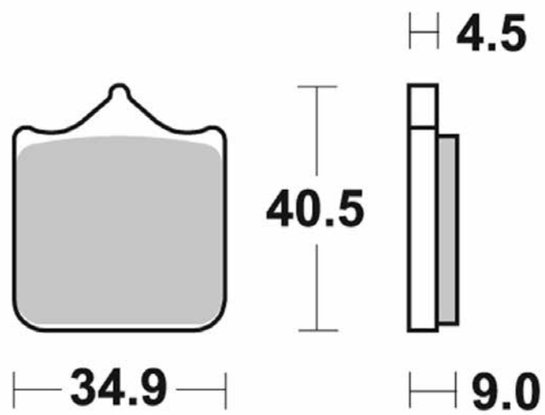

MODELLO MODEL	CC	ANNO YEAR	POSIZIONE POSITION
BMW			
S 1000 R	1000	2014	**FL/FR**
S 1000 RR	1000	2010-2014	**FL/FR**

MODELLO MODEL	CC	ANNO YEAR	POSIZIONE POSITION

Le immagini hanno il solo scopo di presentare i prodotti.
The images used are aimed at presenting the products only.

FL > pastiglia anteriore sinistra / front left pad
FR > pastiglia anteriore destra / front right pad
R > pastiglia posteriore / rear pad

948

SM1
- Semimetallica polivalente
- Semi-metallic pad

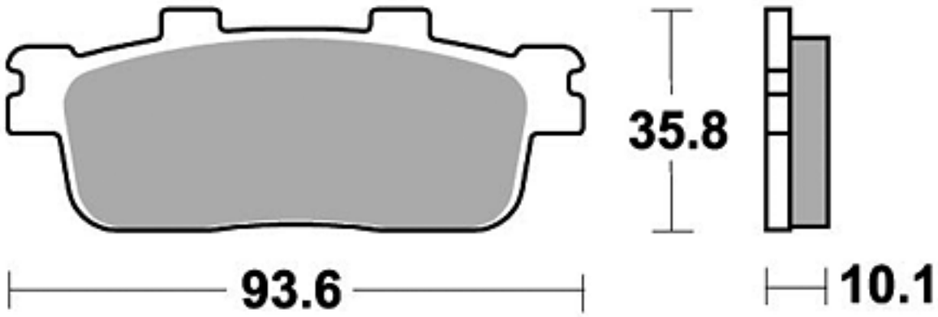

MODELLO MODEL	CC	ANNO YEAR	POSIZIONE POSITION
KYMCO			
G DINK	125	2012	R
PEOPLE GTI	125	2010-2014	R
SYM			
GTS JOYMAX	125	2006-2009	FL
GTS JOYMAX	125	2006-2009	R
HD EVO i	125	2007-2011	R
HD2	125	2010-2011	R
JOYRIDE	125	2007-2009	R
JOYRIDE EVO	125	2009-2013	R
SB NI	125	2011	FL
VOYAGER	125	2006-2009	FL
VOYAGER	125	2006-2009	R

MODELLO MODEL	CC	ANNO YEAR	POSIZIONE POSITION
WOLF	125	2011	FL
H 200 SE	200	2006	R
HD EVO i	200	2007-2012	R
HD S EVO	200	2007	R
HD2 i	200	2010-2011	R
JOYRIDE	200	2007-2009	R
JOYRIDE EVO	200	2009-2013	R
TRACKRUNNER	200	2006-2009	R
JOYMAX	250	2003-2009	R
QUADLANDER	250	2005-2009	R
CITY MAX	300	2006	R
JOYMAX	300	2008-2009	R
JOYMAX EVO	300	2009-2011	R

949

CM44
- Sinterizzata off-road
- Offroad sintered pad

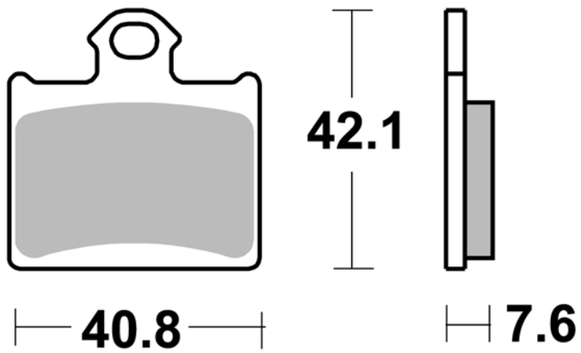

MODELLO MODEL	CC	ANNO YEAR	POSIZIONE POSITION
HUSQVARNA			
CR	65	2011-2012	R
TC 17/14	85	2014	R
TC 19/16	85	2014	R

MODELLO MODEL	CC	ANNO YEAR	POSIZIONE POSITION
KTM			
SX	85	2011-2014	R
SX 19/16	85	2013-2014	R
FREERIDE R	250	2012-2015	R
FREERIDE	350	2012-2015	R
FREERIDE E	350	2012-2013	R

950

CM55
- Sinterizzata stradale ant. uso sportivo
- Front sintered pad

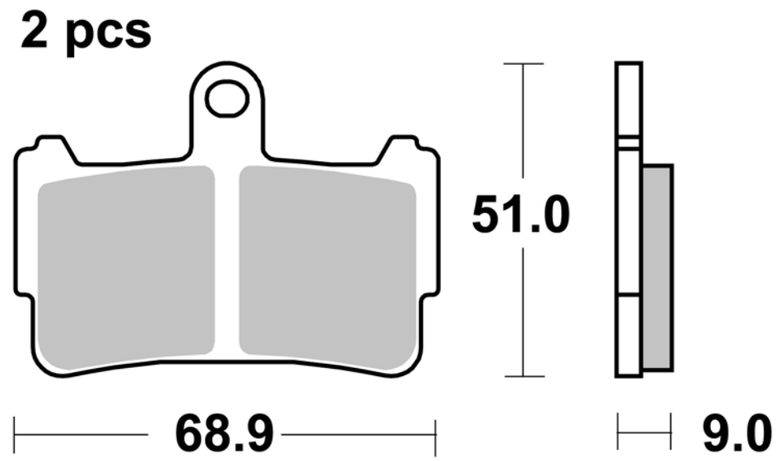

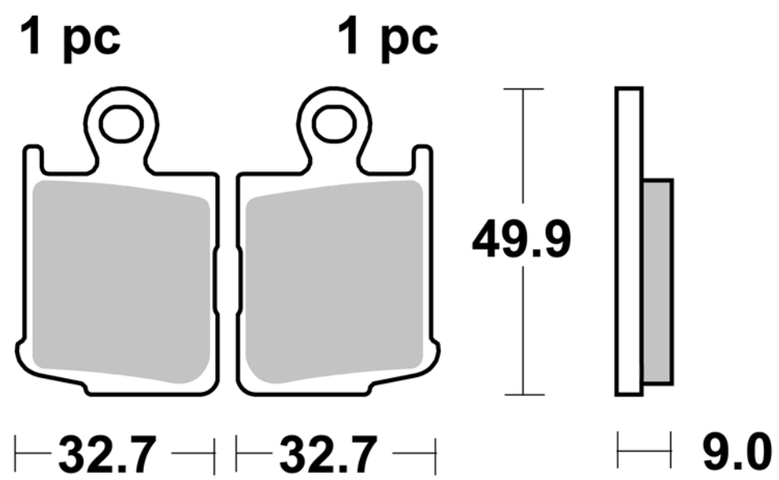

MODELLO MODEL	CC	ANNO YEAR	POSIZIONE POSITION
HONDA			
VFR F	1200	2010-2014	FL/FR
VFR F DCT	1200	2010-2014	FL/FR

Le immagini hanno il solo scopo di presentare i prodotti.
The images used are aimed at presenting the products only.

FL > pastiglia anteriore sinistra / front left pad
FR > pastiglia anteriore destra / front right pad
R > pastiglia posteriore / rear pad

951

CM88
- Sinterizzata posteriore Harley Davidson
- Rear cruiser sintered pad

SM1
- Semimetallica polivalente
- Semi-metallic pad

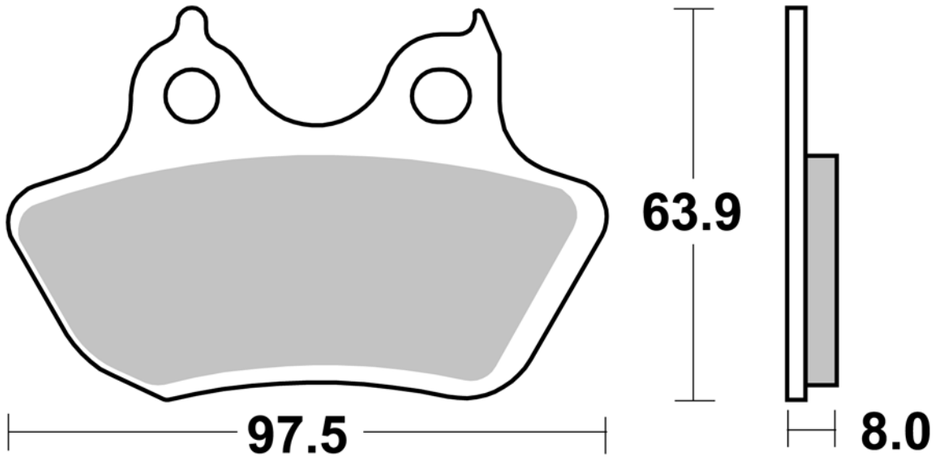

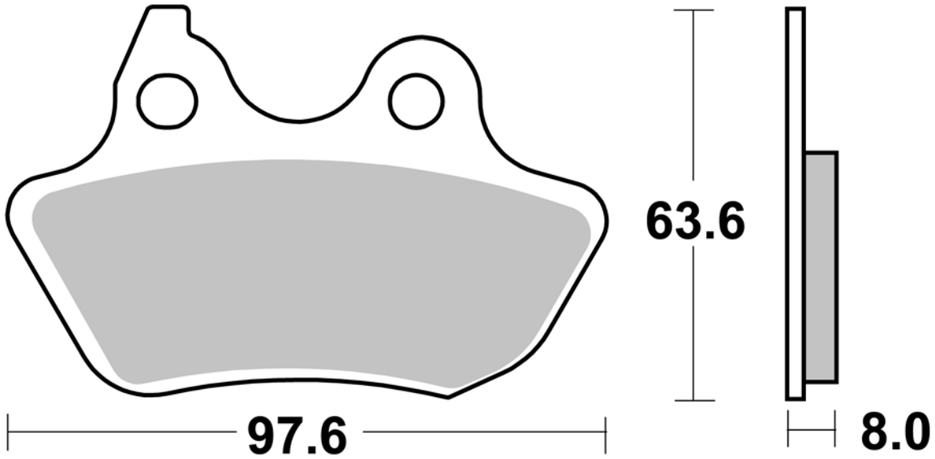

MODELLO MODEL	CC	ANNO YEAR	POSIZIONE POSITION
HARLEY D.			
VRSCB V-ROD	1130	2004	R
XL 1200 SPORTSTER CUSTOM	1200	2000-2003	R
FLHR/I ROAD KING	1450	2000-2007	R
FLHRS/I ROAD KING CUSTOM	1450	2004-2006	R
FLHTC ELECTRA GLIDE CLASSIC	1450	2000-2006	R
FLSTC/I HERITAGE SOFTAIL CLASSIC	1450	2000-2004	R
FLSTC/I SOFTAIL	1450	2005-2006	R
FLSTI HERITAGE SOFTAIL	1450	2006	R
FLSTN SOFTAIL DELUXE	1450	2005-2006	R
FLSTSC/I SPRINGER SOFTAIL CLASSIC	1450	2005-2006	R
FXDI DYNA SUPER GLIDE	1450	2004-2006	R
FXDI SUPER GLIDE	1450	2006	R
FXDS DYNA CONVERTIBLE	1450	2000-2002	R

MODELLO MODEL	CC	ANNO YEAR	POSIZIONE POSITION
FXDWG DYNA WIDE GLIDE	1450	2000-2007	R
FXDXT DYNA SUPER GLIDE T-SPORT	1450	2000-2003	R
FLHTC ELECTRA GLIDE CLASSIC	1584	2007	R
FLSTC HERITAGE SOFTAIL CLASSIC	1584	2007	R
FLSTN SOFTAIL DELUXE	1584	2007	R
FLSTSC/I SOFTAIL	1584	2007	R
FXD DYNA SUPER GLIDE	1584	2007	R
FXDB DYNA STREET BOB	1584	2007	R
FXDC DYNA SUPER GLIDE CUSTOM	1584	2007	R
FXDWG DYNA WIDE GLIDE	1584	2007	R
FXST SOFTAIL STANDARD	1584	2007	R
FXSTB/I NIGHT TRAIN	1584	2007	R
FXSTC SOFTAIL CLASSIC	1584	2007	R
FXSTD/I SOFTAIL DEUCE	1584	2007	R

952

CM55
- Sinterizzata stradale ant. uso sportivo
- Front sintered pad

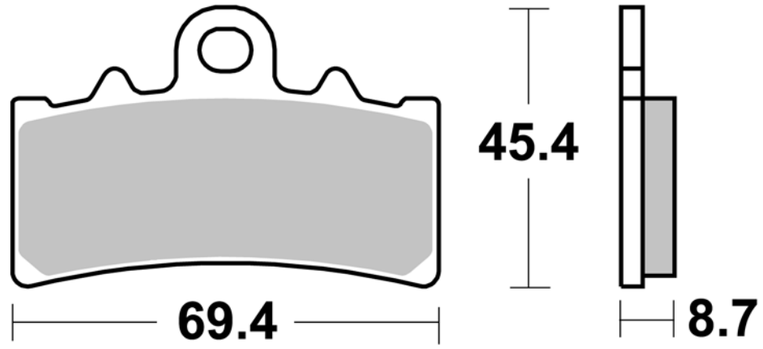

MODELLO MODEL	CC	ANNO YEAR	POSIZIONE POSITION
KTM			
DUKE	125	2011-2014	FL
RC	125	2014	FL
DUKE	200	2012-2014	FL

MODELLO MODEL	CC	ANNO YEAR	POSIZIONE POSITION
RC	200	2014	FL
DUKE	390	2013-2014	FL
RC	390	2014	FL

953

SM1
- Semimetallica polivalente
- Semi-metallic pad

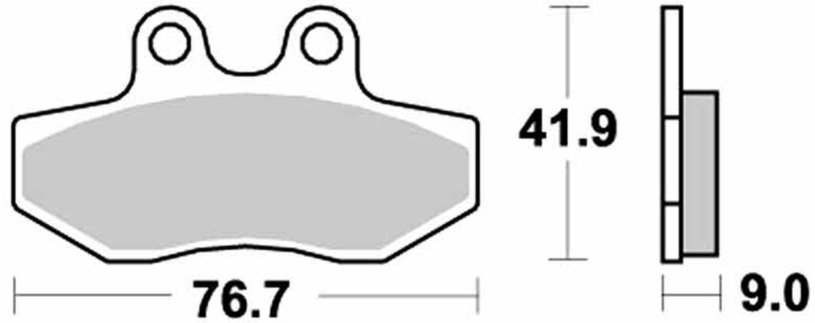

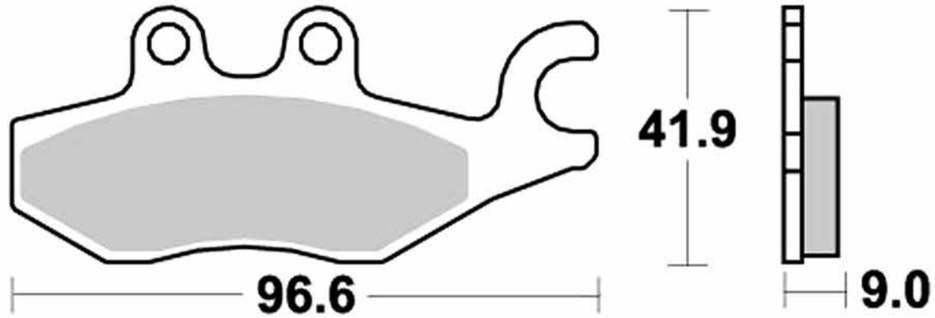

MODELLO MODEL	CC	ANNO YEAR	POSIZIONE POSITION
PIAGGIO			
BEVERLY RST 4T	125	2010-2013	R
X EVO	125	2007-2012	R
X10	125	2012-2013	FR
X10	125	2012-2013	R
X10 EXECUTIVE	125	2012-2013	FR
X10 EXECUTIVE	125	2012-2013	R
X7	125	2008-2009	R
X9 EVOLUTION (HENGTONG CALIPER)	125	2005-2007	FR
MP3 LT	250	2009	R
MP3 MIC	250	2008-2009	R
X EVO	250	2007-2013	R
X7	250	2008-2009	R
X7	250	2008-2009	R
X9	250	2005-2006	FR
X9 EVOLUTION	250	2005-2006	FR
BEVERLY	300	2011-2013	R

MODELLO MODEL	CC	ANNO YEAR	POSIZIONE POSITION
MP3 IE LT	300	2010-2011	R
MP3 LT	300	2010-2011	R
MP3 LT IBRIDO	300	2010-2013	R
MP3 MIC	300	2010	R
X7 EVO	300	2009-2011	R
X7 EVO	300	2011	R
BEVERLY SPORT TOURING	350	2011-2014	R
X10	350	2012-2013	FR
X10	350	2012-2013	R
X10 EXECUTIVE	350	2012-2013	FR
X10 EXECUTIVE	350	2012-2013	R
X EVO	400	2007-2011	FR
X8	400	2006-2008	FR
MP3 EFI	500	2009-2010	R
X10 EXECUTIVE	500	2012-2013	FR
X10 EXECUTIVE	500	2012-2013	R

Le immagini hanno il solo scopo di presentare i prodotti.
The images used are aimed at presenting the products only.

FL > pastiglia anteriore sinistra / front left pad
FR > pastiglia anteriore destra / front right pad
R > pastiglia posteriore / rear pad

954

SM1
- Semimetallica polivalente
- Semi-metallic pad

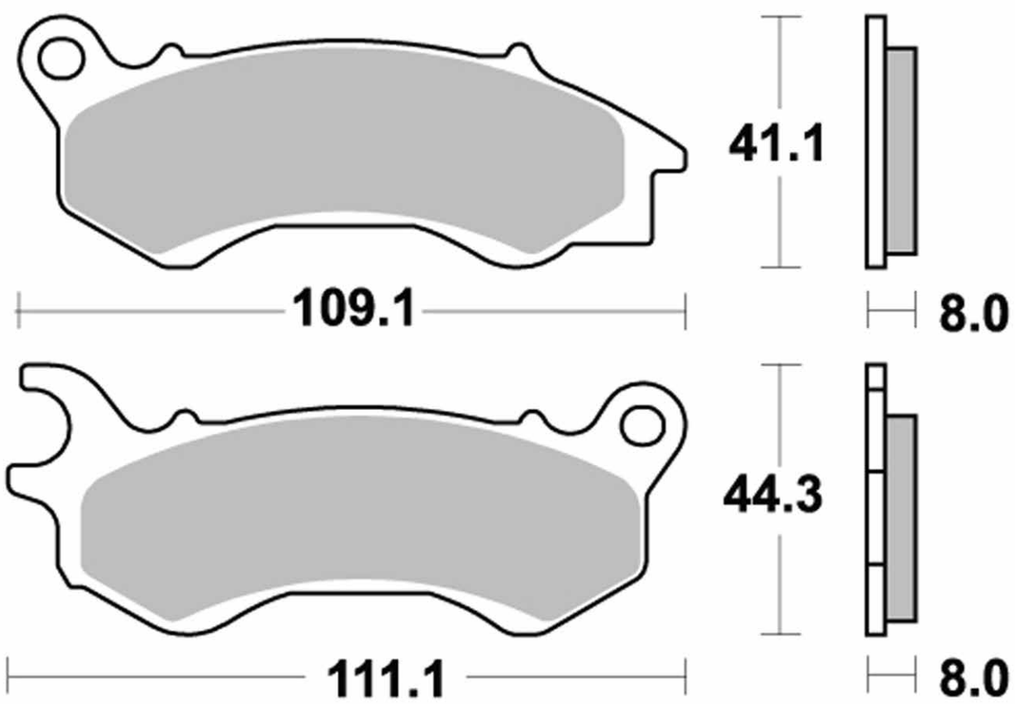

MODELLO MODEL	CC	ANNO YEAR	POSIZIONE POSITION
HONDA			
NSC R (Rear Drum Model)	50	2012-2014	**FL**
VISION 14 WHEEL (Rear Drum Model)	50	2012-2014	**FL**
VISION 16 WHEEL (Rear Drum Model)	50	2012-2014	**FL**
VISION 14 WHEEL (Rear Drum Model)	110	2012-2013	**FL**

MODELLO MODEL	CC	ANNO YEAR	POSIZIONE POSITION
VISION 16 WHEEL (Rear Drum Model)	110	2012-2013	**FL**
PCX (Rear Drum Model)	125	2009-2013	**FL**
SH MODE (Rear Drum Model)	125	2014	**FL**
PCX (Rear Drum Model)	150	2013	**FL**

955

CM44
- Sinterizzata off-road
- Offroad sintered pad

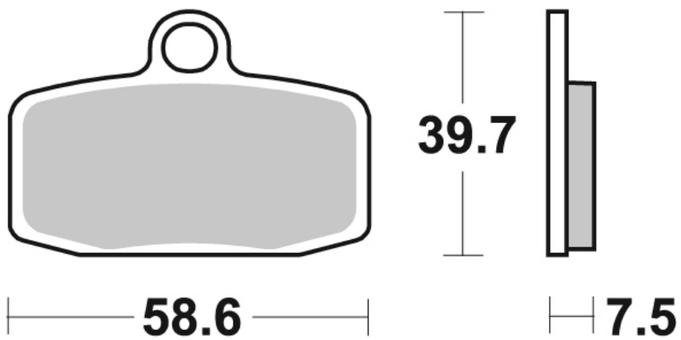

MODELLO MODEL	CC	ANNO YEAR	POSIZIONE POSITION
HUSQVARNA			
TC 17/14	85	2014	**FL**
TC 19/16	85	2014	**FL**
KTM			
SX	85	2012-2014	**FL**

MODELLO MODEL	CC	ANNO YEAR	POSIZIONE POSITION
SX 19/16	85	2013-2014	**FL**
FREERIDE R	250	2012-2015	**FL**
FREERIDE	350	2012-2015	**FL**
FREERIDE E	350	2012-2013	**FL**

956

CM56
- Sinterizzata stradale post. uso sportivo
- Rear sintered pad

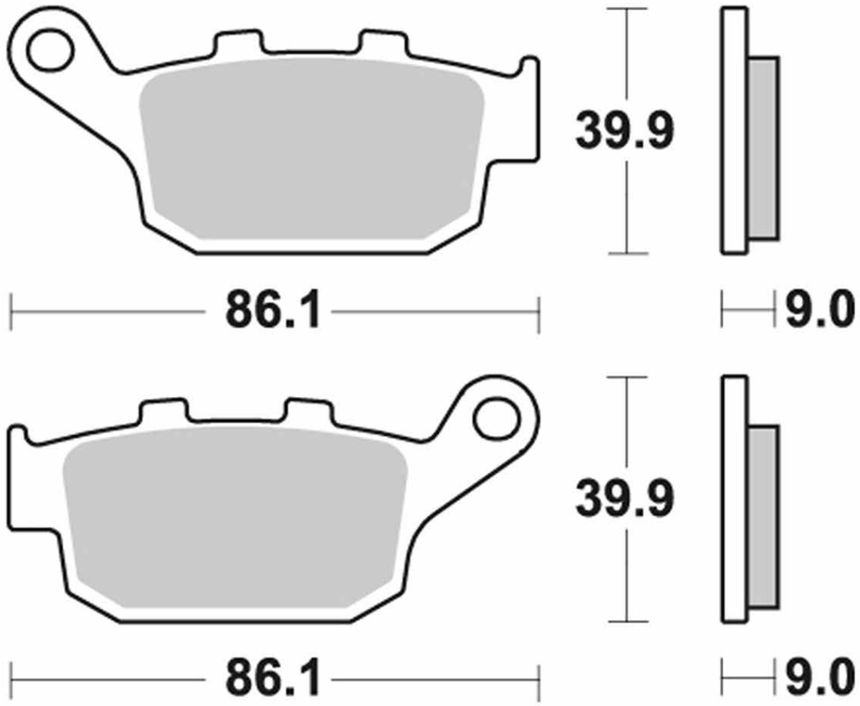

MODELLO MODEL	CC	ANNO YEAR	POSIZIONE POSITION
HONDA			
CBR R	250	2011-2013	**R**
CBR R ABS	250	2011-2013	**R**
CBR R ABS	300	2014	**R**
CB F	500	2013-2014	**R**
CB X	500	2013-2014	**R**
CBR R	500	2013-2014	**R**
CB F	650	2014	**R**
CBR F	650	2014	**R**
CTX DCT ABS	700	2014	**R**
CTX N DCT ABS	700	2014	**R**

MODELLO MODEL	CC	ANNO YEAR	POSIZIONE POSITION
KAWASAKI			
Z 750 R	750	2011-2012	**R**
Z 750 R - ABS	750	2011-2012	**R**
Z 800	800	2013	**R**
Z 800 ABS	800	2013	**R**
Z 800e	800	2013	**R**
Z 800e ABS	800	2013	**R**
SUZUKI			
INAZUMA	250	2012-2014	**R**
GLADIUS	650	2009-2014	**R**
GLADIUS ABS	650	2009-2014	**R**

Le immagini hanno il solo scopo di presentare i prodotti.
The images used are aimed at presenting the products only.

FL > pastiglia anteriore sinistra / front left pad
FR > pastiglia anteriore destra / front right pad
R > pastiglia posteriore / rear pad

957

CM56
- Sinterizzata stradale post. uso sportivo
- Rear sintered pad

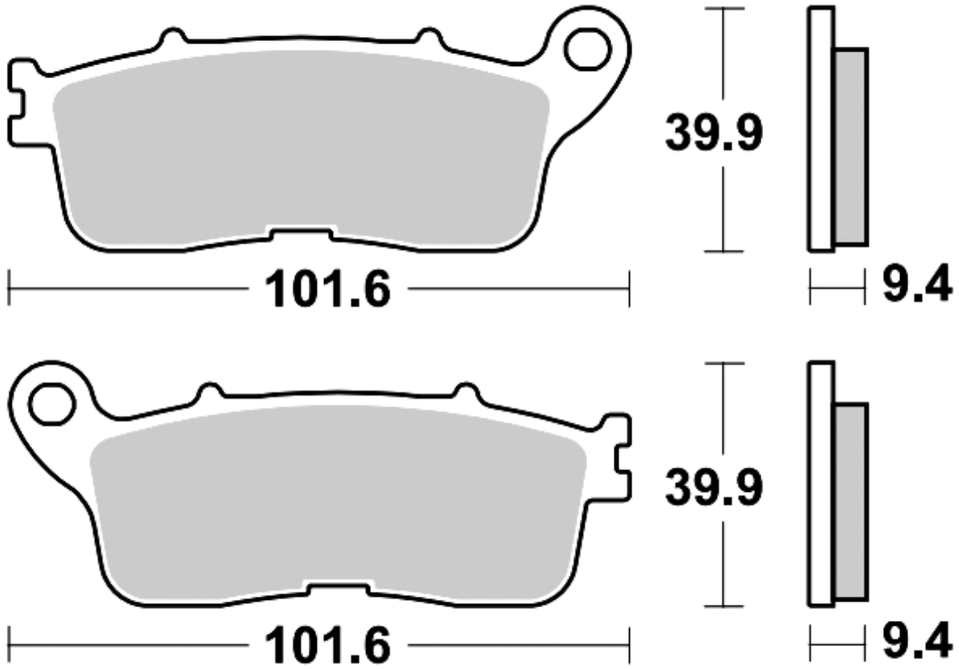

MODELLO MODEL	CC	ANNO YEAR	POSIZIONE POSITION
HONDA			
CROSSTOURER	1200	2012-2013	**R**
VFR F DCT	1200	2010-2014	**R**

958

SM1
- Semimetallica polivalente
- Semi-metallic pad

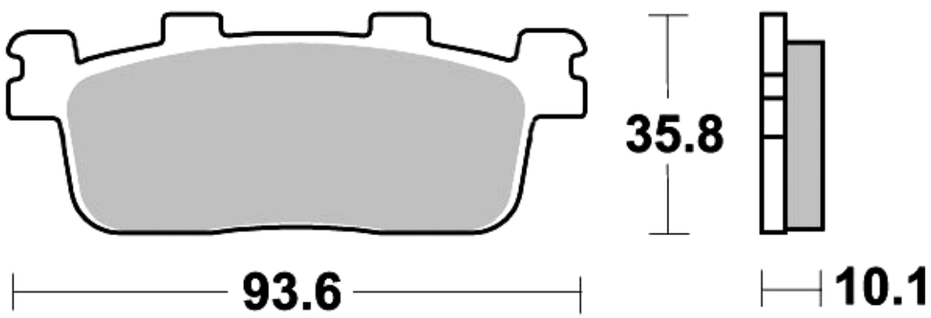

MODELLO MODEL	CC	ANNO YEAR	POSIZIONE POSITION
KAWASAKI			
J300	300	2014	**R**
J300 ABS	300	2014	**R**
J300 ABS SPECIAL EDITION	300	2014	**R**
J300 SPECIAL EDITION	300	2014	**R**
KYMCO			
PEOPLE S DD	125	2007-2014	**R**
PEOPLE GTI	200	2010-2014	**R**

MODELLO MODEL	CC	ANNO YEAR	POSIZIONE POSITION
PEOPLE S	200	2007-2014	**R**
PEOPLE S	250	2006-2009	**R**
XCITING	250	2004-2008	**R**
K-XCT i	300	2012-2013	**R**
K-XCT i ABS	300	2014	**R**
PEOPLE GTI ABS	300	2013-2014	**R**
XCITING R	300	2009-2011	**R**
XCITING Ri	300	2008-2014	**R**

959

CM66
- Semimetallica uso racing
- Semi-metallic pad racing use only

CM55
- Sinterizzata stradale ant. uso sportivo
- Front sintered pad

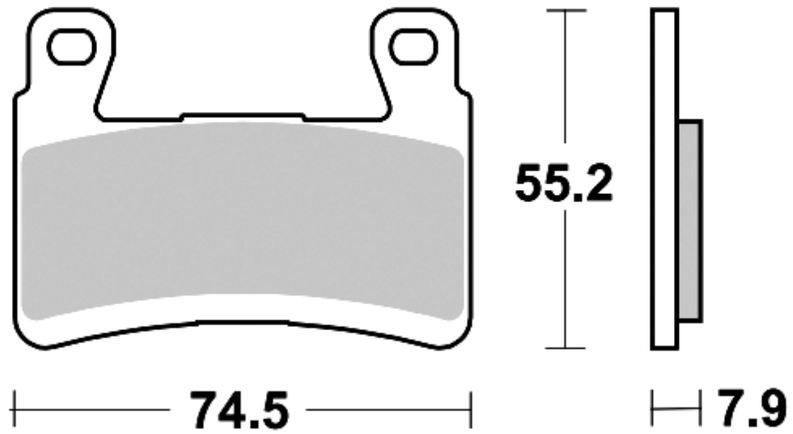

MODELLO MODEL	CC	ANNO YEAR	POSIZIONE POSITION
KAWASAKI			
ZX6R NINJA	636	2013-2015	**FL/FR**
ZX6R NINJA ABS	636	2013-2015	**FL/FR**

960

CM55
- Sinterizzata stradale ant. uso sportivo
- Front sintered pad

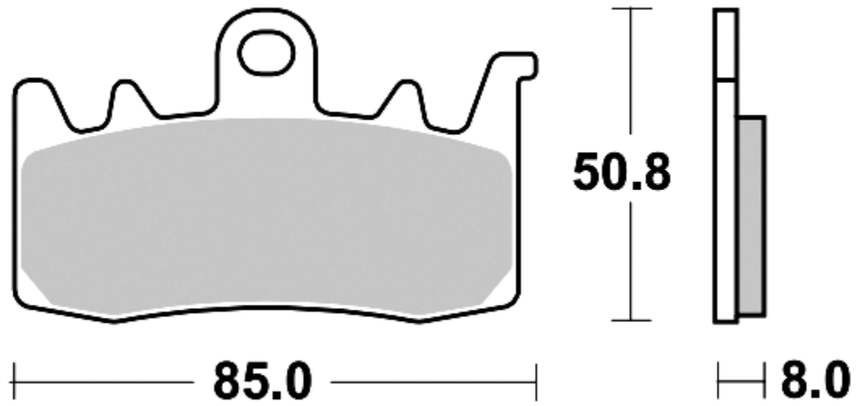

MODELLO MODEL	CC	ANNO YEAR	POSIZIONE POSITION
APRILIA			
TUONO V4 R APRC ABS	1000	2014	**FL/FR**
CAPONORD	1200	2013-2014	**FL/FR**
BMW			
R 1200 GS	1200	2013-2014	**FL/FR**
R 1200 GS - ABS	1200	2013-2014	**FL/FR**
R 1200 GS ADVENTURE	1200	2014	**FL/FR**
R 1200 RT	1200	2014	**FL/FR**
R NINE T	1200	2014	**FL/FR**

MODELLO MODEL	CC	ANNO YEAR	POSIZIONE POSITION
DUCATI			
HYPERMOTARD	820	2013-2014	**FL/FR**
HYPERMOTARD SP	820	2013-2014	**FL/FR**
HYPERSTRADA	820	2013-2014	**FL/FR**
PANIGALE 899	898	2014	**FL/FR**
MONSTER	1200	2014	**FL/FR**
MV AGUSTA			
RIVALE	800	2013-2014	**FL/FR**

Le immagini hanno il solo scopo di presentare i prodotti.
The images used are aimed at presenting the products only.

FL > pastiglia anteriore sinistra / front left pad
FR > pastiglia anteriore destra / front right pad
R > pastiglia posteriore / rear pad

961

SM1
- Semimetallica polivalente
- Semi-metallic pad

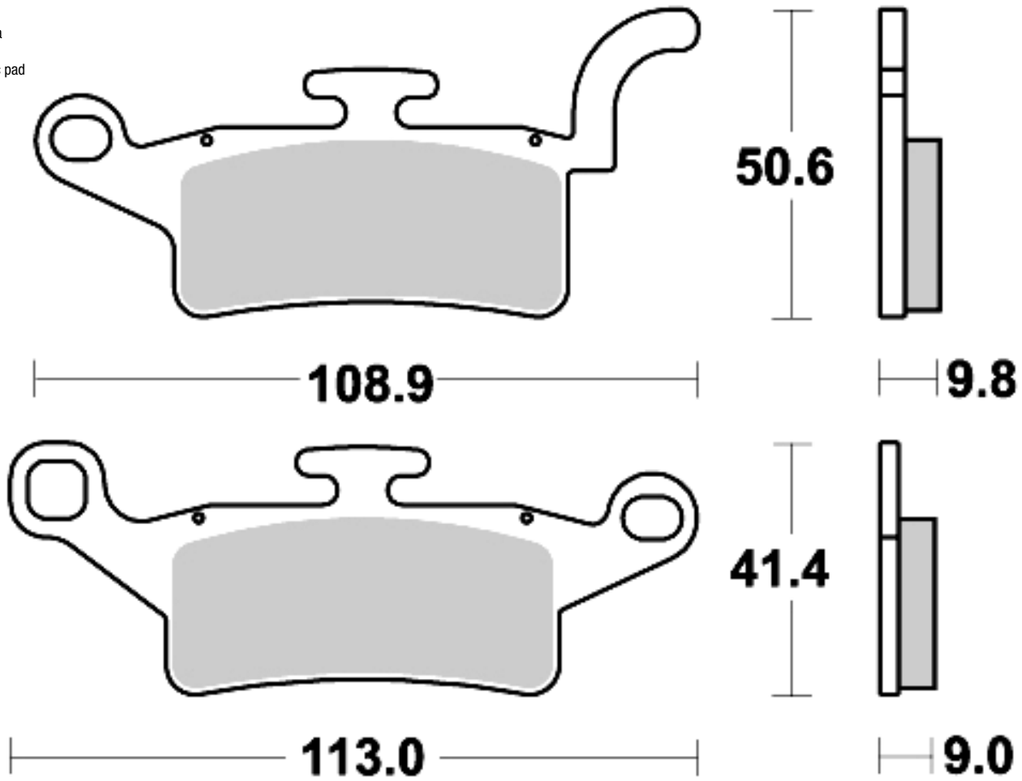

MODELLO MODEL	CC	ANNO YEAR	POSIZIONE POSITION
MBK			
YW Z (Rear Drum Model)	125	2010	**FL**

MODELLO MODEL	CC	ANNO YEAR	POSIZIONE POSITION
YAMAHA			
BWS (Rear Drum Model)	125	2010-2011	**FL**
XENTER (Rear Drum Model)	125	2012-2014	**FL**
XENTER (Rear Drum Model)	150	2012-2013	**FL**

962

CM56
- Sinterizzata stradale post. uso sportivo
- Rear sintered pad

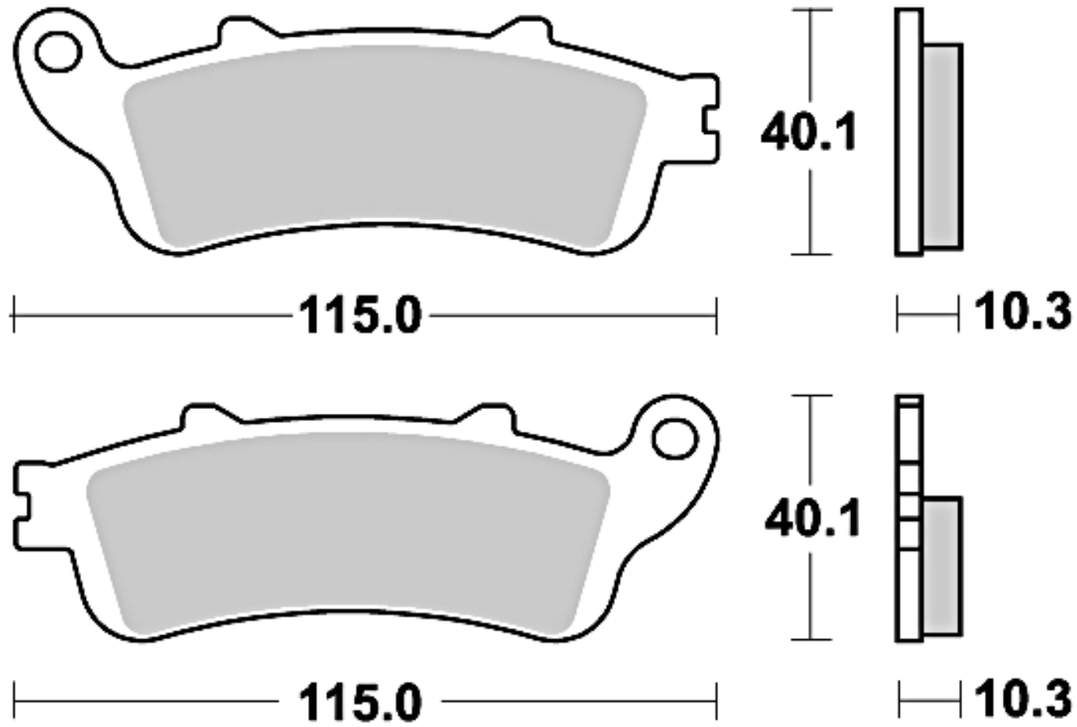

MODELLO MODEL	CC	ANNO YEAR	POSIZIONE POSITION
HONDA			
GL GOLD WING	1800	2001-2014	**R**
GOLD WING F6B	1800	2013-2014	**R**
GOLD WING F6C	1800	2014	**R**

Le immagini hanno il solo scopo di presentare i prodotti.
The images used are aimed at presenting the products only.

FL > pastiglia anteriore sinistra / front left pad
FR > pastiglia anteriore destra / front right pad
R > pastiglia posteriore / rear pad

963

SM1
- Semimetallica polivalente
- Semi-metallic pad

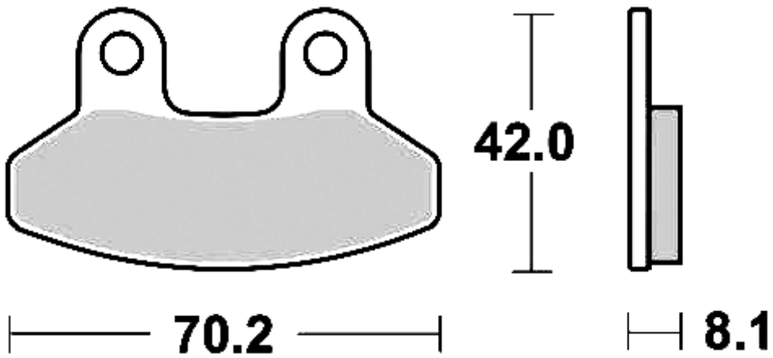

MODELLO MODEL	CC	ANNO YEAR	POSIZIONE POSITION
SYM			
JOYRIDE EVO	200	2009-2013	**FL**

964

CM55
- Sinterizzata stradale ant. uso sportivo
- Front sintered pad

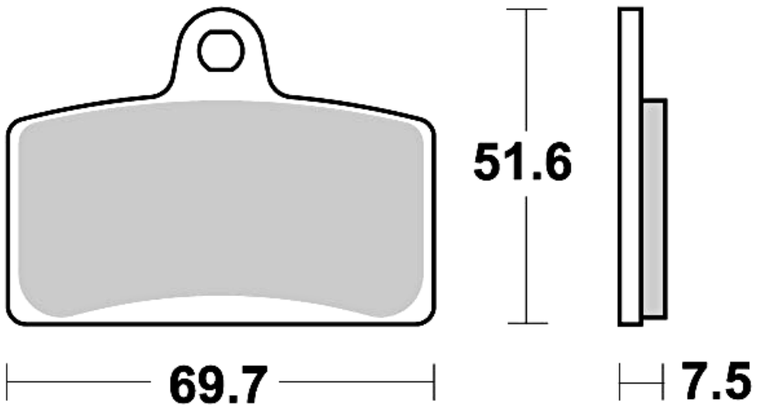

MODELLO MODEL	CC	ANNO YEAR	POSIZIONE POSITION
APRILIA			
RS4 (AJP Rear Caliper)	50	2011-2014	**FL**
RS4 (J.Juan Rear Caliper)	50	2011-2014	**FL**
RS4 (AJP Rear Caliper)	125	2011-2013	**FL**
RS4 (J.Juan Rear Caliper)	125	2011-2014	**FL**

MODELLO MODEL	CC	ANNO YEAR	POSIZIONE POSITION
DERBI			
GPR Nude	125	2005-2008	**FL**
GPR RACING	125	2004-2008	**FL**

965

SM1
- Semimetallica polivalente
- Semi-metallic pad

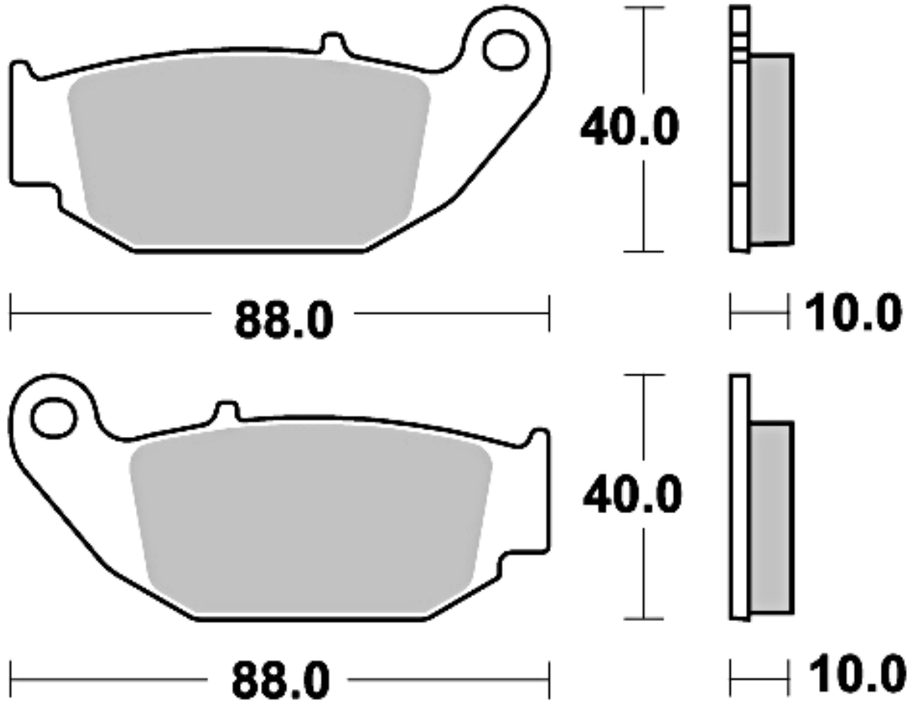

MODELLO MODEL	CC	ANNO YEAR	POSIZIONE POSITION
HONDA			
CBR R	125	2012-2014	**R**
MSX (GROM)	125	2013-2014	**R**
CRF L	250	2013-2014	**R**
CRF M	250	2013	**R**

REPLACEMENT PADS FOR BRAKING CALIPERS / PASTIGLIE DI RICAMBIO PER PINZE BRAKING

701

Pad for Braking off-road one piston calipers.
Pastiglia per pinze Braking off-road monopistone.
CA1401 - CA1402 - CA1404 - CA407

Dimension/Dimensioni: 74,9 x 36,1 x 9,5
COMPOUND/MESCOLE:
- **SM1** (semimetallic universal use / semimetallica polivalente)
- **CM44** (sintered for off-road and wet conditions / sinterizzata off-road uso sportivo e bagnato)
- **CM46** (sintered for racinf off-road / sinterizzata off-road uso racing)

776

Pad for Braking radial calipers.
Pastiglia per pinze radiali Braking.

Dimension/Dimensioni: 77,6 x 41 x 8,5
COMPOUND/MESCOLE:
- **CM55** (sintered for sport use / sinterizzata stradale uso sportivo)
- **CM66** (semimetallic for racing / semimetallica uso racing)
- **P1** (extreme syntered racing for long time races / sinterizzata racing estrema per lunghe durate)

834

Pads for Kit BRR from BRR01 to BRR19 (3 spoke wheel).
Pastiglia per Kit BRR dal modello BRR01 al BRR19 (ruota 3 razze).

Dimension/Dimensioni: 68,0 x 41,0 x 8,5
COMPOUND/MESCOLE:
- **CM55** (sintered for sport use / sinterizzata stradale uso sportivo)

769

Pad for Braking C20213 caliper (rear GP Racing).
Pastiglia per pinza Braking C20213 (posteriore GP Racing).

Dimension/Dimensioni:
COMPOUND/MESCOLE:
- **SM1** (semimetallic universal use / semimetallica polivalente)

784

Pad for Braking Supermotard 4 piston calipers.
Pastiglia per pinze Braking Supermotard 4 pistoni.

Dimension/Dimensioni: 75,0 x 55,0 x 8,7
COMPOUND/MESCOLE:
- **SM1** (semimetallic universal use / semimetallica polivalente)
- **CM55** (sintered for sport use / sinterizzata stradale uso sportivo)
- **CM66** (semimetallic for racing / semimetallica uso racing)

835

Pad for BRR kit caliper from BRR20 on (5 spoke wheel).
Pastiglia per kit BRR dal modello BRR20 in poi (ruota 5 razze).

Dimension/Dimensioni: 84,5 x 37,0 x 8,2
COMPOUND/MESCOLE:
- **CM55** (sintered for sport use / sinterizzata stradale uso sportivo)

772

Pad for front Braking off-road calipers
CA2401 - CA2402 - C21421
Pastiglia per pinze Braking off-road anteriori
CA2401 - CA2402 - C21421

Dimension/Dimensioni: 94,0 x 34,0 x 7,0
COMPOUND/MESCOLE:
- **SM1** (semimetallic universal use / semimetallica polivalente)
- **CM44** (sintered for off-road and wet conditions / sinterizzata off-road uso sportivo e bagnato)
- **CM46** (sinterizzata off-road uso racing / sintered for racinf off-road)

813

Pad for CA2501 - C21521 caliper.
Pastiglia per pinza CA2501 - C21521

Dimension/Dimensioni: 115,0 x 41,1 x 7,5
COMPOUND/MESCOLE:
- **SM1** (semimetallic universal use / semimetallica polivalente)
- **CM55** (sintered for sport use / sinterizzata stradale uso sportivo)
- **CM66** (semimetallic for racing / semimetallica uso racing)

841

Pad for Braking Harley-Davidson calipers.
Pastiglia per pinze Braking Harley-Davidson.

Dimension/Dimensioni: 92,0 x 51,5 x 8,5
COMPOUND/MESCOLE:
- **SM1** (semimetallic universal use / semimetallica polivalente)

773

Pad for Braking off-road one piston calipers
CA1405
Pastiglia per pinze Braking off-road monopistone
CA1405

Dimension/Dimensioni: 78,0 x 41,5 x 9,0
COMPOUND/MESCOLE:
- **SM1** (semimetallic universal use / semimetallica polivalente)
- **CM44** (sintered for off-road and wet conditions / sinterizzata off-road uso sportivo e bagnato)
- **CM46** (sintered for racinf off-road / sinterizzata off-road uso racing)

Tabella comparativa / Cross reference

BRAKING	SBS	EBC	FERODO	DP PAD	FRENOTECNICA	BREMBO	GALFER	GOLDFREN	LUCAS	NEWFREN	GRIMECA	CL
612	519	FA047	FDB207	DP601	FT 3029	072686..	12	38\83\87	MCB75	FD001		2249/1167
613	506	FA18				72256	13	81	MCB19	FD0013		2332
616	517	FA031	FDB182	DP101		07.H003.07	16	78\79	MCB54	FD0016		2814
617	507	FA034	FDB117R	DP401		07.YA03.09	17	82	MCB68	FD0017		2847
619	513	FA24/2	FDB185R	DP906		07.HD01.05	60	HD	MCB97	FD0151		2599
621	559	FA115	FRP405	DP607	FT 3015	73132	65	121	MCB535	FD0142	PR1024	2377
622	512	FA036	FDB151R	DP203		07.KS02.07	22	75	MCB73	FD0022		
633	537	FA071	FDB333	DP907		07.HD02.02	58	59HD	MCB511	FD0153		2700
644	554	FA077	FDB204	DP620		73462	44		MCB533	FD0044		2840
645	526	FA045	FDB183	DP103	FT 3052 mm10,8	07.H007.12	45	16	MCB55	FD0045		
646	533	FA051	FDB218	DP205		07.SU03.12	46	75	MCB509	FD0046		2694
647	534	FA065	FDB217	DP206		07.SU04.12	47		MCB501	FD0047		
648	574	FA060	FDB694	DP611		73937	48	96	MCB552	FD0048		1089
651	547	FA070	FDB277	DP402		07.YA08.09	51		MCB521	FD0051		2807
652	540	FA068	FDB298	DP308		07.KA06.08	52		MCB516	FD0053		
653	722	FA281	FDB2075	DP124	FT 3023							2602
654	542	FA049/3				07.H010.10	54	12\49	MCB512	FD0054		2289
656	552	FA080	FDB310	DP106		07.H014.06	60		MCB526	FD0063		
658	550	FA081	FDB311	DP403		07.YA10.11	56		MCB524	FD0062		2802
661	555	FA088	FDB337	DP404	FT 3053	07.YA11.07	57	15	MCB530	FD0068		2283
662	557	FA085	FDB339	DP311	FT 3061	07.KA08.08	62	37	MCB532	FD0072		2285
664	543	FA072	FDB334	DP908		07.HD03.03		62HD	MCB518	FD0154		2718
666	553	FA079				07.HD05.07	61	61HD		FD0156		2702
667	558	FA092	FDB382	DP812	FT 3034 mm 7,3	07.HD05.07	63	61HD	MCB528	FD0156		2451
668	549	FA078	FDB335	DP901		07.H015.05	64		MCB534	FD0067		2701
669	546	FA067	FDB314	DP310	FT 3095	07.KS04.32	75	5\84\86	MCB523	FD0073		2306
671	595	FA099	FDB436	DP602	FT 3013	07.GR05.01	071	120	MCB564	FD0074		3034
673	551	FA086	FDB312	DP111		07.GR11.01	73	11	MCB525	FD0049		2621
679	570	FA104	FDB386	DP407		07.YA12.07	69	67		FD0082		2301
680	577	FA103		DP210								
681	582	FA106/2	FDB673	DP405		07.SU08.08	70	30\46	MCB550	FD0095		2386
683	596	FA118	FDB583			07.YA18.09	72	29	MCB568	FD0097		2393
684	588	FA256	FDB438	DP108	FT 3026	07.GR03.05	74	10	MCB557	FD0091		2794
685	575	FA101	FDB383	DP406	FT 3085	07.YA14.07	79	18	MCB539	FD0124		2284
686	562	FA084			FT 3106	07.H020.06	76	7\77	MCB561	FD0078		2328
687	580	FA105	FDB411	DP405		07.YA13.05	80	43	MCB549	FD0089		2792
688	566	FA095	FR408	DP614	FT 3030	74426	68	64	MCB540	FD0093		2247
689	587	FA110	FDB437			07,YA12.07	81	67	MCB541	FD0100		
690	600	FA124/2	FDB663	DP116		07.H023.07	82	24-51	MCB571	FD0105		2310
691	578	FA102	FDB390			07.SU07.07	83		MCB547	FD0119		
692	590	FA123	FDB662	DP409		07.YA17.11	87	73	MCB559	FD0104		2305
694	607	FA116	FDB697	DP610	FT 3012	07.GR06.01	84	115	MCB578	FD0098		2260
696	611	FA135	FDB497	DP411	FT 3063	07.SU12.15	86	2	MCB582	FD0122		2288
697	608	FA134	FDB499	DP605		7471210	89	6	MCB579	FD0113		2400
698	597	FA129	FDB481	DP314		07.KA09.33	90	13	MCB569	FD0108		2304
699	602	FA130	FDB494	DP313		07.KA10.16	91	35	MCB573	FD0116		
700	603	FA125	FDB495	DP814		07.H025.06	92	4	MCB574	FD0120		2302
701	604	FA131/3	FDB539	DP621	FT 3087	07.H026.08	93	3	MCB575	FD0114		2314
702	544	FA083/2	FDB313	DP312	FT 3075	07.H011.18	94	42\47	MCB522	FD0085		2469
703	536	FA054	FDB250	DP107	FT 3083	07.H009.06	95	144	MCB510	FD0080		2408
704	593	FA121	FDB462	DP110		07.H021.07	96	25	MCB562	FD0106		2252
705	589	FA119	FDB453	DP408		07.YA16.05	97	34		FD0102		2424
706	594	FA120	FDB592			7460610	98	101	MCB563	FD0096		2801
707	624	FA236	FDB557	DP213		07.SU14.07	99	17	MCB595	FD0129		2246
709	626	FA147	FDB606	DP214		07.SU15.09	101	36	MCB597	FD0140		2308
710	636	FA164		DP609		07.BE01.05	102			FD0159		
711	614	FA140	FDB531	DP115	FT 3073	07.H027.11	103	20	MCB585	FD0136		2298
712	615	FA141	FDB508	DP204		07.KA11.17	104	44	MCB586	FD0138		2389
715	631	FA158	FDB574	DP317	FT 3062	07.KA13.06	107	32	MCB602	FD0144		2251
716	627	FA142	FDB570	DP117	FT 3059	07.H030.05	108	14	MCB624	FD0132		2256
717	620	FA146	FDB569	DP212		07.SU13.06	109	27	MCB591	FD0147		2281
718	623	FA143	FDB496	DP113		07.H029.11	110	52	MCB594	FD0141		2385
719	556	FA063	FDB338	DP207	FT 3052	07.KS05.07	111	16	MCB531	FD0060		2282
720	700	FA196	FDB664	DP118	FT 3071	07.H031.09	112	14	MCB599	FD0130		2313
721	618	FA151	FDB2192	DP119		07.H037.07	113			FD0139		2287
722	632	FA152	FDB659	DP315	FT 3086	07.KA12.07		100	MCB625	FD0144		2299
723	629											
725	638	FA165	FDB631	DP412	FT 3064	07.YA20.08	117	9\88	MCB604	FD0163		2326
726	601	FA126	FDB498	DP604	FT 3031	07.GRKT.03	118		MCB572	FD0115		2398
727	641	FA163	FDB529	DP618		7488210	119	89	MCB618	FD0158		2400
728	635	FA157	FDB607	DP215		07.SU17.18	120	65	MCB612	FD0164		2388
729	645	FA160	FDB666	DP410		07.YA24.09	121	28	MCB622	FD0191		2311
732	579	FA097				07.HD06.14	124	57HD	MCB548	FD0157		2699
733	668	FA201	FDB485	DP904		07.HD09.10	125	63		FD0149		2342
734	669	FA200	FDB521	DP905		07.HD07.10	126	56HD		FD0150		2370
735	616	FA136	FDB591	DP417		07.YA19.09	127			FD0135		2392
736	621	FA132	FDB561	DP606		07.KT02.07	128	26	MCB592	FD0126		2399

Tabella comparativa / Cross reference

BRAKING	SBS	EBC	FERODO	DP PAD	FRENOTECNICA	BREMBO	GALFER	GOLDFREN	LUCAS	NEWFREN	GRIMECA	CL
737	650	FA172	FDB737	DP413		07.YA25.08	129	33	MCB627	FD0167		2360
738	598	FA122				07.HO24.08	130		MCB570	FD0109		
739	644	FA170				07.BM04.07	131	117		FD0168		2430
740	681	FA177	FDB782	DP615		07.GR21.06	132	105	MCB652	FD0171		
741	652	FA167	FDB706	DP613	FT 3055	07.HO13.04	133	95	MCB629	FD0162		1144
742	657	FA174	FDB754	DP121	FT 3072	07.HO36.07	134	21	MCB634	FD0172		2296
743	684	FA173	FDB828	DP310		07.GR04.16	135	94	MCB523	FD0165		2472
744	619	FA169	FDB636		FT 3076	07.YA30.06	136	114	MCB590	FD0175		2696
745	640	FA171	FDB736	DP608		174313889	137	72	MCB617	FD0169		2258
746	671	FA181	FDB2018	DP617	FT 3027	75269.1	138	31	MCB648	FD0229		2352
748	181	FA196	DP118									
749	666	FA180	FDB741	DP319		07.KA14.06	141	90	MCB643	FD0185		2363
750	663	FA179	FDB781	DP414	FT 3057	07.HO23.07	142	48	MCB640	FD0184		2391
751	665	FA182	FDB637	DP415		07.YA24.09	143	45	MCB642	FD0176		2309
755	673	FA131/2				07.GR18.06	147	71	MCB665	FD0178		3006
756	622	FA187	FDB858	DP112		07.HO28.07	148	69	MCB593	FD0198		2245
757	670	FA257				07.HO38.07	149	110	MCB647	FD0173		2408
758	647	FA124/2					150			FD0105		2248
759	672	FA156	FDB886			07.GR17.05	151	66		FD0125		2601
760	680	FA186	FDB784		FT 3025							2260
761	697	FA193		DP633	FT 3010	7536530	153	98	MCB696	FD0196		2307
762	682	FA191	FDB865			07.YA31.08	154		MCB655	FD0200		2362
763	685	FA189	FDB2002	DP122		07.HO39.07	155	55	MCB658	FD0203		2257
764	686	FA188	FDB873	DP216	FT 3060	07.SU19.07	156	39	MCB659	FD0199		2255
765	683	FA190	FDB864	DP416		07.YA32.08	157	54	MCB656	FD0201		2254
768	656	FA175	FRP415									
770	689	FA194	FDB677		FT 3017	07.GR19.06	162	122	MCB664	FD0195	PR1113	1146
771	659	FA162	FDB2194			07.YA28.RR	163					2269
772	694	FA185	FDB892	DP321	FT 3050	07.KA17.05	164	41	MCB574	FD0193		2300
773	675	FA208	FDB2019	DP622	FT 3088	75552.1	165	23	MCB672	FD0206		2353
774	710	FA234		DP014		07.GR25.08	166		MCB686			3041
775	687	FA192	FDB2012R	DP320	FT 3089							2381
776	695	FA218	FDB2007	DP626			168	116		FD0213		2329
777	691	FA199	FDB2003	DP421	FT 3019		169	99	MCB666	FD0205		2546
778	744	FA206			FT 3067	75365.3	170	38	MCB644	FD0197		3013
779	667	FA193		DP633/DP680	FT 3011							2307
780	674	FA209/2	FDB2006	DP623	FT 3090	75270.11	172	106	MCB671	FD0216		2396
782	705	FA229	FDB2048	DP322	FT 3092	07.KA19.07	174	104	MCB682	FD0228		2383
783	723	FA235	FDB2191			07.GR27.08	175		MCB694			3047
784	706	FA244	FDB2042	DP630	FT 3093	07.YA36.07	176		MCB683	FD0221		2539
785	702	FA230		DP218			177	109	MCB679			2914
786	634	FA252	FDB605	DP418	FT 3094		178	70		FD0190		2361
787	704	FA231	FDB2049	DP323	FT 3091	07.KA18.07	179	124	MCB681	FD0227		2384
794	742	FA363	FDB2039		FT 3084	07BB03	186		MCB707	FD0229		2900
795	713	FA228	FDB497	DP211	FT 3070	07.HO44.08	187		MCB689	FD0163		2288/3087
796	708	FA264			FT 3099							3039
797	701	FA222	FDB2058	DP217		07.SU20.07	189	129	MCB678	FD0060		2390
801	676	FA424				07.KA20.09	193	126	MCB660	FD0246		2899
803	793	FA256			FT 3051		195		MCB673	FD0238		
805	712	FA255	FDB2037			07.GR26.05	197	117		FD0225		3043
806	703	FA407	FDB2050	DP625		07.BM06.07	198		MCB680	FD0237		2430
808	724	FA260	FDB2057	DP635	FT 3014	07.GR28.05	200			FD0247		3043
812	726	FA258		DP326		07.KA22.SD	204	108				2750
813	735	FA261	FDB2073	DP125	FT 3023 mm 8.3	07.HO42.06	205	135	MCB704	FD0254		2602/2923
814	731	FA268	FDB2062	DP013	FT 3016							3027
817	581	FA106	FDB404	DP405			209			FD0092		2387
822	728	FA275	FDB2083	DP420	FT 3022		174					2828
826	733	FA267	FDB2084	DP419		07.YA23.08	218			FD0261		2713
827	734	FA296HH	FDB2079	DP127		07.HO45.07	219			FD0258		2711
828	730	FA266	FDB2074	DP631	FT 3035		220			FD0256		2827
830	740	FA423		DP965	FT 3018 (4 PZ)	07.HO15.05	222					1175
831	802	FA303		DP937								
832	803	FA351	FDB2127		FT 3042							
836	746	FA304	FDB2102	DP637			226					2987
840	747	FA298	FDB2090		FT 3020							3055
842	748	FA301	FDB2095		FT 3028							3064
843	750											2958
853	761	FA324	FDB2105		FT 3096							3056
856	717	FA232	FDB2054	DP909								2961
857	642	FA159	FDB2055	DP902								2927
860	755	FA270	FDB2121	DP915								2925
862	754	FA307	FDB2148	DP327								2923
867	784	FA343	FDB2143	DP129								1067
868	768	FA319	FDB2126	DP423	FT 3058							3061
869	749	FA305	FDB2096		FT 3049							1123
870	762	FA322/4HH	FDB2120	DP638	FT 3107 (4 PZ)							1033

Tabella comparativa / Cross reference

BRAKING	SBS	EBC	FERODO	DP PAD	FRENOTECNICA	BREMBO	GALFER	GOLDFREN	LUCAS	NEWFREN	GRIMECA	CL
871	772	FA321		DP327	FT 3024							3054
873	783	FA357	FDB2157	DP924								1078
875	765	FA254	FDB211	DP220								2813
878	773	FA350	FDB2128		FT 3048							1223
879	778	FA294HH	FDB2124	DP639								2960
883	775	FA355			FT 3037 (4 PZ)							1151
884	776	FA356			FT 3036							3071
885	780	FA374	FDB2147		FT 3043							3081
886	777	FA346	FDB2139	DP921	FT 3046							1076
887	174	FA411		DP966								
888	177	FA353			FT 3041							3060
890	790	FA367	FDB2162	DP940	FT 3101 mm 9.3							1103
891	791	FA368	FDB2165	DP935	FT 3056							1108
892	796	FA335HH	FDB2125	DP641								1101
893	788	FA369	FDB2164	DP942								1110
894	752	FA302	FDB2110	DP328								1034
895	795	FA345HH	FDB2145	DP926								1139
896	804	FA412	FDB2173	DP968	FT 3104							3066
897	794	FA325TT	FDB2183	DP923	FT 3032							1128
898	806	FA379	FDB2178	DP947								1133
899	809	FA390	FDB2181	DP950								1134
900	807	FA381	FDB2179	DP948								1149
901	808	FA387	FDB2180	DP949								1150
902	797	FA375	FDB2169									1148
903	769	FA319/2	FDB2156	DP423	FT 3058 mm 9.5							1084
904	812	FA408	FDB2200		FT 3078							3075
905	820	FA401	FDB2197	DP953								1152
906	782	FA347HH	FDB2158	DP922								1083
907	763	FA320HH	FDB2198	DP958								1203
908	832	FA415			FT 3082							3083
909	831	FA425			FT 3079							3084
910	828	FA388	FDB2196	DP954	FT 3081							1159
911	813	FA373	FDB2182	DP944								1140
923	810	FA377	FDB2184	DP967								1147
924	833	FA419		DP963								1163
925	834	FA436	FDB2221	DP973								1174
926	837	FA430	FDB2208	DP995	FT 3080							3085
927	838	FA417	FDB2220	DP964								1177
928	839	FA442	FDB2217	DP977								1180
929	840	FA450	FDB2219	DP983								1183
930	841	FA447HH	FDB2218	DP978		07.9882.10						1185
931	842	FA405										
932	843	FA433										1129
933	844	FA432	FDB2216		FT 3098							1187
934	830	FA409HH		DP962								1172
935	835	FA413		DP920								2923
936	836	FA414		DP919								1102
937	805	FA435										1075
938	857	FA460HH										
939	856	FA454	FDB2240									
940	709	FA092	FDB382	DP114								1164
941	864	FA491										1209
942	862	FA488HH										1217
943	853	FA457HH	FDB2250	DP986								1212
944	854	FA458HH	FDB2251	DP987								1213
945	204	FA498										3094
947	870	FA604										1207
948	195	FA607			FT 3100							3089
949	872	FA602TT										1219
950	869	FA499										1216
951	846	FA434		DP971								1211
952	877	FA606										
953	187	FA418			FT 3097							3077
954	205	FA603					FD439					
955	885	FA612										
956	881	FA496										
957	892	FA636										
958	195	FA607										3089
959	894											
960	900	FA630				07BB38						
961	208	FA492										3098
962	880	FA261/2HH										
963	792	SFA308										
964	821	FA399	FDB2201			07GR72						
965	915											

SUPPORTI PINZA - CALIPER BRACKETS

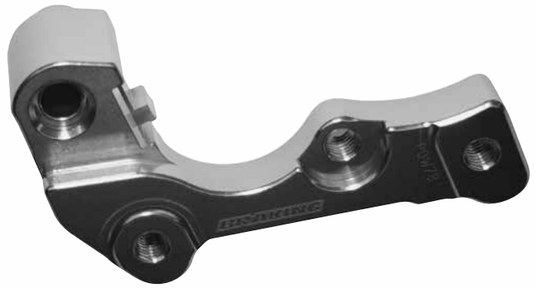

MARCA BRAND	MODELLO MODEL	CC	ANNO YEAR	POSIZIONE POSITION	Ø DISCO Ø DISK	PINZA CALIPER
			POW02			
HONDA	**CR E**	125	1994 - 2003	**F**	Ø260	OEM
HONDA	**CR R**	125	1994 - 2003	**F**	Ø260	OEM
HONDA	**CR E**	250	1994 - 2003	**F**	Ø260	OEM
HONDA	**CR R**	250	1994 - 2003	**F**	Ø260	OEM
HONDA	**XR R**	250	1991 - 2004	**F**	Ø260	OEM
HONDA	**XR R**	400	1995 - 2005	**F**	Ø260	OEM
HONDA	**CRF R**	450	2002 - 2003	**F**	Ø260	OEM
HONDA	**CR E**	500	1994 - 2001	**F**	Ø260	OEM
HONDA	**CR R**	500	1994	**F**	Ø260	OEM
HONDA	**CR R**	500	1995 - 2001	**F**	Ø260	OEM
HONDA	**XR R**	600	1994 - 2000	**F**	Ø260	OEM
HONDA	**XR R**	650	2000 - 2008	**F**	Ø260	OEM
KAWASAKI	**KX**	125	1995 - 2008	**F**	Ø270	OEM
KAWASAKI	**KLX R**	250	1993 - 1996	**F**	Ø270	OEM
KAWASAKI	**KX**	250	1994 - 2008	**F**	Ø270	OEM
KAWASAKI	**KX F**	250	2004 - 2013	**F**	Ø270	OEM
KAWASAKI	**KX F**	250	2014 - 2015	**F**	Ø270	OEM
KAWASAKI	**KLX R**	300	1997 - 2007	**F**	Ø270	OEM
KAWASAKI	**KLX R**	450	2007 - 2014	**F**	Ø270	OEM
KAWASAKI	**KX F**	450	2006 - 2015	**F**	Ø270	OEM
KAWASAKI	**KX**	500	1994 - 2004	**F**	Ø270	OEM
SUZUKI	**RM**	125	1996 - 2009	**F**	Ø270	OEM
SUZUKI	**RM**	250	1996 - 2012	**F**	Ø270	OEM
SUZUKI	**RMZ**	250	2004 - 2015	**F**	Ø270	OEM
SUZUKI	**DRZ E**	400	2000 - 2008	**F**	Ø270	OEM
SUZUKI	**DRZ S**	400	2000 - 2005	**F**	Ø270	OEM
SUZUKI	**DRZ S**	400	2006 - 2009	**F**	Ø270	OEM
SUZUKI	**RMX**	450	2010 - 2012	**F**	Ø270	OEM
SUZUKI	**RMZ**	450	2005 - 2015	**F**	Ø270	OEM
			POW04			
YAMAHA	**WR**	125	1998 - 2007	**F**	Ø270	OEM
YAMAHA	**YZ**	125	1998 - 2007	**F**	Ø270	OEM
YAMAHA	**WR**	250	1998 - 2001	**F**	Ø270	OEM
YAMAHA	**WR**	250	2003 - 2007	**F**	Ø270	OEM
YAMAHA	**WR F**	250	2001 - 2013	**F**	Ø270	OEM
YAMAHA	**YZ**	250	1998 - 2007	**F**	Ø270	OEM
YAMAHA	**YZ F**	250	2001 - 2006	**F**	Ø270	OEM
YAMAHA	**WR F**	400	1998 - 2000	**F**	Ø270	OEM
YAMAHA	**YZ F**	400	1998 - 2000	**F**	Ø270	OEM
YAMAHA	**WR F**	426	2001 - 2002	**F**	Ø270	OEM
YAMAHA	**YZ F**	426	2000 - 2002	**F**	Ø270	OEM
YAMAHA	**WR F**	450	2003 - 2014	**F**	Ø270	OEM
YAMAHA	**YZ F**	450	2003 - 2007	**F**	Ø270	OEM
			POW13			
YAMAHA	**WR**	125	1998 - 2000	**F**	Ø260	OEM
YAMAHA	**WR**	125	2001 - 2007	**F**	Ø260	OEM
YAMAHA	**YZ**	125	1998 - 2007	**F**	Ø260	OEM
YAMAHA	**WR**	250	1998 - 2001	**F**	Ø260	OEM
YAMAHA	**WR**	250	2003 - 2007	**F**	Ø260	OEM
YAMAHA	**WR F**	250	2001 - 2013	**F**	Ø260	OEM
YAMAHA	**YZ**	250	1998 - 2007	**F**	Ø260	OEM
YAMAHA	**YZ F**	250	2001 - 2006	**F**	Ø260	OEM
YAMAHA	**WR F**	400	1998 - 2000	**F**	Ø260	OEM
YAMAHA	**YZ F**	400	1998 - 2000	**F**	Ø260	OEM
YAMAHA	**WR F**	426	2001 - 2002	**F**	Ø260	OEM
YAMAHA	**YZ F**	426	2000 - 2002	**F**	Ø260	OEM
YAMAHA	**WR F**	450	2003 - 2014	**F**	Ø260	OEM
YAMAHA	**YZ F**	450	2003 - 2007	**F**	Ø260	OEM
			POW17			
HONDA	**CR R**	80	1996 - 2002	**F**	Ø240	OEM
HONDA	**CR R**	85	2003 - 2007	**F**	Ø240	OEM
HONDA	**CRF R**	150	2007 - 2013	**F**	Ø240	OEM
HONDA	**CRF RB**	150	2007 - 2013	**F**	Ø240	OEM
			POW21			
HONDA	**CR E**	125	1995 - 2003	**F**	Ø320	OEM
HONDA	**CR R**	125	1995 - 2003	**F**	Ø320	OEM
HONDA	**CR E**	250	1995 - 2003	**F**	Ø320	OEM
HONDA	**CR R**	250	1995 - 2003	**F**	Ø320	OEM
HONDA	**XR R**	250	1991 - 2004	**F**	Ø320	OEM
HONDA	**XR R**	400	1995 - 2005	**F**	Ø320	OEM
HONDA	**XR SUPERMOTARD**	400	2000 - 2005	**F**	Ø320	OEM
HONDA	**CRF R**	450	2002 - 2003	**F**	Ø320	OEM
HONDA	**CR E**	500	1995 - 2001	**F**	Ø320	OEM
HONDA	**CR R**	500	1995 - 2001	**F**	Ø320	OEM
HONDA	**XR R**	600	1994 - 2000	**F**	Ø320	OEM
HONDA	**XR L**	650	1993 - 2012	**F**	Ø320	OEM
HONDA	**XR R**	650	2000 - 2008	**F**	Ø320	OEM
HONDA	**XR SUPERMOTARD**	650	2000 - 2008	**F**	Ø320	OEM
HONDA-HM	**CR E SUPERMOTARD**	125	2000 - 2003	**F**	Ø320	OEM
HONDA-HM	**CR E SUPERMOTARD**	250	2000 - 2003	**F**	Ø320	OEM
HONDA-HM	**CRF SUPERMOTARD**	450	2002 - 2003	**F**	Ø320	OEM
			POW44			
GILERA	**RUNNER FX**	125	2000 - 2005	**F**	Ø250	OEM
GILERA	**RUNNER FX SP (Grimeca)**	125	2002 - 2005	**F**	Ø250	OEM
GILERA	**RUNNER FXR SP 2t (Grimeca)**	180	1999 - 2005	**F**	Ø250	OEM
GILERA	**RUNNER VXR 4t (Grimeca)**	180	2001 - 2005	**F**	Ø250	OEM
			POW68			
BMW	**G 450 X**	450	2008 - 2011	**F**	Ø270	OEM
HUSABERG	**FE**	400	2000 - 2003	**F**	Ø270	OEM
HUSABERG	**FE E**	400	2001 - 2003	**F**	Ø270	OEM
HUSABERG	**FS C**	400	2001 - 2003	**F**	Ø270	OEM
HUSABERG	**FS E**	400	2001 - 2003	**F**	Ø270	OEM
HUSABERG	**FC**	470	2001 - 2002	**F**	Ø270	OEM
HUSABERG	**FC**	501	1999 - 2003	**F**	Ø270	OEM
HUSABERG	**FE E**	501	1999 - 2004	**F**	Ø270	OEM
HUSABERG	**FE S**	501	1999 - 2004	**F**	Ø270	OEM
HUSABERG	**FC**	550	2001 - 2005	**F**	Ø270	OEM
HUSABERG	**FE E**	550	2004 - 2008	**F**	Ø270	OEM
HUSABERG	**FC**	600	1999 - 2003	**F**	Ø270	OEM
HUSABERG	**FE E**	600	1999 - 2002	**F**	Ø270	OEM
HUSABERG	**FE E**	650	2001 - 2008	**F**	Ø270	OEM
HUSABERG	**FS C**	650	2001 - 2004	**F**	Ø270	OEM
HUSABERG	**FS E**	650	2001 - 2004	**F**	Ø270	OEM
HUSABERG	**FX E**	650	2001 - 2005	**F**	Ø270	OEM
HUSQVARNA	**CR**	125	2005 - 2006	**F**	Ø270	OEM
HUSQVARNA	**CR**	125	2011 - 2012	**F**	Ø270	OEM
HUSQVARNA	**TE**	125	2010 - 2013	**F**	Ø270	OEM
HUSQVARNA	**WR**	125	2006 - 2012	**F**	Ø270	OEM
HUSQVARNA	**CR**	250	2005 - 2011	**F**	Ø270	OEM
HUSQVARNA	**TC**	250	2007 - 2013	**F**	Ø270	OEM
HUSQVARNA	**TE**	250	2004 - 2010	**F**	Ø270	OEM
HUSQVARNA	**TXC**	250	2011	**F**	Ø270	OEM
HUSQVARNA	**WR**	250	2005 - 2013	**F**	Ø270	OEM
HUSQVARNA	**WR**	300	2009 - 2013	**F**	Ø270	OEM
HUSQVARNA	**TXC**	310	2011	**F**	Ø270	OEM
HUSQVARNA	**TC**	450	2007 - 2010	**F**	Ø270	OEM
HUSQVARNA	**TE**	450	2006 - 2010	**F**	Ø270	OEM
HUSQVARNA	**TC**	510	2002 - 2006	**F**	Ø270	OEM
HUSQVARNA	**TC**	510	2007 - 2009	**F**	Ø270	OEM
HUSQVARNA	**TE**	510	2006 - 2010	**F**	Ø270	OEM

MARCA BRAND	MODELLO MODEL	CC	ANNO YEAR	POSIZIONE POSITION	Ø DISCO Ø DISK	PINZA CALIPER
KTM	**EXC**	125	2000 - 2009	**F**	Ø270	OEM
KTM	**GS**	125	1993 - 1997	**F**	Ø270	OEM
KTM	**MX**	125	1992	**F**	Ø270	OEM
KTM	**SX**	125	1993 - 2008	**F**	Ø270	OEM
KTM	**SXS**	125	2000 - 2008	**F**	Ø270	OEM
KTM	**SX**	144	2007 - 2008	**F**	Ø270	OEM
KTM	**EXC**	200	2000 - 2009	**F**	Ø270	OEM
KTM	**MXC**	200	1998 - 2003	**F**	Ø270	OEM
KTM	**SX**	200	2003 - 2008	**F**	Ø270	OEM
KTM	**XC W**	200	2006 - 2009	**F**	Ø270	OEM
KTM	**EXC**	250	2000 - 2009	**F**	Ø270	OEM
KTM	**EXC F**	250	2003 - 2009	**F**	Ø270	OEM
KTM	**EXC G**	250	2004 - 2009	**F**	Ø270	OEM
KTM	**GS**	250	1993 - 1997	**F**	Ø270	OEM
KTM	**MX**	250	1992	**F**	Ø270	OEM
KTM	**MXC**	250	1998 - 2003	**F**	Ø270	OEM
KTM	**SX**	250	1993	**F**	Ø270	OEM
KTM	**SX**	250	2000 - 2008	**F**	Ø270	OEM
KTM	**SX F**	250	2003 - 2008	**F**	Ø270	OEM
KTM	**SXS**	250	2003 - 2008	**F**	Ø270	OEM
KTM	**SXS F**	250	2006 - 2008	**F**	Ø270	OEM
KTM	**XC F**	250	2007 - 2009	**F**	Ø270	OEM
KTM	**XC W**	250	2006 - 2009	**F**	Ø270	OEM
KTM	**EXC**	300	1997 - 2009	**F**	Ø270	OEM
KTM	**GS**	300	1993 - 1996	**F**	Ø270	OEM
KTM	**MX**	300	1992	**F**	Ø270	OEM
KTM	**MXC**	300	1998 - 2005	**F**	Ø270	OEM
KTM	**SX**	300	1993	**F**	Ø270	OEM
KTM	**SX**	300	2000 - 2003	**F**	Ø270	OEM
KTM	**XC**	300	2006 - 2009	**F**	Ø270	OEM
KTM	**XC W**	300	2006 - 2009	**F**	Ø270	OEM
KTM	**GS**	350	1993	**F**	Ø270	OEM
KTM	**EXC**	380	1998 - 1999	**F**	Ø270	OEM
KTM	**EXC**	380	2000 - 2002	**F**	Ø270	OEM
KTM	**MXC**	380	1998 - 2001	**F**	Ø270	OEM
KTM	**SX**	380	1998 - 2002	**F**	Ø270	OEM
KTM	**EGS**	400	1996 - 1999	**F**	Ø270	OEM
KTM	**EXC**	400	1994 - 2009	**F**	Ø270	OEM
KTM	**EXC G**	400	2004 - 2006	**F**	Ø270	OEM
KTM	**SX**	400	2000 - 2002	**F**	Ø270	OEM
KTM	**XC W**	400	2007 - 2009	**F**	Ø270	OEM
KTM	**EXC**	450	2003 - 2009	**F**	Ø270	OEM
KTM	**EXC R**	450	2008 - 2009	**F**	Ø270	OEM
KTM	**MXC**	450	2003 - 2006	**F**	Ø270	OEM
KTM	**SX F**	450	2003 - 2008	**F**	Ø270	OEM
KTM	**SXS**	450	2003 - 2008	**F**	Ø270	OEM
KTM	**SXS F**	450	2003 - 2008	**F**	Ø270	OEM
KTM	**XC**	450	2007 - 2009	**F**	Ø270	OEM
KTM	**XC F**	450	2007 - 2009	**F**	Ø270	OEM
KTM	**XC G**	450	2006	**F**	Ø270	OEM
KTM	**XC W**	450	2007 - 2009	**F**	Ø270	OEM
KTM	**MX**	500	1992	**F**	Ø270	OEM
KTM	**SX**	500	1993 - 1995	**F**	Ø270	OEM
KTM	**SX F**	505	2007 - 2008	**F**	Ø270	OEM
KTM	**XC F**	505	2007 - 2009	**F**	Ø270	OEM
KTM	**EXC**	520	2000 - 2002	**F**	Ø270	OEM
KTM	**MXC**	520	2001 - 2002	**F**	Ø270	OEM
KTM	**SX**	520	2000 - 2002	**F**	Ø270	OEM
KTM	**EXC**	525	2003 - 2008	**F**	Ø270	OEM
KTM	**MXC**	525	2003 - 2005	**F**	Ø270	OEM
KTM	**SX**	525	2003 - 2006	**F**	Ø270	OEM
KTM	**XC**	525	2006 - 2008	**F**	Ø270	OEM
KTM	**XC G**	525	2006 - 2008	**F**	Ø270	OEM
KTM	**XC W**	525	2006 - 2008	**F**	Ø270	OEM
KTM	**EXC R**	530	2008 - 2009	**F**	Ø270	OEM
KTM	**SXC**	540	1999 - 2000	**F**	Ø270	OEM
KTM	**SXS**	540	2001 - 2006	**F**	Ø270	OEM
KTM	**GS**	600	1993	**F**	Ø270	OEM
KTM	**LC4 SC SUPERCOMP**	625	2002	**F**	Ø270	OEM
KTM	**SXC**	625	2003 - 2008	**F**	Ø270	OEM

MARCA BRAND	MODELLO MODEL	CC	ANNO YEAR	POSIZIONE POSITION	Ø DISCO Ø DISK	PINZA CALIPER
POW78						
HONDA	**CR E**	125	2004 - 2008	**F**	Ø260	OEM
HONDA	**CR R**	125	2004 - 2008	**F**	Ø260	OEM
HONDA	**CR E**	250	2004 - 2008	**F**	Ø260	OEM
HONDA	**CR R**	250	2004 - 2008	**F**	Ø260	OEM
HONDA	**CRF R**	250	2004 - 2014	**F**	Ø260	OEM
HONDA	**CRF X**	250	2004 - 2012	**F**	Ø260	OEM
HONDA	**CRF R**	450	2004 - 2014	**F**	Ø260	OEM
HONDA	**CRF X**	450	2004 - 2012	**F**	Ø260	OEM
HONDA-HM	**CRF R**	150	2007 - 2009	**F**	Ø260	OEM
HONDA-HM	**CRF ENDURO**	230	2004 - 2010	**F**	Ø260	OEM
HONDA-HM	**CRE F**	250	2004 - 2009	**F**	Ø260	OEM
HONDA-HM	**CRE F 250 R**	250	2004 - 2009	**F**	Ø260	OEM
HONDA-HM	**CRE F 250 X**	250	2008 - 2011	**F**	Ø260	OEM
HONDA-HM	**CRE X**	250	2004 - 2009	**F**	Ø260	OEM
HONDA-HM	**CRF F**	250	2004 - 2009	**F**	Ø260	OEM
HONDA-HM	**CRF R**	250	2008 - 2013	**F**	Ø260	OEM
HONDA-HM	**CRE F 300 X**	300	2008 - 2009	**F**	Ø260	OEM
HONDA-HM	**CRE F 450 R ENDURO**	450	2004	**F**	Ø260	OEM
HONDA-HM	**CRE F 450 R ENDURO**	450	2005 - 2008	**F**	Ø260	OEM
HONDA-HM	**CRE F 450 X**	450	2004 - 2008	**F**	Ø260	OEM
HONDA-HM	**CRE F 450 X**	450	2009	**F**	Ø260	OEM
HONDA-HM	**CRF R**	450	2004 - 2014	**F**	Ø260	OEM
HONDA-HM	**CRE F 490 X**	490	2007	**F**	Ø260	OEM
HONDA-HM	**CRE F 500 X**	500	2008 - 2009	**F**	Ø260	OEM
HONDA-HM	**CRM F 500 X**	500	2011	**F**	Ø260	OEM
YAMAHA	**YZ**	125	2008 - 2012	**F**	Ø270	OEM
YAMAHA	**YZ**	125	2013 - 2015	**F**	Ø270	OEM
YAMAHA	**YZ**	250	2008 - 2011	**F**	Ø270	OEM
YAMAHA	**YZ**	250	2012	**F**	Ø270	OEM
YAMAHA	**YZ**	250	2013 - 2014	**F**	Ø270	OEM
YAMAHA	**YZ F**	250	2007 - 2015	**F**	Ø270	OEM
YAMAHA	**YZ F**	450	2008 - 2015	**F**	Ø270	OEM
POW79						
HONDA	**CR E**	125	2004 - 2008	**F**	Ø270	OEM
HONDA	**CR R**	125	2004 - 2008	**F**	Ø270	OEM
HONDA	**CR E**	250	2004 - 2008	**F**	Ø270	OEM
HONDA	**CR R**	250	2004 - 2008	**F**	Ø270	OEM
HONDA	**CRF R**	250	2004 - 2014	**F**	Ø270	OEM
HONDA	**CRF X**	250	2004 - 2011	**F**	Ø270	OEM
HONDA	**CRF X**	250	2012	**F**	Ø270	OEM
HONDA	**CRF R**	450	2004 - 2014	**F**	Ø270	OEM
HONDA	**CRF X**	450	2004 - 2012	**F**	Ø270	OEM
HONDA-HM	**CRF R**	150	2007 - 2009	**F**	Ø270	OEM
HONDA-HM	**CRF ENDURO**	230	2004 - 2010	**F**	Ø270	OEM
HONDA-HM	**CRE F**	250	2004 - 2009	**F**	Ø270	OEM
HONDA-HM	**CRE F 250 R**	250	2004 - 2009	**F**	Ø270	OEM
HONDA-HM	**CRE F 250 X**	250	2008 - 2011	**F**	Ø270	OEM
HONDA-HM	**CRE X**	250	2004 - 2009	**F**	Ø270	OEM
HONDA-HM	**CRF F**	250	2004 - 2009	**F**	Ø270	OEM
HONDA-HM	**CRF R**	250	2008 - 2012	**F**	Ø270	OEM
HONDA-HM	**CRF R**	250	2013	**F**	Ø270	OEM
HONDA-HM	**CRE F 300 X**	300	2008 - 2009	**F**	Ø270	OEM
HONDA-HM	**CRE F 450 R ENDURO**	450	2004 - 2008	**F**	Ø270	OEM
HONDA-HM	**CRE F 450 X**	450	2004 - 2009	**F**	Ø270	OEM
HONDA-HM	**CRF R**	450	2004 - 2014	**F**	Ø270	OEM
HONDA-HM	**CRE F 490 X**	490	2007	**F**	Ø270	OEM
HONDA-HM	**CRE F 500 X**	500	2008 - 2009	**F**	Ø270	OEM
HONDA-HM	**CRM F 500 X**	500	2011	**F**	Ø270	OEM
POW80						
YAMAHA	**WR**	125	1998 - 2007	**F**	Ø320	OEM
YAMAHA	**YZ**	125	1998 - 2007	**F**	Ø320	OEM
YAMAHA	**WR**	250	1998 - 2001	**F**	Ø320	OEM
YAMAHA	**WR**	250	2003 - 2007	**F**	Ø320	OEM
YAMAHA	**WR F**	250	2001 - 2013	**F**	Ø320	OEM
YAMAHA	**YZ**	250	1998 - 2007	**F**	Ø320	OEM
YAMAHA	**YZ F**	250	2001 - 2006	**F**	Ø320	OEM
YAMAHA	**WR F**	400	1998 - 2000	**F**	Ø320	OEM
YAMAHA	**YZ F**	400	1998 - 2000	**F**	Ø320	OEM

CALIPER BRACKETS / SUPPORTI PINZA

MARCA BRAND	MODELLO MODEL	CC	ANNO YEAR	POSIZIONE POSITION	Ø DISCO Ø DISK	PINZA CALIPER
YAMAHA	**WR F**	426	2001 - 2002	**F**	Ø320	OEM
YAMAHA	**YZ F**	426	2000 - 2002	**F**	Ø320	OEM
YAMAHA	**WR F**	450	2003 - 2014	**F**	Ø320	OEM
YAMAHA	**YZ F**	450	2003 - 2007	**F**	Ø320	OEM
POW81						
HUSABERG	**FE**	400	2000 - 2003	**F**	Ø320	OEM
HUSABERG	**FE E**	400	2001 - 2003	**F**	Ø320	OEM
HUSABERG	**FS C**	400	2001 - 2003	**F**	Ø320	OEM
HUSABERG	**FS E**	400	2001 - 2003	**F**	Ø320	OEM
HUSABERG	**FE E**	450	2004	**F**	Ø320	OEM
HUSABERG	**FS C**	450	2003 - 2004	**F**	Ø320	OEM
HUSABERG	**FS E**	450	2003 - 2004	**F**	Ø320	OEM
HUSABERG	**FC**	470	2001 - 2002	**F**	Ø320	OEM
HUSABERG	**FC**	501	1999 - 2003	**F**	Ø320	OEM
HUSABERG	**FE E**	501	1999 - 2004	**F**	Ø320	OEM
HUSABERG	**FE S**	501	1999 - 2004	**F**	Ø320	OEM
HUSABERG	**FC**	550	2001 - 2005	**F**	Ø320	OEM
HUSABERG	**FE E**	550	2004 - 2008	**F**	Ø320	OEM
HUSABERG	**FC**	600	1999 - 2003	**F**	Ø320	OEM
HUSABERG	**FE E**	600	1999 - 2002	**F**	Ø320	OEM
HUSABERG	**FE E**	650	2001 - 2008	**F**	Ø320	OEM
HUSABERG	**FS C**	650	2001 - 2004	**F**	Ø320	OEM
HUSABERG	**FS E**	650	2001 - 2004	**F**	Ø320	OEM
HUSABERG	**FX E**	650	2001 - 2005	**F**	Ø320	OEM
HUSQVARNA	**TE**	125	2010 - 2014	**F**	Ø320	OEM
HUSQVARNA	**TC**	450	2007 - 2010	**F**	Ø320	OEM
HUSQVARNA	**TE**	450	2006 - 2010	**F**	Ø320	OEM
HUSQVARNA	**TC**	510	2007 - 2009	**F**	Ø320	OEM
HUSQVARNA	**TE**	510	2006 - 2010	**F**	Ø320	OEM
KTM	**EXC**	125	2000 - 2008	**F**	Ø320	OEM
KTM	**GS**	125	1993 - 1997	**F**	Ø320	OEM
KTM	**MX**	125	1992	**F**	Ø320	OEM
KTM	**SX**	125	1993 - 2008	**F**	Ø320	OEM
KTM	**SXS**	125	2000 - 2008	**F**	Ø320	OEM
KTM	**SX**	144	2007 - 2008	**F**	Ø320	OEM
KTM	**EXC**	200	2000 - 2009	**F**	Ø320	OEM
KTM	**MXC**	200	1998 - 2003	**F**	Ø320	OEM
KTM	**SX**	200	2003 - 2009	**F**	Ø320	OEM
KTM	**XC W**	200	2006 - 2008	**F**	Ø320	OEM
KTM	**EXC**	250	2000 - 2009	**F**	Ø320	OEM
KTM	**EXC F**	250	2003 - 2009	**F**	Ø320	OEM
KTM	**EXC G**	250	2004 - 2009	**F**	Ø320	OEM
KTM	**GS**	250	1993 - 1997	**F**	Ø320	OEM
KTM	**MX**	250	1992	**F**	Ø320	OEM
KTM	**MXC**	250	1998 - 2003	**F**	Ø320	OEM
KTM	**SX**	250	1993	**F**	Ø320	OEM
KTM	**SX**	250	2000 - 2008	**F**	Ø320	OEM
KTM	**SX F**	250	2003 - 2008	**F**	Ø320	OEM
KTM	**SXS**	250	2003 - 2008	**F**	Ø320	OEM
KTM	**SXS F**	250	2006 - 2008	**F**	Ø320	OEM
KTM	**XC F**	250	2007 - 2012	**F**	Ø320	OEM
KTM	**XC W**	250	2006 - 2008	**F**	Ø320	OEM
KTM	**EXC**	300	2000 - 2009	**F**	Ø320	OEM
KTM	**GS**	300	1991 - 1996	**F**	Ø320	OEM
KTM	**MX**	300	1992	**F**	Ø320	OEM
KTM	**MXC**	300	1998 - 2005	**F**	Ø320	OEM
KTM	**SX**	300	1993	**F**	Ø320	OEM
KTM	**SX**	300	2000 - 2003	**F**	Ø320	OEM
KTM	**XC**	300	2006 - 2009	**F**	Ø320	OEM
KTM	**XC W**	300	2006 - 2008	**F**	Ø320	OEM
KTM	**GS**	350	1993	**F**	Ø320	OEM
KTM	**EXC**	380	2000 - 2002	**F**	Ø320	OEM
KTM	**SX**	380	1998 - 2002	**F**	Ø320	OEM
KTM	**EXC**	400	2000 - 2009	**F**	Ø320	OEM
KTM	**EXC G**	400	2004 - 2006	**F**	Ø320	OEM
KTM	**SX**	400	2000 - 2002	**F**	Ø320	OEM
KTM	**XC W**	400	2007 - 2008	**F**	Ø320	OEM
KTM	**EXC**	450	2003 - 2009	**F**	Ø320	OEM
KTM	**EXC R**	450	2008 - 2009	**F**	Ø320	OEM
KTM	**MXC**	450	2003 - 2006	**F**	Ø320	OEM

MARCA BRAND	MODELLO MODEL	CC	ANNO YEAR	POSIZIONE POSITION	Ø DISCO Ø DISK	PINZA CALIPER
KTM	**SX F**	450	2003 - 2008	**F**	Ø320	OEM
KTM	**SXS**	450	2003 - 2008	**F**	Ø320	OEM
KTM	**SXS F**	450	2003 - 2008	**F**	Ø320	OEM
KTM	**XC**	450	2007 - 2008	**F**	Ø320	OEM
KTM	**XC F**	450	2007 - 2008	**F**	Ø320	OEM
KTM	**XC G**	450	2006	**F**	Ø320	OEM
KTM	**XC W**	450	2007 - 2008	**F**	Ø320	OEM
KTM	**MX**	500	1992	**F**	Ø320	OEM
KTM	**SX**	500	1993 - 1995	**F**	Ø320	OEM
KTM	**XC F**	505	2007 - 2008	**F**	Ø320	OEM
KTM	**EXC**	520	2000 - 2002	**F**	Ø320	OEM
KTM	**MXC**	520	2001 - 2002	**F**	Ø320	OEM
KTM	**SX**	520	2000 - 2002	**F**	Ø320	OEM
KTM	**EXC**	525	2003 - 2008	**F**	Ø320	OEM
KTM	**MXC**	525	2003 - 2005	**F**	Ø320	OEM
KTM	**SX**	525	2003 - 2006	**F**	Ø320	OEM
KTM	**XC**	525	2006 - 2008	**F**	Ø320	OEM
KTM	**XC G**	525	2006 - 2008	**F**	Ø320	OEM
KTM	**XC W**	525	2006 - 2008	**F**	Ø320	OEM
KTM	**EXC R**	530	2008 - 2009	**F**	Ø320	OEM
KTM	**SXC**	540	1999 - 2000	**F**	Ø320	OEM
KTM	**SXS**	540	2001 - 2006	**F**	Ø320	OEM
KTM	**GS**	600	1993	**F**	Ø320	OEM
KTM	**LC4 SC SUPERCOMP**	620	2000 - 2004	**F**	Ø320	OEM
KTM	**LC4 SUPERMOTO**	620	1999 - 2001	**F**	Ø320	OEM
KTM	**LC4 SC SUPERCOMP**	625	2002	**F**	Ø320	OEM
KTM	**LC4 SUPERMOTO**	625	2002 - 2004	**F**	Ø320	OEM
KTM	**SXC**	625	2003 - 2008	**F**	Ø320	OEM
KTM	**LC4 SUPERMOTO**	640	2000 - 2002	**F**	Ø320	OEM
POW83						
HONDA	**CR E**	125	2004 - 2008	**F**	Ø320	OEM
HONDA	**CR R**	250	2004 - 2008	**F**	Ø320	OEM
HONDA	**CRF R**	250	2004 - 2014	**F**	Ø320	OEM
HONDA	**CRF X**	250	2004 - 2012	**F**	Ø320	OEM
HONDA	**CRF R**	450	2004 - 2014	**F**	Ø320	OEM
HONDA	**CRF X**	450	2004 - 2012	**F**	Ø320	OEM
HONDA-HM	**CR E SUPERMOTARD**	125	2004 - 2008	**F**	Ø320	OEM
HONDA-HM	**CR E SUPERMOTARD**	250	2004 - 2009	**F**	Ø320	OEM
HONDA-HM	**CRE F**	250	2004 - 2009	**F**	Ø320	OEM
HONDA-HM	**CRE X**	250	2004 - 2008	**F**	Ø320	OEM
HONDA-HM	**CRF R SUPERMOTARD**	250	2004 - 2008	**F**	Ø320	OEM
HONDA-HM	**CRF X SUPERMOTARD**	250	2004 - 2008	**F**	Ø320	OEM
HONDA-HM	**CRF X SUPERMOTARD**	450	2004 - 2009	**F**	Ø320	OEM
POW84						
KAWASAKI	**KX**	125	1995 - 2008	**F**	Ø320	OEM
KAWASAKI	**KLX R**	250	1993 - 1996	**F**	Ø320	OEM
KAWASAKI	**KX**	250	1994 - 2008	**F**	Ø320	OEM
KAWASAKI	**KX F**	250	2004 - 2015	**F**	Ø320	OEM
KAWASAKI	**KLX R**	300	1997 - 2007	**F**	Ø320	OEM
KAWASAKI	**KLX R**	450	2007 - 2014	**F**	Ø320	OEM
KAWASAKI	**KX F**	450	2006 - 2015	**F**	Ø320	OEM
KAWASAKI	**KX**	500	1994 - 2004	**F**	Ø320	OEM
KAWASAKI	**KLX R**	650	1993 - 2003	**F**	Ø320	OEM
SUZUKI	**RM**	125	1996 - 2009	**F**	Ø320	OEM
SUZUKI	**SV SM (Italy)**	125	2005 - 2006	**F**	Ø320	OEM
SUZUKI	**RM**	250	1996 - 2012	**F**	Ø320	OEM
SUZUKI	**RMZ**	250	2004 - 2015	**F**	Ø320	OEM
SUZUKI	**DRZ E**	400	2000 - 2008	**F**	Ø320	OEM
SUZUKI	**DRZ S**	400	2000 - 2009	**F**	Ø320	OEM
SUZUKI	**RMX**	450	2010 - 2012	**F**	Ø320	OEM
SUZUKI	**RMZ**	450	2005 - 2015	**F**	Ø320	OEM
POW106						
YAMAHA	**YZ**	125	2008 - 2015	**F**	Ø260	OEM
YAMAHA	**YZ**	250	2008 - 2011	**F**	Ø260	OEM
YAMAHA	**YZ**	250	2012 - 2014	**F**	Ø260	OEM
YAMAHA	**YZ F**	250	2007 - 2015	**F**	Ø260	OEM
YAMAHA	**YZ F**	450	2008 - 2015	**F**	Ø260	OEM

MARCA BRAND	MODELLO MODEL	CC	ANNO YEAR	POSIZIONE POSITION	Ø DISCO Ø DISK	PINZA CALIPER
POW4008						
HUSABERG	**TE**	125	2012 - 2014	**F**	Ø270	OEM
HUSABERG	**FE**	250	2013 - 2014	**F**	Ø270	OEM
HUSABERG	**TE**	250	2011 - 2014	**F**	Ø270	OEM
HUSABERG	**TE**	300	2011 - 2014	**F**	Ø270	OEM
HUSABERG	**FE**	350	2013 - 2014	**F**	Ø270	OEM
HUSABERG	**FE**	390	2010 - 2012	**F**	Ø270	OEM
HUSABERG	**FE**	450	2009 - 2014	**F**	Ø270	OEM
HUSABERG	**FX**	450	2010	**F**	Ø270	OEM
HUSABERG	**FE**	510	2013 - 2014	**F**	Ø270	OEM
HUSABERG	**FE**	570	2010 - 2012	**F**	Ø270	OEM
HUSQVARNA	**TC**	125	2014	**F**	Ø270	OEM
HUSQVARNA	**TE**	125	2014	**F**	Ø270	OEM
HUSQVARNA	**FC**	250	2014	**F**	Ø270	OEM
HUSQVARNA	**FE**	250	2014 - 2015	**F**	Ø270	OEM
HUSQVARNA	**TC**	250	2014	**F**	Ø270	OEM
HUSQVARNA	**TE**	250	2011 - 2014	**F**	Ø270	OEM
HUSQVARNA	**TE**	300	2014 - 2015	**F**	Ø270	OEM
HUSQVARNA	**TE**	310	2009 - 2013	**F**	Ø270	OEM
HUSQVARNA	**FC**	350	2014 - 2015	**F**	Ø270	OEM
HUSQVARNA	**FE**	350	2014	**F**	Ø270	OEM
HUSQVARNA	**TC**	449	2011 - 2013	**F**	Ø270	OEM
HUSQVARNA	**FC**	450	2014 - 2015	**F**	Ø270	OEM
HUSQVARNA	**FE**	450	2014 - 2015	**F**	Ø270	OEM
HUSQVARNA	**TXC**	450	2011 - 2012	**F**	Ø270	OEM
HUSQVARNA	**TXC**	480	2013	**F**	Ø270	OEM
HUSQVARNA	**FE**	510	2014	**F**	Ø270	OEM
HUSQVARNA	**TE**	511	2011 - 2013	**F**	Ø270	OEM
HUSQVARNA	**TXC**	511	2011 - 2013	**F**	Ø270	OEM
KTM	**EXC**	125	2010 - 2015	**F**	Ø270	OEM
KTM	**EXC SIX DAYS**	125	2009 - 2015	**F**	Ø270	OEM
KTM	**SX**	125	2009 - 2015	**F**	Ø270	OEM
KTM	**SXS**	125	2009 - 2010	**F**	Ø270	OEM
KTM	**SX**	144	2009 - 2010	**F**	Ø270	OEM
KTM	**SX**	150	2008 - 2015	**F**	Ø270	OEM
KTM	**EXC**	200	2010 - 2015	**F**	Ø270	OEM
KTM	**SX**	200	2009	**F**	Ø270	OEM
KTM	**EXC**	250	2010 - 2014	**F**	Ø270	OEM
KTM	**EXC E**	250	2015	**F**	Ø270	OEM
KTM	**EXC F**	250	2010 - 2015	**F**	Ø270	OEM
KTM	**EXC F SIX DAYS**	250	2009 - 2015	**F**	Ø270	OEM
KTM	**EXC SIX DAYS**	250	2009 - 2015	**F**	Ø270	OEM
KTM	**SX**	250	2009 - 2015	**F**	Ø270	OEM
KTM	**SX F**	250	2009 - 2015	**F**	Ø270	OEM
KTM	**SXS**	250	2009 - 2010	**F**	Ø270	OEM
KTM	**SXS F**	250	2009	**F**	Ø270	OEM
KTM	**XC F**	250	2010 - 2012	**F**	Ø270	OEM
KTM	**XC W**	250	2010 - 2012	**F**	Ø270	OEM
KTM	**EXC**	300	2010 - 2014	**F**	Ø270	OEM
KTM	**EXC E**	300	2015	**F**	Ø270	OEM
KTM	**EXC SIX DAYS**	300	2009 - 2015	**F**	Ø270	OEM
KTM	**XC W**	300	2010 - 2012	**F**	Ø270	OEM
KTM	**EXC F**	350	2010 - 2015	**F**	Ø270	OEM
KTM	**EXC F SIX DAYS**	350	2011 - 2015	**F**	Ø270	OEM
KTM	**SX F**	350	2011 - 2015	**F**	Ø270	OEM
KTM	**EXC**	400	2010 - 2011	**F**	Ø270	OEM
KTM	**EXC**	450	2010 - 2015	**F**	Ø270	OEM
KTM	**EXC SIX DAYS**	450	2009 - 2015	**F**	Ø270	OEM
KTM	**SX F**	450	2009 - 2015	**F**	Ø270	OEM
KTM	**SXS**	450	2009 - 2010	**F**	Ø270	OEM
KTM	**SXS F**	450	2009 - 2010	**F**	Ø270	OEM
KTM	**EXC**	500	2011 - 2015	**F**	Ø270	OEM
KTM	**EXC SIX DAYS**	500	2011 - 2015	**F**	Ø270	OEM
KTM	**SX F**	505	2009	**F**	Ø270	OEM
KTM	**EXC**	530	2010 - 2011	**F**	Ø270	OEM
KTM	**EXC SIX DAYS**	530	2009	**F**	Ø270	OEM

KIT RICAMBIO PINZE – CALIPER REPLACEMENT KIT

KR0001 • Kit ricambio OR+PISTONCINI per pinze BRAKING scooter-trial
• Replacement kit O-RINGS+PISTONS for scooter-trial BRAKING caliper

KR0002 • Kit ricambio OR+PISTONCINI per pinze BRAKING cerchio BRR
• Replacement kit O-RINGS+PISTONS for BRAKING caliper/BRAKING BRR wheels

KR0007 • Kit ricambio OR TONDI per pinze BRAKING
C41721 - C41821 - C41921 - C42221 - C42321 - C42421 - C42521 - C43321 - C44121 - C44221
• Replacement kit ROUND O-RINGS for BRAKING calipers
C41721 - C41821 - C41921 - C42221 - C42321 - C42421 - C42521 - C43321 - C44121 - C44221

KR0014 • Kit ricambio vite pastiglia per pinza BRAKING 4 pistoncini MY01-04
• Replacement kit pad pin for BRAKING caliper 4 pistons MY01-04

KR0015 • Kit ricambio perno pastiglia pinza BRAKING 4 pistoncini MY01-04 e per pinze per cerchi BRR
• Replacement kit pad pin for BRAKING caliper 4 pistons MY01-04 and calipers for BRR Wheels

KR0020 • Kit ricambio OR+PISTONCINI per pinza BRAKING 4 pistoncini MY04
• Replacement kit O-RINGS+PISTONS for 4 pistons BRAKING caliper MY04

KR0021 • Kit ricambio OR+PISTONCINI per pinza BRAKING 4 pistoncini MY01
• Replacement kit O-RINGS+PISTONS for 4 pistons BRAKING caliper MY01

KR0076 • Kit ricambio spurgo+gommino per pinze radiali 4 pistoncini e per pinze CA2401/02 - CA1401/7 - CA2501 - CA2701
• Replacement kit bleeder and bleeder cover for radial calipers 4 pistons and for calipers CA2401/02 - CA1401/7 - CA2501 - CA2701

KR0084 • Kit ricambio molla contrasto pastiglia per pinza BRAKING CA2401-CA2402
• Replacement kit pads spring for BRAKING calipers CA2401-CA2402

KR0085 • Kit ricambio perni flottanza per pinze BRAKING CA2401/2 - CA1400/07
• Replacement kit floating pin for BRAKING calipers CA2401/2 - CA1400/07

KR0086 • Kit ricambio perno pastiglia per pinza BRAKING CA2401/2 - CA1400/7
• Replacement kit pin pad for BRAKING calipers CA2401/2 - CA1400/7

KR0087 • Kit ricambio molla contrasto pastiglia per pinze CA1401 - CA1402 - CA1404 - CA1407
• Replacement kit pads spring for BRAKING caliper CA1401 - CA1402 - CA1404 - CA1407

KR0088 • Kit ricambio perno pastiglia per pinza BRAKING CA2501
• Replacement kit pad pin for BRAKING caliper CA2501

KR0089 • Kit ricambio flottanza molla per POW per pinza BRAKING C20621-C20721-C20821-C20921-C21021-C21121
• Replacement kit spring for pad housing for BRAKING calipers C20621-C20721-C20821-C20921-C21021-C21121

KR0092 • kit ricambio flottanza molla per POW per pinza BRAKING CA2501
• Replacement kit spring for pad housing for BRAKING calipers CA2501

KR0093 • Kit ricambio molla contrasto pastiglia per pinza BRAKING CA2501-CA1403-CA1405-CA1406
• Replacement kit pads spring for BRAKING caliper CA2501-CA1403-CA1405-CA1406

KR0094 • Kit ricambio perni flottanza per pinza BRAKING CA2501-C21521
• Replacement kit floating pin for BRAKING caliper BRAKING CA2501-C21521

KR0095 • Kit ricambio OR+PISTONCINI per pinza BRAKING CA2401-CA2402
• Replacement kit O-RINGS+PISTONS for BRAKING calipers CA2401-CA2402

KR0096 • Kit ricambio OR+PISTONCINI per pinza BRAKING CA1400/07
• Replacement kit O-RINGS+PISTONS for BRAKING calipers CA1400/07

KR0097 • Kit ricambio OR+PISTONCINI per pinza BRAKING CA2501
• Replacement kit O-RINGS+PISTONS for BRAKING caliper CA2501

KR0165 • Kit ricambio OR+PISTONCINI per pinze BRAKING cerchio BRR
• Replacement kit O-RINGS+PISTONS for for BRAKING caliper/BRAKING BRR wheels

KR0176 • Kit ricambio OR+PISTONCINI per pinze BRAKING C21520-C21521
• Replacement kit O-RINGS+PISTONS for for BRAKING caliper/BRAKING C21520-C21521

KR0183 • Kit ricambio MOLLA CONTRASTO pastiglia per pinze BRAKING AF4701-AF4702
• Replacement kit PAD SPRING for BRAKING caliper AF4701-AF4702

CAM-B1

The new master cylinder developed with the CAM CONTROL technology.
It proves a modularity designed for racing: strong grip and high control.
It comes with 3 different pistons from 19 to 15.

SERIES >	CAM-B1
DESCRIPTION >	M-CYLINDER BRAKE FRONT (Ø19, Ø17 or Ø15) FORGED
PART NO. >	MC9402 (Ø19); MC7402 (Ø17); MC5402 (Ø15);
CHARACTERISTICS >	CAM CONTROL TECHNOLOGY FORGED BODY & RADIAL DESIGN FORGED FOLDING EXTENDABLE LEVER

La nuova pompa sviluppata con tecnologia CAM CONTROL.
Modulabilità adatta all'utilizzo racing: ottimo grip e controllo.
Offerta con 3 pistoni differenti da 19, 17 e 15.

SERIE >	CAM-B1
DESCRIZIONE >	POMPA ANTERIORE FORGIATA (Ø19, Ø17 or Ø15)
CODICE >	MC9402 (Ø19); MC7402 (Ø17); MC5402 (Ø15);
CARATTERISTICHE >	TECNOLOGIA CAM CONTROL CORPO FORGIATO E DESIGN RADIALE LEVA FORGIATA RIPIEGABILE E ALLUNGABILE
ACCESSORI >	RINVIO SINISTRO (CODICE: KR0024) TUBI TX E RACCORDI RX

KR0024

RS-B1

The entry level radial master cylinder with full machined lever system.
It comes in Ø13, Ø16 and Ø19.

SERIES >	RS-B1
DESCRIPTION >	M-CYLINDER BRAKE FRONT CAST
PART NO. >	MC3601 (Ø13); MC9601 (Ø19); MC6601 (Ø16) MC9603 (Ø19); MC6603 (Ø16)
CHARACTERISTICS >	• RADIAL TYPE • SILVER FOLDING LEVER FULLY MACHINED (MC9601-MC6601-MC3601) • MULTI-ADJUST BLACK BRAKE LEVER (MC9603-MC6603) • OIL RESERVOIR INCLUDED • SWITCH STOP (DON'T FIT ON BMW MODEL) AND MIRROR CONNECTION INCLUDED
ACCESSORIES >	TX - RX LINES & FITTINGS MULTI-ADJUST LEVER (PART NO.: KR0106R) LEFT REMOTE CONTROL (PART NO.: KR0024)

La pompa freno entry level con leva snodata ricavata dal pieno.
Da Ø13, Ø16 e Ø19.

SERIE >	RS-B1
DESCRIZIONE >	POMPA FRENO FUSA ANTERIORE
CODICE >	MC3601 (Ø13); MC9601 (Ø19); MC6601 (Ø16) MC9603 (Ø19); MC6603 (Ø16)
CARATTERISTICHE >	• TIPO RADIALE • LEVA SILVER RIPIEGABILE RICAVATA DAL PIENO (MC9601-MC6601-MC3601) • LEVA PLURIREGOLABILE NERA RICAVATA DAL PIENO (MC9603-MC6603) • SERBATOIO DELL'OLIO INCLUSO • INTERRUTTORE DELLO STOP (NO MODELLI BMW) E BRACCIALETTO PER LO SPECCHIETTO INCLUSI
ACCESSORI >	TUBI TX E RACCORDI RX LEVA MULTI REGOLABILE (CODICE: KR0106R) RINVIO SINISTRO (CODICE: KR0024)

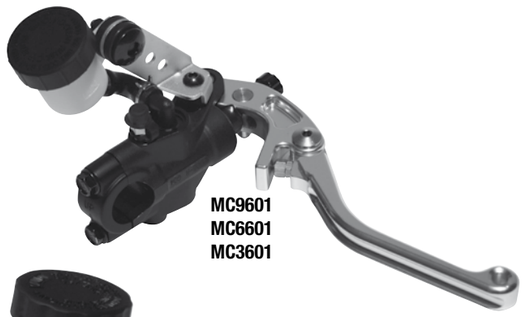

MC9601
MC6601
MC3601

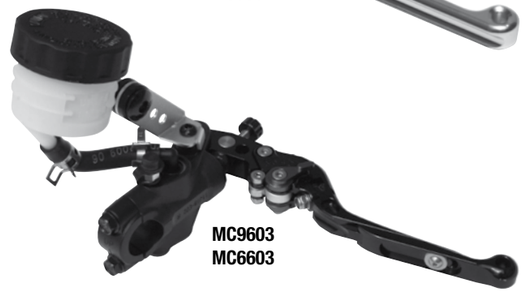

MC9603
MC6603

KR0106R

KR0024

RS-C1

The entry level radial clutch master cylinder with full machined lever system.
It comes in 2 different piston diameters: 13-16

SERIES >	RS-C1
DESCRIPTION >	M-CYLINDER CLUTCH CAST
PART NO. >	QC3601 (Ø13); QC6601 (Ø16); QC3603 (Ø13); QC6603 (Ø16)
CHARACTERISTICS >	• RADIAL TYPE • SILVER FOLDING LEVER FULLY MACHINED (QC3601-QC6601) • MULTI-ADJUST BLACK CLUTCH LEVER (QC6603-QC3603) • OIL 12CC RESERVOIR INCLUDED • MIRROR CONNECTION INCLUDED
ACCESSORIES >	TX - RX LINES & FITTINGS MULTI-ADJUST LEVER (PART NO.: KR0106L)

La pompa frizione radiale con leva snodata ricavata dal pieno.
In due misure di diametro pistoni: 13-16

SERIE >	RS-C1
DESCRIZIONE >	POMPA FRIZIONE FUSA
CODICE >	QC3601 (Ø13); QC6601 (Ø16); QC3603 (Ø13); QC6603 (Ø16)
CARATTERISTICHE >	• TIPO RADIALE • LEVA SILVER RIPIEGABILE RICAVATA DAL PIENO (QC3601-QC6601) • LEVA PLURIREGOLABILE NERA RICAVATA DAL PIENO (QC6603-QC3603) • SERBATOIO DELL'OLIO DA 12CC INCLUSO • BRACCIALETTO PER SPECCHIETTO INCLUSO
ACCESSORI >	TUBI TX E RACCORDI RX LEVA MULTI REGOLABILE (CODICE: KR0106L)

QC6601
QC3601

QC6603
QC3603

KR0106L

AMA SBK 2014 Champion
Josh Hayes - Team Monster Energy Yamaha Graves

* articolo in esaurimento / to be discontinued

LEVE SNODABILI ARGENTO - SILVER FOLDING EXTENDABLE LEVER

MARCA BRAND	MODELLO MODEL	CC	ANNO YEAR	POSIZIONE POSITION
LE1001*				
APRILIA	**RSV R**	1000	2004-2008	FRIZIONE-CLUTCH
DUCATI	**749 R**	748	2004-2006	FRIZIONE-CLUTCH
DUCATI	**749 S**	748	2003-2006	FRIZIONE-CLUTCH
DUCATI	**848 EVO**	850	2011	FRIZIONE-CLUTCH
DUCATI	**STREETFIGHTER**	850	2012-2014	FRIZIONE-CLUTCH
DUCATI	**999 R**	998	2003-2007	FRIZIONE-CLUTCH
DUCATI	**999 S**	998	2003-2007	FRIZIONE-CLUTCH
DUCATI	**MONSTER S4RS**	998	2006-2008	FRIZIONE-CLUTCH
DUCATI	**1098**	1100	2007-2008	FRIZIONE-CLUTCH
DUCATI	**1098 S**	1100	2007-2008	FRIZIONE-CLUTCH
DUCATI	**1098 S TRICOLORE**	1100	2007-2008	FRIZIONE-CLUTCH
DUCATI	**MONSTER 1100**	1100	2009-2010	FRIZIONE-CLUTCH
DUCATI	**MONSTER 1100 ABS**	1100	2010	FRIZIONE-CLUTCH
DUCATI	**MONSTER 1100 S**	1100	2009-2010	FRIZIONE-CLUTCH
DUCATI	**MONSTER 1100 S ABS**	1100	2010	FRIZIONE-CLUTCH
DUCATI	**STREETFIGHTER**	1100	2009-2011	FRIZIONE-CLUTCH
DUCATI	**STREETFIGHTER S**	1100	2009-2011	FRIZIONE-CLUTCH
DUCATI	**1198**	1198	2009-2011	FRIZIONE-CLUTCH
DUCATI	**1198 S**	1198	2009-2010	FRIZIONE-CLUTCH
DUCATI	**1198 SP**	1198	2011	FRIZIONE-CLUTCH
DUCATI	**DIAVEL**	1200	2011	FRIZIONE-CLUTCH
DUCATI	**DIAVEL CARBON**	1200	2011	FRIZIONE-CLUTCH
LE1002*				
HONDA	**CBR RR**	600	2007-2013	FRIZIONE-CLUTCH
HONDA	**CBR RR - ABS**	600	2009-2012	FRIZIONE-CLUTCH
HONDA	**CBR RR**	1000	2008-2011	FRIZIONE-CLUTCH
LE1003*				
HONDA	**CROSSRUNNER**	800	2011-2013	FRIZIONE-CLUTCH
HONDA	**CB 1000 R**	1000	2008-2009	FRIZIONE-CLUTCH
HONDA	**CBR RR**	1000	2004-2007	FRIZIONE-CLUTCH
LE1006*				
SUZUKI	**GSX F**	650	2011	FRIZIONE-CLUTCH
SUZUKI	**GSX R**	1000	2007-2008	FRIZIONE-CLUTCH
LE1007*				
YAMAHA	**YZF R1**	1000	1998-2011	FRIZIONE-CLUTCH
LE1008*				
APRILIA	**RSV R**	1000	2004-2008	BRAKE-FRENO
DUCATI	**749 R**	748	2004-2006	BRAKE-FRENO
DUCATI	**749 S**	748	2003-2006	BRAKE-FRENO
DUCATI	**848 EVO**	850	2011	BRAKE-FRENO
DUCATI	**STREETFIGHTER**	850	2012-2014	BRAKE-FRENO
DUCATI	**999 R**	998	2003-2007	BRAKE-FRENO
DUCATI	**999 S**	998	2003-2007	BRAKE-FRENO
DUCATI	**MONSTER S4RS**	998	2006-2008	BRAKE-FRENO
DUCATI	**1098**	1100	2007-2008	BRAKE-FRENO
DUCATI	**1098 S**	1100	2007-2008	BRAKE-FRENO

MARCA BRAND	MODELLO MODEL	CC	ANNO YEAR	POSIZIONE POSITION
DUCATI	**1098 S TRICOLORE**	1100	2007-2008	BRAKE-FRENO
DUCATI	**MONSTER 1100**	1100	2009-2010	BRAKE-FRENO
DUCATI	**MONSTER 1100 ABS**	1100	2010	BRAKE-FRENO
DUCATI	**MONSTER 1100 S**	1100	2009-2010	BRAKE-FRENO
DUCATI	**MONSTER 1100 S ABS**	1100	2010	BRAKE-FRENO
DUCATI	**STREETFIGHTER**	1100	2009-2011	BRAKE-FRENO
DUCATI	**STREETFIGHTER S**	1100	2009-2011	BRAKE-FRENO
DUCATI	**1198**	1198	2009-2011	BRAKE-FRENO
DUCATI	**1198 S**	1198	2009-2010	BRAKE-FRENO
DUCATI	**1198 SP**	1198	2011	BRAKE-FRENO
DUCATI	**DIAVEL**	1200	2011	BRAKE-FRENO
DUCATI	**DIAVEL CARBON**	1200	2011	BRAKE-FRENO
LE1009*				
HONDA	**CBR RR**	600	2007-2013	BRAKE-FRENO
HONDA	**CBR RR - ABS**	600	2009-2012	BRAKE-FRENO
HONDA	**CB 1000 R**	1000	2008-2009	BRAKE-FRENO
HONDA	**CBR RR**	1000	2004-2011	BRAKE-FRENO
LE1011*				
SUZUKI	**GSX R**	750	2004-2007	BRAKE-FRENO
SUZUKI	**GSX R**	1000	2005-2008	BRAKE-FRENO
LE1012*				
YAMAHA	**YZF R1**	1000	2004-2008	BRAKE-FRENO
LE1013*				
BMW	**K 1200 R**	1200	2005-2008	FRIZIONE-CLUTCH
BMW	**K 1200 S / ABS**	1200	2005-2011	FRIZIONE-CLUTCH
BMW	**R 1200 GS**	1200	2004-2011	FRIZIONE-CLUTCH
BMW	**R 1200 GS - ABS**	1200	2004-2011	FRIZIONE-CLUTCH
BMW	**R 1200 GS ADVENTURE**	1200	2006-2008	FRIZIONE-CLUTCH
BMW	**R 1200 R**	1200	2006-2012	FRIZIONE-CLUTCH
BMW	**R 1200 S**	1200	2005-2009	FRIZIONE-CLUTCH
BMW	**R 1200 ST**	1200	2006-2008	FRIZIONE-CLUTCH
BMW	**K 1300 R - ABS**	1300	2008-2011	FRIZIONE-CLUTCH
LE1014*				
BMW	**F 650 GS**	800	2009-2011	FRIZIONE-CLUTCH
BMW	**F 650 GS ABS**	800	2009-2011	FRIZIONE-CLUTCH
BMW	**F 800 GS**	800	2009-2011	FRIZIONE-CLUTCH
BMW	**F 800 S**	800	2006-2010	FRIZIONE-CLUTCH
BMW	**F 800 ST**	800	2006-2011	FRIZIONE-CLUTCH
LE1016*				
HONDA	**CB F HORNET**	600	2003-2006	FRIZIONE-CLUTCH
HONDA	**CBR F**	600	1987-2007	FRIZIONE-CLUTCH
HONDA	**NC S**	700	2012-2013	FRIZIONE-CLUTCH
HONDA	**NC S ABS**	700	2012-2013	FRIZIONE-CLUTCH
HONDA	**NC X**	700	2012-2013	FRIZIONE-CLUTCH
HONDA	**NC X ABS**	700	2012-2013	FRIZIONE-CLUTCH
HONDA	**NC S DCT**	750	2014	FRIZIONE-CLUTCH
HONDA	**NC X**	750	2014	FRIZIONE-CLUTCH
HONDA	**NC X DCT**	750	2014	FRIZIONE-CLUTCH
HONDA	**CB F HORNET**	900	2003-2008	FRIZIONE-CLUTCH
HONDA	**CBR RR**	900	1993-1999	FRIZIONE-CLUTCH
LE1018*				
YAMAHA	**XP T-MAX**	500	2001-2007	FRIZIONE-CLUTCH
LE1019*				
BMW	**K 1200 R**	1200	2005-2006	BRAKE-FRENO
BMW	**K 1200 S / ABS**	1200	2005-2006	BRAKE-FRENO
BMW	**R 1200 S**	1200	2005-2006	BRAKE-FRENO
LE1020*				
BMW	**F 650 GS**	800	2009-2011	BRAKE-FRENO
BMW	**F 650 GS ABS**	800	2009-2011	BRAKE-FRENO
BMW	**F 800 GS**	800	2009-2011	BRAKE-FRENO

MARCA BRAND	MODELLO MODEL	CC	ANNO YEAR	POSIZIONE POSITION
BMW	**F 800 S**	800	2006-2010	BRAKE-FRENO
BMW	**F 800 ST**	800	2006-2011	BRAKE-FRENO
BMW	**K 1200 R**	1200	2007-2008	BRAKE-FRENO
BMW	**K 1200 S / ABS**	1200	2007-2011	BRAKE-FRENO
BMW	**R 1200 GS**	1200	2004-2011	BRAKE-FRENO
BMW	**R 1200 GS - ABS**	1200	2004-2011	BRAKE-FRENO
BMW	**R 1200 GS ADVENTURE**	1200	2006-2008	BRAKE-FRENO
BMW	**R 1200 R**	1200	2006-2012	BRAKE-FRENO
BMW	**R 1200 S**	1200	2007-2009	BRAKE-FRENO
BMW	**R 1200 ST**	1200	2006-2008	BRAKE-FRENO
BMW	**K 1300 R - ABS**	1300	2008-2011	BRAKE-FRENO
LE1022*				
HONDA	**CB F HORNET**	600	2003-2006	BRAKE-FRENO
HONDA	**CBR F**	600	1987-2007	BRAKE-FRENO
HONDA	**NC S**	700	2012-2013	BRAKE-FRENO
HONDA	**NC S ABS**	700	2012-2013	BRAKE-FRENO
HONDA	**NC X**	700	2012-2013	BRAKE-FRENO
HONDA	**NC X ABS**	700	2012-2013	BRAKE-FRENO
HONDA	**NC S DCT**	750	2014	BRAKE-FRENO
HONDA	**NC X**	750	2014	BRAKE-FRENO
HONDA	**NC X DCT**	750	2014	BRAKE-FRENO
HONDA	**CROSSRUNNER**	800	2011-2013	BRAKE-FRENO
HONDA	**CB F HORNET**	900	2003-2008	BRAKE-FRENO
HONDA	**CBR RR**	900	1993-1999	BRAKE-FRENO
LE1023*				
SUZUKI	**GSX F**	650	2011	BRAKE-FRENO
SUZUKI	**GSX R HAYABUSA**	1300	2008-2012	BRAKE-FRENO
LE1025*				
YAMAHA	**XP T-MAX**	500	2001-2007	BRAKE-FRENO
LE1027*				
YAMAHA	**XP T-MAX**	500	2008-2011	FRIZIONE-CLUTCH
YAMAHA	**XP T-MAX ABS**	500	2008-2011	FRIZIONE-CLUTCH
YAMAHA	**XP T-MAX**	530	2012-2014	FRIZIONE-CLUTCH
YAMAHA	**XP T-MAX ABS**	530	2012-2014	FRIZIONE-CLUTCH
LE1028*				
YAMAHA	**XP T-MAX**	500	2008-2011	BRAKE-FRENO
YAMAHA	**XP T-MAX ABS**	500	2008-2011	BRAKE-FRENO
YAMAHA	**XP T-MAX**	530	2012-2014	BRAKE-FRENO
YAMAHA	**XP T-MAX ABS**	530	2012-2014	BRAKE-FRENO
LE1029*				
BMW	**S 1000 RR**	1000	2010-2012	FRIZIONE-CLUTCH
LE1030*				
DUCATI	**MONSTER S4R**	996	2003-2006	FRIZIONE-CLUTCH
DUCATI	**MULTISTRADA DS**	1100	2007-2010	FRIZIONE-CLUTCH
DUCATI	**MULTISTRADA DS S**	1100	2007-2010	FRIZIONE-CLUTCH
LE1031*				
DUCATI	**MONSTER**	696	2008-2011	FRIZIONE-CLUTCH
LE1033*				
DUCATI	**848**	850	2008-2010	FRIZIONE-CLUTCH
DUCATI	**848 EVO**	850	2012	FRIZIONE-CLUTCH
DUCATI	**HYPERMOTARD**	1100	2007-2009	FRIZIONE-CLUTCH
DUCATI	**HYPERMOTARD EVO**	1100	2010-2012	FRIZIONE-CLUTCH
DUCATI	**HYPERMOTARD EVO SP**	1100	2010-2012	FRIZIONE-CLUTCH
DUCATI	**HYPERMOTARD S**	1100	2007-2009	FRIZIONE-CLUTCH
DUCATI	**MONSTER EVO**	1100	2011-2012	FRIZIONE-CLUTCH
DUCATI	**STREETFIGHTER S**	1100	2012	FRIZIONE-CLUTCH
DUCATI	**DIAVEL**	1200	2012	FRIZIONE-CLUTCH
DUCATI	**MULTISTRADA**	1200	2012	FRIZIONE-CLUTCH
DUCATI	**PANIGALE**	1200	2012-2013	FRIZIONE-CLUTCH
DUCATI	**PANIGALE ABS**	1200	2012	FRIZIONE-CLUTCH
DUCATI	**PANIGALE S**	1200	2012-2013	FRIZIONE-CLUTCH
DUCATI	**PANIGALE S ABS**	1200	2012-2013	FRIZIONE-CLUTCH

MARCA BRAND	MODELLO MODEL	CC	ANNO YEAR	POSIZIONE POSITION
DUCATI	**PANIGALE S TRICOLORE**	1200	2012-2013	FRIZIONE-CLUTCH
MV AGUSTA	**F4 RR CORSACORTA**	1000	2011-2012	FRIZIONE-CLUTCH
LE1035*				
APRILIA	**RSV4 FACTORY**	1000	2009	FRIZIONE-CLUTCH
APRILIA	**RSV4 FACTORY APRC**	1000	2011	FRIZIONE-CLUTCH
APRILIA	**RSV4 R**	1000	2010	FRIZIONE-CLUTCH
APRILIA	**TUONO V4 R**	1000	2011	FRIZIONE-CLUTCH
APRILIA	**TUONO V4 R APRC**	1000	2011	FRIZIONE-CLUTCH
LE1037*				
APRILIA	**TUONO V4 R**	1000	2011	BRAKE-FRENO
APRILIA	**TUONO V4 R APRC**	1000	2011	BRAKE-FRENO
DUCATI	**MONSTER S4R**	996	2003-2006	BRAKE-FRENO
DUCATI	**MULTISTRADA DS**	1100	2007-2010	BRAKE-FRENO
DUCATI	**MULTISTRADA DS S**	1100	2007-2010	BRAKE-FRENO
LE1038*				
DUCATI	**MONSTER**	696	2008-2011	BRAKE-FRENO
LE1040*				
DUCATI	**848**	850	2008-2010	BRAKE-FRENO
DUCATI	**848 EVO**	850	2012	BRAKE-FRENO
DUCATI	**HYPERMOTARD**	1100	2007-2009	BRAKE-FRENO
DUCATI	**HYPERMOTARD EVO**	1100	2010-2012	BRAKE-FRENO
DUCATI	**HYPERMOTARD EVO SP**	1100	2010-2012	BRAKE-FRENO
DUCATI	**HYPERMOTARD S**	1100	2007-2009	BRAKE-FRENO
DUCATI	**MONSTER EVO**	1100	2011-2012	BRAKE-FRENO
DUCATI	**STREETFIGHTER S**	1100	2012	BRAKE-FRENO
DUCATI	**DIAVEL**	1200	2012	BRAKE-FRENO
DUCATI	**MULTISTRADA**	1200	2012	BRAKE-FRENO
DUCATI	**PANIGALE**	1200	2012-2013	BRAKE-FRENO
DUCATI	**PANIGALE ABS**	1200	2012	BRAKE-FRENO
DUCATI	**PANIGALE S**	1200	2012-2013	BRAKE-FRENO
DUCATI	**PANIGALE S ABS**	1200	2012-2013	BRAKE-FRENO
DUCATI	**PANIGALE S TRICOLORE**	1200	2012-2013	BRAKE-FRENO
LE1042*				
KAWASAKI	**GTR**	1400	2007-2011	FRIZIONE-CLUTCH
KAWASAKI	**ZZR**	1400	2006-2007	FRIZIONE-CLUTCH
KAWASAKI	**ZZR ABS**	1400	2008-2013	FRIZIONE-CLUTCH
LE1043*				
SUZUKI	**GSX R**	750	2004-2005	FRIZIONE-CLUTCH
LE1044*				
DUCATI	**MULTISTRADA**	1200	2010-2011	FRIZIONE-CLUTCH
DUCATI	**MULTISTRADA ABS**	1200	2010-2013	FRIZIONE-CLUTCH
DUCATI	**MULTISTRADA S ABS**	1200	2010-2011	FRIZIONE-CLUTCH
DUCATI	**MULTISTRADA TOURING ABS**	1200	2010-2011	FRIZIONE-CLUTCH
LE1046*				
KAWASAKI	**GTR**	1400	2007-2011	BRAKE-FRENO
KAWASAKI	**ZZR**	1400	2006-2007	BRAKE-FRENO
KAWASAKI	**ZZR ABS**	1400	2008-2013	BRAKE-FRENO
LE1050*				
SUZUKI	**GSX R HAYABUSA**	1300	2008-2012	FRIZIONE-CLUTCH
LE1052*				
KAWASAKI	**ER6N**	650	2009-2011	FRIZIONE-CLUTCH
KAWASAKI	**ER6N ABS**	650	2009-2011	FRIZIONE-CLUTCH
LE1053*				
KAWASAKI	**ER6N**	650	2009-2011	BRAKE-FRENO
KAWASAKI	**ER6N ABS**	650	2009-2011	BRAKE-FRENO
LE1056*				
YAMAHA	**YZF R1**	1000	2009-2011	BRAKE-FRENO
LE1057*				
YAMAHA	**YZF R1**	1000	2002-2003	BRAKE-FRENO
LE1058*				
YAMAHA	**YZF R1**	1000	1998-2001	BRAKE-FRENO

* articolo in esaurimento / to be discontinued

LEVE SNODABILI NERE - BLACK FOLDING EXTENDABLE LEVER

MARCA BRAND	MODELLO MODEL	CC	ANNO YEAR	POSIZIONE POSITION
LE2001 *				
APRILIA	**RSV R**	1000	2004-2008	FRIZIONE-CLUTHC
DUCATI	**749 R**	748	2004-2006	FRIZIONE-CLUTHC
DUCATI	**749 S**	748	2003-2006	FRIZIONE-CLUTHC
DUCATI	**848 EVO**	850	2011	FRIZIONE-CLUTHC
DUCATI	**STREETFIGHTER**	850	2012-2014	FRIZIONE-CLUTHC
DUCATI	**999 R**	998	2003-2007	FRIZIONE-CLUTHC
DUCATI	**999 S**	998	2003-2007	FRIZIONE-CLUTHC
DUCATI	**MONSTER S4RS**	998	2006-2008	FRIZIONE-CLUTHC
DUCATI	**1098**	1100	2007-2008	FRIZIONE-CLUTHC
DUCATI	**1098 S**	1100	2007-2008	FRIZIONE-CLUTHC
DUCATI	**1098 S TRICOLORE**	1100	2007-2008	FRIZIONE-CLUTHC
DUCATI	**MONSTER 1100**	1100	2009-2010	FRIZIONE-CLUTHC
DUCATI	**MONSTER 1100 ABS**	1100	2010	FRIZIONE-CLUTHC
DUCATI	**MONSTER 1100 S**	1100	2009-2010	FRIZIONE-CLUTHC
DUCATI	**MONSTER 1100 S ABS**	1100	2010	FRIZIONE-CLUTHC
DUCATI	**STREETFIGHTER**	1100	2009-2011	FRIZIONE-CLUTHC
DUCATI	**STREETFIGHTER S**	1100	2009-2011	FRIZIONE-CLUTHC
DUCATI	**1198**	1198	2009-2011	FRIZIONE-CLUTHC
DUCATI	**1198 S**	1198	2009-2010	FRIZIONE-CLUTHC
DUCATI	**1198 SP**	1198	2011	FRIZIONE-CLUTHC
DUCATI	**DIAVEL**	1200	2011	FRIZIONE-CLUTHC
DUCATI	**DIAVEL CARBON**	1200	2011	FRIZIONE-CLUTHC
LE2002 *				
HONDA	**CBR RR**	600	2007-2013	FRIZIONE-CLUTHC
HONDA	**CBR RR - ABS**	600	2009-2012	FRIZIONE-CLUTHC
HONDA	**CBR RR**	1000	2008-2011	FRIZIONE-CLUTHC
LE2003 *				
HONDA	**CROSSRUNNER**	800	2011-2013	FRIZIONE-CLUTHC
HONDA	**CB 1000 R**	1000	2008-2009	FRIZIONE-CLUTHC
HONDA	**CBR RR**	1000	2004-2007	FRIZIONE-CLUTHC
LE2006 *				
SUZUKI	**GSX F**	650	2011	FRIZIONE-CLUTHC
SUZUKI	**GSX R**	1000	2007-2008	FRIZIONE-CLUTHC
LE2007 *				
YAMAHA	**YZF R1**	1000	1998-2011	FRIZIONE-CLUTHC
LE2008 *				
APRILIA	**RSV R**	1000	2004-2008	FRENO-BRAKE
DUCATI	**749 R**	748	2004-2006	FRENO-BRAKE
DUCATI	**749 S**	748	2003-2006	FRENO-BRAKE
DUCATI	**848 EVO**	850	2011	FRENO-BRAKE
DUCATI	**STREETFIGHTER**	850	2012-2014	FRENO-BRAKE
DUCATI	**999 R**	998	2003-2007	FRENO-BRAKE
DUCATI	**999 S**	998	2003-2007	FRENO-BRAKE
DUCATI	**MONSTER S4RS**	998	2006-2008	FRENO-BRAKE
DUCATI	**1098**	1100	2007-2008	FRENO-BRAKE
DUCATI	**1098 S**	1100	2007-2008	FRENO-BRAKE
DUCATI	**1098 S TRICOLORE**	1100	2007-2008	FRENO-BRAKE
DUCATI	**MONSTER 1100**	1100	2009-2010	FRENO-BRAKE
DUCATI	**MONSTER 1100 ABS**	1100	2010	FRENO-BRAKE
DUCATI	**MONSTER 1100 S**	1100	2009-2010	FRENO-BRAKE
DUCATI	**MONSTER 1100 S ABS**	1100	2010	FRENO-BRAKE
DUCATI	**STREETFIGHTER**	1100	2009-2011	FRENO-BRAKE
DUCATI	**STREETFIGHTER S**	1100	2009-2011	FRENO-BRAKE
DUCATI	**1198**	1198	2009-2011	FRENO-BRAKE
DUCATI	**1198 S**	1198	2009-2010	FRENO-BRAKE
DUCATI	**1198 SP**	1198	2011	FRENO-BRAKE
DUCATI	**DIAVEL**	1200	2011	FRENO-BRAKE
DUCATI	**DIAVEL CARBON**	1200	2011	FRENO-BRAKE
LE2009 *				
HONDA	**CBR RR**	600	2007-2013	FRENO-BRAKE
HONDA	**CBR RR - ABS**	600	2009-2012	FRENO-BRAKE
HONDA	**CB 1000 R**	1000	2008-2009	FRENO-BRAKE
HONDA	**CBR RR**	1000	2004-2011	FRENO-BRAKE
LE2011 *				
SUZUKI	**GSX R**	750	2004-2007	FRENO-BRAKE
SUZUKI	**GSX R**	1000	2005-2008	FRENO-BRAKE
LE2012 *				
YAMAHA	**YZF R1**	1000	2004-2008	FRENO-BRAKE
LE2013 *				
BMW	**K 1200 R**	1200	2005-2008	FRIZIONE-CLUTHC
BMW	**K 1200 S / ABS**	1200	2005-2011	FRIZIONE-CLUTHC
BMW	**R 1200 GS**	1200	2004-2011	FRIZIONE-CLUTHC
BMW	**R 1200 GS - ABS**	1200	2004-2011	FRIZIONE-CLUTHC
BMW	**R 1200 GS ADVENTURE**	1200	2006-2008	FRIZIONE-CLUTHC
BMW	**R 1200 R**	1200	2006-2012	FRIZIONE-CLUTHC
BMW	**R 1200 S**	1200	2005-2009	FRIZIONE-CLUTHC
BMW	**R 1200 ST**	1200	2006-2008	FRIZIONE-CLUTHC
BMW	**K 1300 R - ABS**	1300	2008-2011	FRIZIONE-CLUTHC
LE2015 *				
BMW	**F 650 GS**	800	2009-2011	FRIZIONE-CLUTHC
BMW	**F 650 GS ABS**	800	2009-2011	FRIZIONE-CLUTHC
BMW	**F 800 GS**	800	2009-2011	FRIZIONE-CLUTHC
BMW	**F 800 S**	800	2006-2010	FRIZIONE-CLUTHC
BMW	**F 800 ST**	800	2006-2011	FRIZIONE-CLUTHC
LE2016 *				
HONDA	**CB F HORNET**	600	2003-2006	FRIZIONE-CLUTHC
HONDA	**CBR F**	600	1987-2007	FRIZIONE-CLUTHC
HONDA	**NC S**	700	2012-2013	FRIZIONE-CLUTHC
HONDA	**NC S ABS**	700	2012-2013	FRIZIONE-CLUTHC
HONDA	**NC X**	700	2012-2013	FRIZIONE-CLUTHC
HONDA	**NC X ABS**	700	2012-2013	FRIZIONE-CLUTHC
HONDA	**NC S DCT**	750	2014	FRIZIONE-CLUTHC
HONDA	**NC X**	750	2014	FRIZIONE-CLUTHC
HONDA	**NC X DCT**	750	2014	FRIZIONE-CLUTHC
HONDA	**CB F HORNET**	900	2003-2008	FRIZIONE-CLUTHC
HONDA	**CBR RR**	900	1993-1999	FRIZIONE-CLUTHC
LE2018 *				
YAMAHA	**XP T-MAX**	500	2001-2007	FRIZIONE-CLUTHC
LE2019 *				
BMW	**K 1200 R**	1200	2005-2006	FRENO-BRAKE
BMW	**K 1200 S / ABS**	1200	2005-2006	FRENO-BRAKE
BMW	**R 1200 S**	1200	2005-2006	FRENO-BRAKE
LE2020 *				
BMW	**F 650 GS**	800	2009-2011	FRENO-BRAKE
BMW	**F 650 GS ABS**	800	2009-2011	FRENO-BRAKE
BMW	**F 800 GS**	800	2009-2011	FRENO-BRAKE
BMW	**F 800 S**	800	2006-2010	FRENO-BRAKE
BMW	**F 800 ST**	800	2006-2011	FRENO-BRAKE
BMW	**K 1200 R**	1200	2007-2008	FRENO-BRAKE
BMW	**K 1200 S / ABS**	1200	2007-2011	FRENO-BRAKE
BMW	**R 1200 GS**	1200	2004-2011	FRENO-BRAKE
BMW	**R 1200 GS - ABS**	1200	2004-2011	FRENO-BRAKE
BMW	**R 1200 GS ADVENTURE**	1200	2006-2008	FRENO-BRAKE
BMW	**R 1200 R**	1200	2006-2012	FRENO-BRAKE
BMW	**R 1200 S**	1200	2007-2009	FRENO-BRAKE
BMW	**R 1200 ST**	1200	2006-2008	FRENO-BRAKE
BMW	**K 1300 R - ABS**	1300	2008-2011	FRENO-BRAKE
LE2022 *				
HONDA	**CB F HORNET**	600	2003-2006	FRENO-BRAKE
HONDA	**CBR F**	600	1987-2007	FRENO-BRAKE
HONDA	**NC S**	700	2012-2013	FRENO-BRAKE
HONDA	**NC S ABS**	700	2012-2013	FRENO-BRAKE
HONDA	**NC X**	700	2012-2013	FRENO-BRAKE
HONDA	**NC X ABS**	700	2012-2013	FRENO-BRAKE
HONDA	**NC S DCT**	750	2014	FRENO-BRAKE
HONDA	**NC X**	750	2014	FRENO-BRAKE
HONDA	**NC X DCT**	750	2014	FRENO-BRAKE
HONDA	**CROSSRUNNER**	800	2011-2013	FRENO-BRAKE
HONDA	**CB F HORNET**	900	2003-2008	FRENO-BRAKE
HONDA	**CBR RR**	900	1993-1999	FRENO-BRAKE
KAWASAKI	**VERSYS**	1000	2012	FRENO-BRAKE
LE2023 *				
SUZUKI	**GSX F**	650	2011	FRENO-BRAKE
SUZUKI	**GSX R HAYABUSA**	1300	2008-2012	FRENO-BRAKE
LE2025 *				
YAMAHA	**XP T-MAX**	500	2001-2007	FRENO-BRAKE
LE2029 *				
BMW	**S 1000 RR**	1000	2010-2012	FRIZIONE-CLUTHC
LE2030 *				
DUCATI	**MONSTER S4R**	996	2003-2006	FRIZIONE-CLUTHC
DUCATI	**MULTISTRADA DS**	1100	2007-2010	FRIZIONE-CLUTHC
DUCATI	**MULTISTRADA DS S**	1100	2007-2010	FRIZIONE-CLUTHC
LE2031 *				
DUCATI	**MONSTER**	696	2008-2011	FRIZIONE-CLUTHC
LE2033 *				
DUCATI	**848**	850	2008-2010	FRIZIONE-CLUTHC
DUCATI	**848 EVO**	850	2012	FRIZIONE-CLUTHC
DUCATI	**HYPERMOTARD**	1100	2007-2009	FRIZIONE-CLUTHC
DUCATI	**HYPERMOTARD EVO**	1100	2010-2012	FRIZIONE-CLUTHC
DUCATI	**HYPERMOTARD EVO SP**	1100	2010-2012	FRIZIONE-CLUTHC
DUCATI	**HYPERMOTARD S**	1100	2007-2009	FRIZIONE-CLUTHC
DUCATI	**MONSTER EVO**	1100	2011-2012	FRIZIONE-CLUTHC
DUCATI	**STREETFIGHTER S**	1100	2012	FRIZIONE-CLUTHC
DUCATI	**DIAVEL**	1200	2012	FRIZIONE-CLUTHC
DUCATI	**MULTISTRADA**	1200	2012	FRIZIONE-CLUTHC
DUCATI	**PANIGALE**	1200	2012-2013	FRIZIONE-CLUTHC
DUCATI	**PANIGALE ABS**	1200	2012	FRIZIONE-CLUTHC
DUCATI	**PANIGALE S**	1200	2012-2013	FRIZIONE-CLUTHC
DUCATI	**PANIGALE S ABS**	1200	2012-2013	FRIZIONE-CLUTHC
DUCATI	**PANIGALE S TRICOLORE**	1200	2012-2013	FRIZIONE-CLUTHC
MV AGUSTA	**F4 RR CORSACORTA**	1000	2011-2012	FRIZIONE-CLUTHC
LE2035 *				
APRILIA	**RSV4 FACTORY**	1000	2009	FRIZIONE-CLUTHC
APRILIA	**RSV4 FACTORY APRC**	1000	2011	FRIZIONE-CLUTHC
APRILIA	**RSV4 R**	1000	2010	FRIZIONE-CLUTHC
APRILIA	**TUONO V4 R**	1000	2011	FRIZIONE-CLUTHC
APRILIA	**TUONO V4 R APRC**	1000	2011	FRIZIONE-CLUTHC
LE2037 *				
APRILIA	**TUONO V4 R**	1000	2011	FRENO-BRAKE
APRILIA	**TUONO V4 R APRC**	1000	2011	FRENO-BRAKE
DUCATI	**MONSTER S4R**	996	2003-2006	FRENO-BRAKE
DUCATI	**MULTISTRADA DS**	1100	2007-2010	FRENO-BRAKE
DUCATI	**MULTISTRADA DS S**	1100	2007-2010	FRENO-BRAKE
LE2038 *				
DUCATI	**MONSTER**	696	2008-2011	FRENO-BRAKE
LE2040 *				
DUCATI	**848**	850	2008-2010	FRENO-BRAKE
DUCATI	**848 EVO**	850	2012	FRENO-BRAKE
DUCATI	**HYPERMOTARD**	1100	2007-2009	FRENO-BRAKE
DUCATI	**HYPERMOTARD EVO**	1100	2010-2012	FRENO-BRAKE
DUCATI	**HYPERMOTARD EVO SP**	1100	2010-2012	FRENO-BRAKE
DUCATI	**HYPERMOTARD S**	1100	2007-2009	FRENO-BRAKE
DUCATI	**MONSTER EVO**	1100	2011-2012	FRENO-BRAKE
DUCATI	**STREETFIGHTER S**	1100	2012	FRENO-BRAKE
DUCATI	**DIAVEL**	1200	2012	FRENO-BRAKE
DUCATI	**MULTISTRADA**	1200	2012	FRENO-BRAKE
DUCATI	**PANIGALE**	1200	2012-2013	FRENO-BRAKE
DUCATI	**PANIGALE ABS**	1200	2012	FRENO-BRAKE
DUCATI	**PANIGALE S**	1200	2012-2013	FRENO-BRAKE
DUCATI	**PANIGALE S ABS**	1200	2012-2013	FRENO-BRAKE
DUCATI	**PANIGALE S TRICOLORE**	1200	2012-2013	FRENO-BRAKE
LE2042 *				
KAWASAKI	**GTR**	1400	2007-2011	FRIZIONE-CLUTHC
KAWASAKI	**ZZR**	1400	2006-2007	FRIZIONE-CLUTHC
KAWASAKI	**ZZR ABS**	1400	2008-2013	FRIZIONE-CLUTHC
LE2043 *				
SUZUKI	**GSX R**	750	2004-2005	FRIZIONE-CLUTHC
LE2044 *				
DUCATI	**MULTISTRADA**	1200	2010-2011	FRIZIONE-CLUTHC
DUCATI	**MULTISTRADA ABS**	1200	2010-2013	FRIZIONE-CLUTHC
DUCATI	**MULTISTRADA S ABS**	1200	2010-2011	FRIZIONE-CLUTHC
DUCATI	**MULTISTRADA TOURING ABS**	1200	2010-2011	FRIZIONE-CLUTHC
LE2045 *				
APRILIA	**RSV4 FACTORY**	1000	2009	FRENO-BRAKE
APRILIA	**RSV4 FACTORY APRC**	1000	2011	FRENO-BRAKE
APRILIA	**RSV4 R**	1000	2010	FRENO-BRAKE
DUCATI	**MULTISTRADA**	1200	2010-2011	FRENO-BRAKE
DUCATI	**MULTISTRADA ABS**	1200	2010-2013	FRENO-BRAKE
DUCATI	**MULTISTRADA S ABS**	1200	2010-2011	FRENO-BRAKE
DUCATI	**MULTISTRADA TOURING ABS**	1200	2010-2011	FRENO-BRAKE
MV AGUSTA	**F4 RR CORSACORTA**	1000	2011-2012	FRENO-BRAKE
LE2046 *				
KAWASAKI	**GTR**	1400	2007-2011	FRENO-BRAKE
KAWASAKI	**ZZR**	1400	2006-2007	FRENO-BRAKE
KAWASAKI	**ZZR ABS**	1400	2008-2013	FRENO-BRAKE
LE2050 *				
SUZUKI	**GSX R HAYABUSA**	1300	2008-2012	FRIZIONE-CLUTHC
LE2052 *				
KAWASAKI	**ER6N**	650	2009-2011	FRIZIONE-CLUTHC
KAWASAKI	**ER6N ABS**	650	2009-2011	FRIZIONE-CLUTHC
LE2053 *				
KAWASAKI	**ER6N**	650	2009-2011	FRENO-BRAKE
KAWASAKI	**ER6N ABS**	650	2009-2011	FRENO-BRAKE
LE2056 *				
YAMAHA	**YZF R1**	1000	2009-2011	FRENO-BRAKE
LE2057 *				
YAMAHA	**YZF R1**	1000	2002-2003	FRENO-BRAKE
LE2058 *				
YAMAHA	**YZF R1**	1000	1998-2001	FRENO-BRAKE

KIT RICAMBIO POMPE E LEVE / MASTER CYLINDERS AND LEVERS REPLACEMENT KIT

1159.04.1244
- Kit ricambio braccialetto pompa senza specchietto
- Replacement kit clamp without mirror for radial master cylinder ONLY FOR THOSE WITHOUT RESERVOIR

1872.04.2428
- Kit ricambio braccialetto pompa per specchietto
- Replacement kit clamp with mirror for radial master cylinder ONLY FOR THOSE WITHOUT RESERVOIR

AC004
- Kit ricambio vite sensore STOP doppio occhiello (NO MODELLI BMW)
- Replacement kit stop switch screw for double banjo (NO BMW MODEL)

MC013
- Kit ricambio vite sensore STOP singolo occhiello (NO MODELLI BMW)
- Replacement kit stop switch screw for single banjo (NO BMW MODEL)

KR0024
- Kit ricambio rinvio sinistro regolazione leva
- Replacement kit left regulation for lever

KR0076
- Kit ricambio spurgo+gommino per pompe radiali MC1601- MR1601/2-MR1901/2
- Replacement kit bleeder and bleeder cover for radial master cylinder MC1601- MR1601/2-MR1901/2

KR0077
- Kit ricambio idraulica Ø16 per pompe MC1601-MC1602-MR1601-MR1602
- Hydraulic replacement kit Ø16 for radial master cylinder MC1601-MC1602-MR1601-MR1602

KR0078
- Kit ricambio idraulico Ø19 per pompe MC1901-MC1902-MR1901-MR1902
- Hydraulic replacement kit Ø19 for radial master cylinder MC1901-MC1902-MR1901-MR1902

KR0079
- Kit ricambio leva corta per pompe radiali MC1601-MC1602
- Replacement kit short lever for radial master cylinder MC1601-MC1602

KR0080
- Kit ricambio leva lunga per pompe radiali MC1901-MC1902
- Replacement kit long lever for radial master cylinder MC1901-MC1902

KR0081
- Kit ricambio coperchio per pompe radiali con vaschetta integrata MC1601-MC1901-MR1601-MR1901
- Replacement kit cover for radial master cylinder with integrated reservoir MC1601-MC1901-MR1601-MR1901

KR0082
- Kit ricambio perno regolazione leva per pompe radiali MC1601/2-MC1901/2-MR1601/2-MR1901/2
- Replacement kit lever regulation pin for radial master cylinder MC1601/2-MC1901/2-MR1601/2-MR1901/2

KR0083
- Kit ricambio attacco tubo carico per pompe radiali MC1602-MC1902-MR1602-MR1902
- Replacement kit nipple for radial master cylinder without reservoir MC1602-MC1902-MR1602-MR1902

KR0090
- Kit ricambio leva corta snodata per pompe radiali MR1901-MR1902
- Replacement kit folding short lever for radial master cylinder MR1901-MR1902

KR0091
- Kit ricambio leva lunga snodata per pompe radiali MR1601-MR1602
- Replacement kit folding long lever for radial master cylinder MR1601-MR1602

KR0099
- KIT RICAMBIO BRACCIALETTO PER POMPA MC9401/2-MC7401/2-MC5401/2
- Replacement kit clamp for radial master cylinder MC9401/2-MC7401/2-MC5401/2

KR0100
- KIT RICAMBIO ATTACCO TUBO CARICO MC9401/2-MC7401/2-MC5401/2
- Replacement kit nipple for radial master cylinder MC9401/2-MC7401/2-MC5401/2

KR0101
- KIT RICAMBIO SPURGO MC9401/2-MC7401/2-MC5401/2
- Replacement kit bleeder for radial master cylinder MC9401/2-MC7401/2-MC5401/2

KR0102
- KIT RICAMBIO LEVA PER POMPA MC9401-MC7401-MC5401
- Replacement kit lever for radial master cylinder MC9401-MC7401-MC5401

KR0103
- KIT RICAMBIO IDRAULICO Ø19 PER POMPA MC9401/2
- Hydraulic replacement kit Ø19 for radial master cylinder MC9401/2

KR0104
- KIT RICAMBIO CAMMA 'AGGRESSIVE' PER POMPA MC9401/2-MC7401/2-MC5401/2
- Replacement kit 'aggressive' cam for radial master cylinder MC9401/2-MC7401/2-MC5401/2

KR0106L
- Leva sinistra snodata con regolazione per pompe frizione idraluliche BRAKING QC66-QC36 / Brembo racing (NO RCS) 19x20, 16x18, 19x18. * Queste leve hanno la possibilità di montare il rinvio regolazione leva per lato sinistro manubrio.
- Left folding regulating lever for hydraulic clutch - BRAKING QC66-QC36 / Brembo racing (NO RCS) 19x20, 16x18, 19x18. * This lever are the only can mounting the cable of the regulation grip positioning on left side of handle bar

KR0106R
- Leva destra snodata con regolazione per pompe freno Braking MR16-19 - MC96/66/36 / Brembo racing (NO RCS) 19x20, 16x18, 19x18. * Queste leve hanno la possibilità di montare il rinvio regolazione leva per lato sinistro manubrio.
- Right folding regulating lever for BRAKING master cylinder - MR16-19 - MC96-66-36 / Brembo racing (NO RCS) 19x20, 16x18, 19x186. * This lever are the only can mounting the cable of the regulation grip positioning on left side of handle bar

KR0119
- KIT RICAMBIO SPURGO MC9601/3-MC6601/3-MC3601-QC3601/3-QC6601/3
- Replacement kit bleeder for radial master cylinder MC9601/3-MC6601/3-MC3601-QC3601/3-QC6601/3

KR0120
- KIT RICAMBIO IDRAULICO Ø16 PER POMPA MC6601/3
- Hydraulic replacement kit Ø16 for radial master cylinder MC6601/3

KR0121
- KIT RICAMBIO IDRAULICO Ø19 PER POMPA MC9601/3
- Hydraulic replacement kit Ø19 for radial master cylinder MC9601/3

KR0122
- KIT RICAMBIO IDRAULICO Ø13 PER POMPA FRIZIONE QC3601/3-MC3601
- Hydraulic replacement kit Ø13 for clutch radial master cylinder QC3601/3-MC3601

KR0123
- Kit ricambio perno regolazione leva per pompe radiali MC9601/3-MC6601/3-MC3601-MC9401/2-MC7401/2-MC5401/2-QC3601/3-QC6601/3
- Replacement kit lever regulation pin for radial master cylinder MC9601/3-MC6601/3- MC3601-MC9401/2-MC7401/2-MC5401/2-QC3601/3-QC6601/3

KR0124
- KIT RICAMBIO ATTACCO TUBO CARICO MC9601/3-MC6601/3-MC3601-QC3601/3-QC6601/3
- Replacement kit nipple for radial master cylinder MC9601/3-MC6601/3-MC3601-QC3601/3-QC6601/3

KR0125
- Kit ricambio braccialetto pompa senza specchietto MC9601/3-MC6601/3-MC3601-QC6601/3-QC3601/3
- Replacement kit clamp without mirror for radial master cylinder MC9601/3-MC6601/3-MC3601-QC6601/3-QC3601/3 ONLY FOR THOSE WITHOUT RESERVOIR

KR0126
- Kit ricambio leva corta snodata per pompe frizione – QC6601 - QC3601
- Replacement kit folding short lever for radial master cylinder QC6601 - QC3601

KR0127
- Kit ricambio leva lunga snodata per pompe radiali – QC6601 - QC3601
- Replacement kit folding long lever for radial master cylinder QC6601 - QC3601

KR0142
- Kit ricambio serbatoio olio 12cc – QC6601/3-QC3601/3
- Replacement kit oil reservoir 12cc – QC6601/3-QC3601/3

KR0143
- Kit ricambio serbatoio olio 12cc – MC9601/3-MC6601/3 - MC3601
- Replacement kit oil reservoir 12cc – MC9601/3-MC6601/3 - MC3601

KR0144
- Kit ricambio serbatoio olio 35cc – MC9601/3-MC9601/3 - MC3601
- Replacement kit oil reservoir 35cc – MC9601/3 - MC6601/3 - MC3601

KR0145
- Kit ricambio clip e tubo per serbatoio olio – MC9601/3-MC6601/3 - MC3601
- Replacement clips and tube –MC9601/3 – MC6601/3 - MC3601

KR0146
- Kit ricambio regolatore leva – per tutte leve serie LE – KR0106L/R
- Replacement kit for all folding lever – LE – KR0106L/R

KR0147
- Kit ricambio cuscinetto leva – per tutte leve serie LE1 – KR0106L/R
- Replacement kit for lever bearing – LE – KR0106L/R

KR0148
- Kit ricambio leva freno cromato – per leve freno serie LE1 – KR0106R
- Replacement kit transparent brake lever – LE1 series– KR0106R

KR0149
- Kit ricambio leva frizione cromato – per leve frizione serie LE1 – KR0106L
- Replacement kit transparent clucth lever – LE1 series– KR0106L

KR0150
- Kit ricambio leva freno nera – per leve freno serie LE2
- Replacement kit black brake lever – LE2 series

KR0151
- Kit ricambio leva frizione nera – per leve frizione serie LE2
- Replacement kit black clucth lever – LE2series

KR0152
- Kit ricambio pistone ø15 per pompa MC5401/2
- Replacement kit piston ø15 for radial master cylinder MC5401/2

KR0153
- Kit ricambio pistone ø17 per pompa MC7401/2
- Replacement kit piston ø17 for radial master cylinder MC7401/2

KR0180
- Kit ricambio leva allungabile - per leve freno e frizione silver serie LE1
- Replacement extendable lever - for brake and clutch lever LE1 series

KR0181
- Kit ricambio leva allungabile - per leve freno e frizione serie LE2
- Replacement extendable lever - for brake and clutch lever LE1 series

KR0193
- Kit ricambio clip+tubo - per MC6601/3 - QC6601/3 - QC3601/3
- Replacement kit clip and tube - for brake and clutch master cylinder MC6601/3 - QC6601/3 - QC3601/3

KR0194
- Kit ricambio leva completa snodata - per pompe MC9402-MC7402-MC5402
- Replacement kit complete trasparent brake lever - for master cylinder MC9402-MC7402-MC5402

KR0195L
- Leva nera sinistra snodata con regolazione per pompe frizione idraluliche BRAKING QC66-QC36 / Brembo racing (NO RCS) 19x20, 16x18, 19x18. * Queste leve hanno la possibilità di montare il rinvio regolazione leva per lato sinistro manubrio.
- Black Left folding regulating lever for hydraulic clutch - BRAKING QC66-QC36 / Brembo racing (NO RCS) 19x20, 16x18, 19x18. * This lever are the only can mounting the cable of the regulation grip positioning on left side of handle bar

KR0195R
- Leva nera destra snodata con regolazione per pompe freno Braking MR16-19 - MC96/66/36 / Brembo racing (NO RCS) 19x20, 16x18, 19x18. * Queste leve hanno la possibilità di montare il rinvio regolazione leva per lato sinistro manubrio.
- Right folding regulating black lever for BRAKING master cylinder MR16-19 - MC96-66-36 / Brembo racing (NO RCS) 19x20, 16x18, 19x186. * This lever are the only can mounting the cable of the regulation grip positioning on left side of handle bar

REPLACEMENT FOR B-ONE AND B-WHEEL / KIT RICAMBIO B-ONE E B-WHEEL

B-WHEEL REPLACEMENT DISKS / RICAMBIO DISCHI PER B-WHEEL

B-WHEEL	RICAMBIO REPLACEMENTS	Ø
BW3548	STW11D	Ø292
BW4501	SKW06LD / RD	Ø310
BW4502	SKW06LD / RD	Ø310
BW4503	SKW07LD / RD	Ø320
BW4507	SKW04LD / RD	Ø300
BW4510	SKW06LD / RD	Ø310
BW4512	SKW07LD / RD	Ø320
BW4513	SKW04LD / RD	Ø300
BW4514	SKW04LD / RD	Ø300
BW4515	SKW01LD / RD	Ø280
BW4517	SKW06LD / RD	Ø310
BW4522	SKW04LD / RD	Ø300
BW4532	SKW07LD / RD	Ø320
BW4538	SKW04LD / RD	Ø300
BW4545	SKW06LD / RD	Ø310
BW4555	SKW07LD / RD	Ø320
BW4556	SKW07LD / RD	Ø320

B-ONE REAR DISC / DISCHI POSTERIORI B-ONE

DIAMETRO DIAMETER	CODICE DISCO DISK P/N
220mm	B1220D
240mm	B1240D
245mm	B1245D
250mm	B1250D
256mm	B1256D
267mm	B1267D

B-ONE SPROCKETS / CORONE B-ONE

MISURE CATENA SIZE CHAIN	DENTATURE DISPONIBILI AVAILABLE TEETH SIZE	CODICE P/N
520	36 > 50	5-3216
525	39 > 47	5-4216
530	39 > 47	5-5216

To make the complete p/n of the replacement rear sprocket add the number of teeth to the sprocket p/n. Ex: Rear sprocket 520 szie with 42 teeth, the complete p/n is 5-3216-42.

Per comporre i codici corona aggiungere al codice corona la dentatura desiderata. Esempio: Corona misura 520 a 42 denti, il codice è 5-3216-42.

B-ONE - B-WHEEL REPLACEMENT KIT / KIT RICAMBIO PER B-ONE - B-WHEEL

KR0028
- Kit distanziali per B13501
- Spacers kit for B13501

KR0029
- Kit distanziali per B13502-B13532-B13547
- Spacers kit for B13502-B13532-B13547

KR0030
- Kit distanziali per B13503-B13507-B13510
- Spacers kit for B13503-B13507-B13510

KR0031
- Kit distanziali per B13504
- Spacers kit for B13504

KR0032
- kit distanziali per B13505
- Spacers kit for B13505

KR0033
- Kit distanziali per B13506
- Spacers kit for B13506

KR0034
- Kit distanziali per B13508
- B13513-Spacers kit for B13508-B13513

KR0035
- Kit distanziali per B13509
- Spacers kit for B13509

KR0036
- Kit distanziali per B13512
- Spacers kit for B13512

KR0037
- Kit distanziali per B13514
- Spacers kit for B13514

KR0038
- Kit distanziali per B13515
- B13522-B13538-Spacers kit for B13515-B13522-B13538

KR0039
- Kit distanziali per B13517
- Spacers kit for B13517

KR0040
- Kit distanziali per B13518
- Spacers kit for B13518

KR0041
- Kit distanziali per B13519
- Spacers kit for B13519

KR0042
- Kit distanziali per B13524
- Spacers kit for B13524

KR0043
- Kit distanziali per B13525
- Spacers kit for B13525

KR0044
- Kit distanziali per B13537
- Spacers kit for B13537

KR0045
- Kit distanziali per B13545
- Spacers kit for B13545

KR0046
- Kit distanziali per B13548
- Spacers kit for B13548

KR0047
- Kit distanziali per B13555
- Spacers kit for B13555

KR0048
- Kit distanziali per B13556
- Spacers kit for B13556

KR0049
- Kit parapolvere per B-ONE - B-WHEEL
- Dust cover kit for B-ONE - B-WHEEL

KR0050
- Cuscinetti per tutti i modelli B-ONE / B-WHEEL anteriori
- Bearing for front B-ONE / B-WHEEL

KR0051
- Cuscinetti per tutti modelli B-ONE posteriori
- Bearing for rear B-ONE

KR0052
- Parastrappi per tutti modelli B-ONE posteriori
- Torque absorbe system for all rear B-ONE

KR0053
- Kit distanziali per B15501
- Spacers kit for B15501

KR0054
- Kit distanziali per B15504
- Spacers kit for B15504

KR0055
- Kit distanziali per B15505-B15510-B15516
- Spacers kit for B15505-B15510-B15516

KR0056
- Kit distanziali per B15506
- Spacers kit for B15506

KR0057
- Kit distanziali per B15508-B15512
- Spacers kit for B15508-B15512

KR0058
- Kit distanziali per B15509
- Spacers kit for B15509

KR0059
- Kit distanziali per B15511-B15533-B15540-B15543-B15557-B16017-B16041-B16044
- Spacers kit for B15511-B15533-B15540-B15543-B15557-B16017-B16041-B16044

KR0060
- Kit distanziali per B15515
- Spacers kit for B15515

KR0061
- Kit distanziali per B15518-B16014-B16036-B16049
- Spacers kit for B15518-B16014-B16036-B16049

KR0062
- Kit distanziali per B15522
- Spacers kit for B15522

KR0063
- Kit distanziali per B15537
- Spacers kit for B15537

KR0064
- Kit distanziali per B15545
- Spacers kit for B15545

KR0065
- Kit distanziali per B15546
- Spacers kit for B15546

KR0066
- Kit distanziali per B15548
- Spacers kit for B15548

KR0067
- Kit distanziali per B15554
- Spacers kit for B15554

KR0068
- Kit distanziali per B16002-B16032
- Spacers kit for B16002-B16032

KR0069
- Kit distanziali per B16003-B16050
- Spacers kit for B16003-B16050

KR0070
- Kit distanziali per B16019
- Spacers kit for B16019

KR0071
- Kit distanziali per B16025
- Spacers kit for B16025

KR0072
- Kit distanziali per B16038
- Spacers kit for B16038

KR0073
- Kit distanziali per B16039
- Spacers kit for B16039

KR0074
- Kit distanziali per B16047
- Spacers kit for B16047

KR0075
- Kit distanziali per B16055
- Spacers kit for B16055

KR0177
- SUPPORTO PER B-ONE POSTERIORE - Per codici B15511 - B15540 - B16017
- BRACKET FOR REAR B-ONE - For p/n B15511 - B15540 - B16017

TUBO PTFE (da abbinare esclusivamente a raccordi RX) / PTFE TUBE (use only with RX fittings)

Tubo PTFE intestato per attacco diretto raccordi / Pre fitted line for direct fitting

	COLORE /COLOUR			
MISURA/SIZE	BLU/BLUE	CARBON LOOK	ROSSO/RED	TRASPARENTE/TRANSPARENT
15 cm	TX015B	TX015C	TX015R	TX015T
20 cm	TX020B	TX020C	TX020R	TX020T
25 cm	TX025B	TX025C	TX025R	TX025T
30 cm	TX030B	TX030C	TX030R	TX030T
35 cm	TX035B	TX035C	TX035R	TX035T
40 cm	TX040B	TX040C	TX040R	TX040T
45 cm	TX045B	TX045C	TX045R	TX045T
50 cm	TX050B	TX050C	TX050R	TX050T
55 cm	TX055B	TX055C	TX055R	TX055T
60 cm	TX060B	TX060C	TX060R	TX060T
65 cm	TX065B	TX065C	TX065R	TX065T
70 cm	TX070B	TX070C	TX070R	TX070T
75 cm	TX075B	TX075C	TX075R	TX075T
80 cm	TX080B	TX080C	TX080R	TX080T
85 cm	TX085B	TX085C	TX085R	TX085T
90 cm	TX090B	TX090C	TX090R	TX090T
95 cm	TX095B	TX095C	TX095R	TX095T
100 cm	TX100B	TX100C	TX100R	TX100T
105 cm	TX105B	TX105C	TX105R	TX105T
110 cm	TX110B	TX110C	TX110R	TX110T
120 cm	TX120B	TX120C	TX120R	TX120T
130 cm	TX130B	TX130C	TX130R	TX130T
140 cm	TX140B	TX140C	TX140R	TX140T
150 cm	TX150B	TX150C	TX150R	TX150T

Tubazione off road dotata di guaina rigida e guaina termoretraibile.
Off road line covered with rigid sheat and thermally adjustable sheats.

MISURA SIZE	TUBO + GUAINA TRASPARENTE TUBE + SHEAT TRASPARENT
120 cm	TX120G
128 cm	TX128G

WSS 2014 Champion
Michael Van Der Mark - Team Pata Honda World Supersport

STAINLESS STEEL FITTINGS / RACCORDI ACCIAIO

Da abbinare esclusivamente a tubi PTFE intestati TX
Use only with pre fitted cut TX lines

RX0001
- Occhiello dritto ø10
- Fitting steel straight banjo ø10

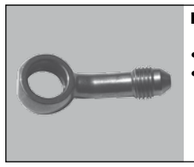

RX0002
- Occhiello 20° ø10
- Fitting steel 20° banjo ø10

RX0003
- Occhiello 45° ø10
- Fitting steel 45° banjo ø10

RX0004
- Occhiello 20° laterale ø10
- Fitting steel 20° side banjo ø10

RX0005
- Occhiello 70° ø10
- Fitting steel 70° banjo ø10

RX0006
- Occhiello 90° ø10
- Fitting steel 90° banjo ø10

RX0007
- Occhiello 90° laterale ø10
- Fitting steel 90° side banjo ø10

RX0008
- Clips
- P-clips

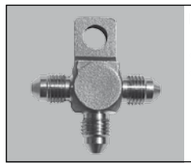

RX0009
- Raccordo a 3 vie
- Tee fitting

RX0010
- Adattatore convesso
- Adaptor to metric convex 10x1

RX0011
- Adattatore convesso
- Adaptor to metric convex 10x1.25

RX0012
- Adattatore concavo
- Adaptor jic to metric concavo 10x1.25

RX0013
- Occhiello inclinato a sinistra 20° ø10
- 20° offset left handed banjo adaptor ø10

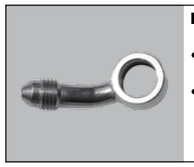

RX0014
- Occhiello inclinato a destra 20° ø10
- 20° offset right handed banjo adaptor ø10

RX0015
- Occhiello inclinato a sinistra 45° ø10
- 45° offset left handed banjo adaptor ø10

RX0016
- Occhiello inclinato a destra 45° ø10
- 45° offset right handed banjo adaptor ø10

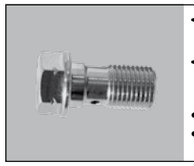

< RN3D008C 10x1 mm
< RN3D008D 10x1,25 mm
- Vite per occhiello
- Banjo bolt

< RN3D009A 10x1 mm
< RN3D009B 10x1,25 mm
- Vite per occhiello doppia
- Double banjo bolt

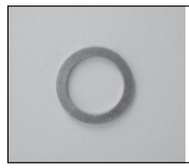

< RN2D011A 13,5x10,5x1 mm
- Rondella in rame
- Cupper washer

CONDIZIONI DI FORNITURA

- **ORDINI -** Si accettano ordini a mezzo fax o email o tramite portale www.braking.com con accesso tramite relativa ID e PASSWORD.
- **PREZZI -** Prezzi consigliati al pubblico IVA esclusa.
- **FORNITURE MINIME -** Per ordini inferiori ad un valore di 150,00 euro, al netto dell' IVA e delle spese accessorie, saranno applicate le condizioni di pagamento Contrassegno o Bonifico anticipato.
- **PAGAMENTI -** Sono da effettuarsi esclusivamente al ns. domicilio di Limbiate, senza sconti o arrotondamenti. Pagamenti a ns. personale non espressamente autorizzato sono a rischio e pericolo del Cliente. Le Rimesse Dirette devono effettuarsi entro 10 gg. dopo la data di scadenza indicata in fattura, salvo accordi contrattuali diversi. Per pagamento ritardato oltre i limiti previsti dalla fattura, verranno addebitati gli interessi nella misura pari agli interessi legali maggiorati di tre punti percentuali e relative spese. La merce resta di proprietà della Sunstar Engineering Italy S.r.l. fino ad estinzione del pagamento.
- **RESA - Ex works c/o TRAVAGLINI LUCIANO S.R.L. Via Lavoratori Autobianchi, 1/A - 20832 DESIO (MB)**
- **TRASPORTO -** Salvo diverso accordo scritto, il trasporto viene organizzato dalla TRAVAGLINI LUCIANO S.r.l. ed effettuato tramite corriere convenzionato. La copertura assicurativa è quella prevista dal trasportatore utilizzato e conforme alla legge in vigore. Il costo del trasporto è addebitato in fattura. Dato che la resa è "EXWorks" rimane inteso che la merce viaggia comunque a rischio e pericolo del committente.
- **RESO MERCE -** Non si accettano Resi Merce se prima non concordati con il ns. Ufficio Commerciale. Per resi causati da errato ordine da parte del cliente e/o agente saranno addebitati Euro 30,00 per spese accessorie e gestionali. Tutti i resi dovranno essere comunque spediti presso il magazzino della Travaglini Luciano S.r.l. di Desio (MB), Via Lavoratori Autobianchi 1/A, 20832 (MB).
- **RECLAMI -** Qualsiasi contestazione relativa a documenti di trasporto e/o fatturazioni errate dovrà essere inoltrata, per iscritto, entro e non oltre 8 gg. dal ricevimento della fornitura.
- **TRATTAMENTO DATI -** Sunstar Engineering Italy S.r.l. è responsabile del trattamento dati ai sensi del D.L. 196/03 - L'informativa completa è disponibile sul sito www.braking.com

Di seguito il riferimento del nostro ufficio commerciale:
ph (+39) 02 97075699 | fax (+39) 02 97075698 | e-mail: info.italia@braking.com

GARANZIA

PREMESSA
La garanzia applicata ai prodotti è la garanzia legale definita dalla legge Italiana in vigore e applicabile. Allo stato attuale questa prevede che, nel caso un prodotto abbia un difetto di conformità il venditore (non il produttore) è responsabile per due anni dalla consegna all'utilizzatore del bene stesso. La Sunstar Engineering Italy S.r.l. (produttore), al fine di fornire un miglior servizio alla rete distributiva garantisce al venditore la stessa garanzia che il venditore deve dare all'utilizzatore originario.

TERMINI
La Sunstar Engineering Italy S.r.l. garantisce che il Prodotto corrisponda alle specifiche indicate dal Produttore stesso ed è privo di difetti nei materiali e nella lavorazione.
Qualora si riscontri un difetto coperto da garanzia, questo deve essere segnalato al venditore entro sessanta (60) giorni dalla sua scoperta.
La segnalazione deve essere effettuata per iscritto e tramite utilizzo dell'apposito modulo e deve essere corredata della **prova d'acquisto dell'utilizzatore originario che identifichi sia il prodotto che la data di acquisto** (sia acquistato al dettaglio che venduto da un rivenditore come parte dell'installazione del Prodotto).
La copertura della garanzia ha una durata limitata di due (2) anni dalla data di acquisto da parte del consumatore (comprovata dalla prova di acquisto).
Il Prodotto che si presume difettoso, dovrà essere restituito alla Sunstar Engineering Italy S.r.l. presso il magazzino della TRAVAGLINI LUCIANO S.R.L. di Via Lavoratori Autobianchi, 1/A - DESIO (MB) - Italia, per il tramite della catena distributiva e con spese a carico del mittente.
La Sunstar Engineering Italy S.r.l. provvederà, in un tempo congruo, a verificare la conformità del prodotto. Nel caso si riscontrino vizi o difettosità dovute al produttore, la Sunstar Engineering Italy S.r.l. provvederà al rimborso anche delle spese di trasporto sostenute dal Cliente.
Nel caso si confermi la presenza di un difetto coperto da garanzia nel Prodotto, questo verrà, a scelta del Cliente, riparato o sostituito con un prodotto nuovo. Il Produttore si riserva la facoltà di non riparare o sostituire il prodotto difettoso ma di rimborsare il Cliente di una cifra pari a quella sostenuta per l'acquisto del bene.

Queste limitazioni di garanzia non si applicano:
- ad alcun danno al prodotto causato, in parte o in toto, da un cattivo utilizzo, incidente, incendio, corrosione chimica, uso per scopi diversi da quelli previsti, utilizzo illecito, impiego su un modello diverso da quello previsto, errata installazione, installazione contraria a quanto indicato dal Produttore, o mancata manutenzione del prodotto secondo quanto prescritto dal Produttore nelle istruzioni fornite
- ossidazione e/o corrosione dovuta agli agenti atmosferici, lavaggio improprio dell'oggetto o cattiva conservazione
- qualora INVECE il reclamo riguardi prestazioni non corrispondenti alle aspettative, rumori e vibrazioni, questo deve essere segnalato entro otto (8) giorni dalla sua scoperta ed entro sei (6) mesi dalla data di acquisto

Il prodotto è stato progettato e realizzato per il modello e l'uso specifico indicato nel catalogo BRAKING disponibile sul sito BRAKING (www.braking.com).

Il prodotto dovrà essere utilizzato secondo le normative in vigore negli stati e/o nei paesi in cui viene utilizzato il veicolo su cui è installato il Prodotto, comprese ma senza limitarsi all'osservanza delle norme del Codice della Strada e previo ottenimento di qualsiasi autorizzazione/omologazione, permesso o patente richiesta dallo stato e/o dal paese.

In particolare, per la normativa vigente in Italia (decreto 147 del 5 agosto 2010), l'utente che installa un componente qualsiasi dell'impianto frenate diverso dall'originale, è tenuto a recarsi presso gli uffici della Motorizzazione Civile per ottenere l'aggiornamento della carta di circolazione.

Il produttore è sollevato da qualsiasi responsabilità in caso di danni e reclami qualora l'utilizzo del Prodotto non rispetti le normative e le leggi vigenti.
Queste Limitazioni di Garanzia devono essere regolate, ed interpretate ed hanno validità in base alla legge italiana.

FORO COMPETENTE
Per qualunque controversia il foro competente sarà quello di Milano.

WAVE® È UN MARCHIO EUROPEO DI PROPRIETÀ DI SUNSTAR SINGAPORE PTE. LTD.

Sunstar Engineering Italy S.r.l.
Via Luciano Manara, 2 - 20812 Limbiate (MB) - Italy
Tel +39 02 97075699 - Fax +39 02 97075698

www.braking.com

info@preprintgrafica.com

SUNSTAR

www.sunstar.com

www.bicycle.braking.com

www.sunstarmoto.com

www.foamply.com

€ 8,00